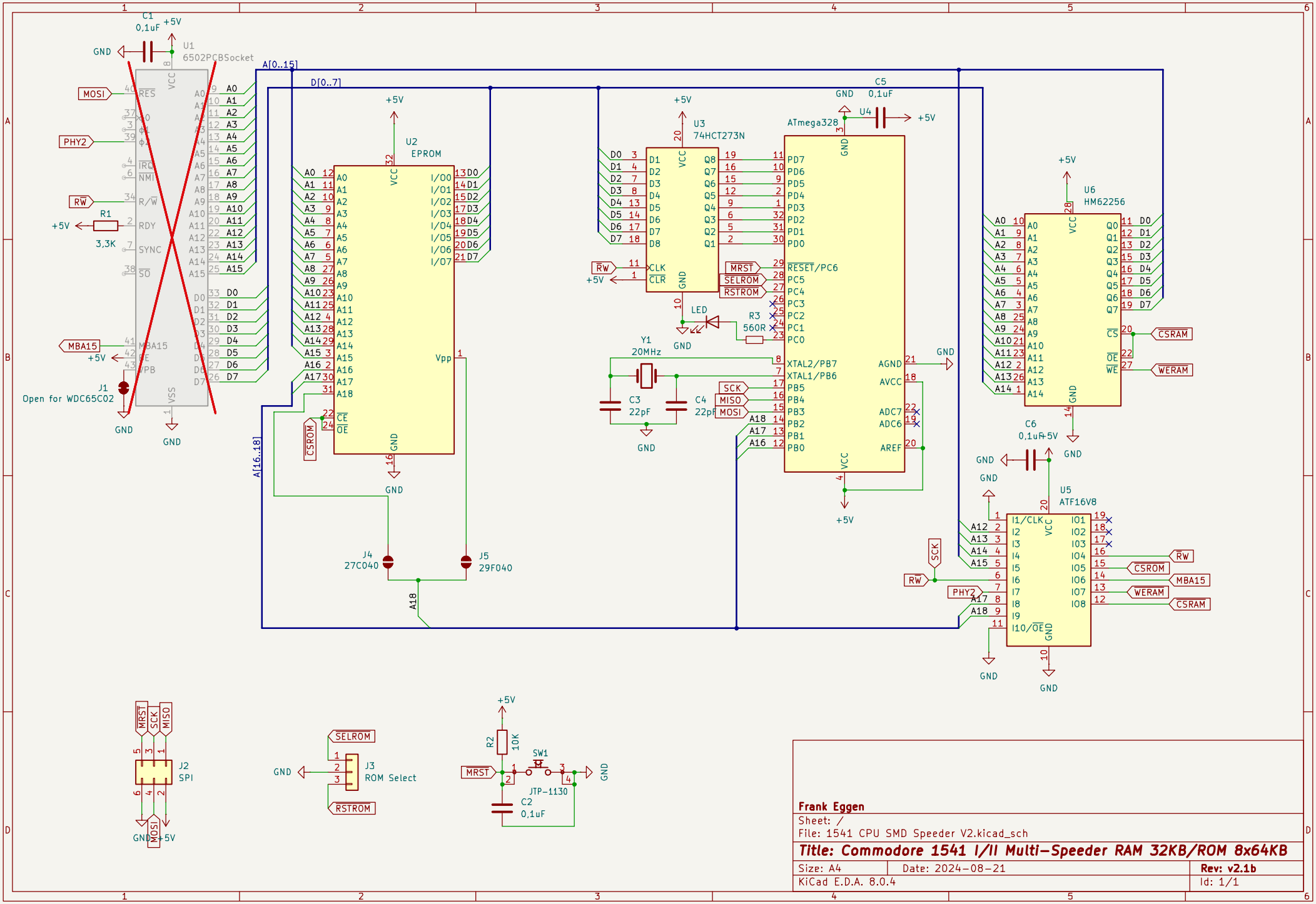

Frank Eggen

Sheet: /

File: 1541 CPU SMD Speeder V2.kicad_sch

Title: Commodore 1541 I/II Multi-Speeder RAM 32KB/ROM 8x64KB

Size: A4	Date: 2024-08-21	**Rev: v2.1b**
KiCad E.D.A. 8.0.4		Id: 1/1