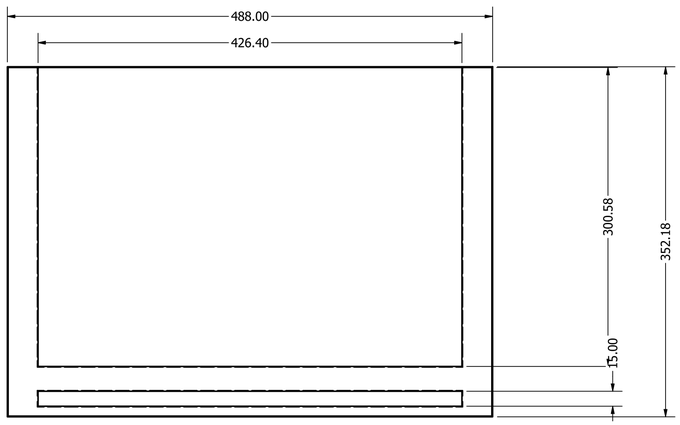

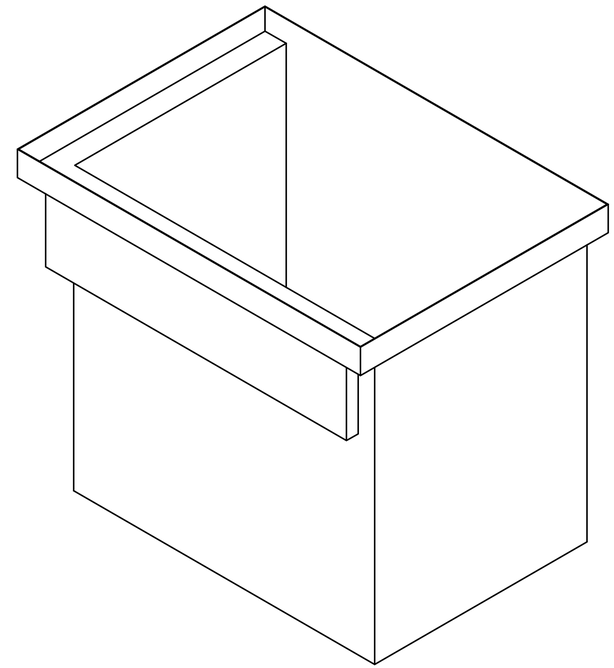

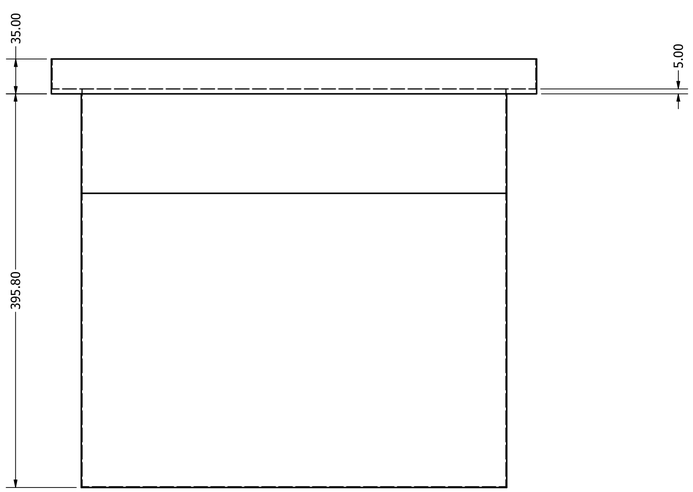

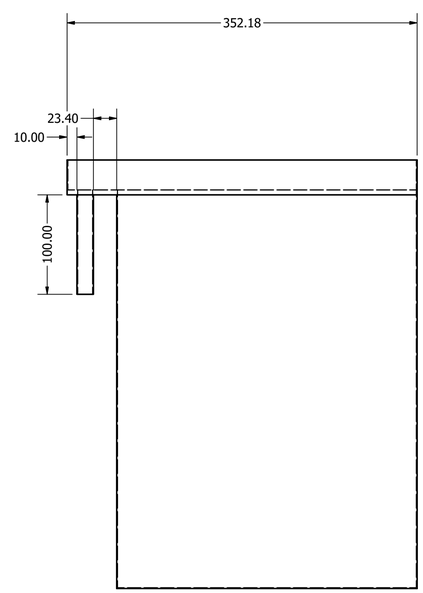

DRAWN Vijay	16-03-2020	
CHECKED		TITLE
QA		
MFG		
APPROVED		SIZE D / DWG NO / REV
		SCALE 1 / 3 / SHEET 1 OF 1