Version List

Version	Change List	Date	Author
1.0.0	First Release	2022-3-21	Miller.zhang
1.1.0	1、C91,C93 NC 2、增加R1 3、增加R41,R43	2022-6-10	Miller.zhang
1.2.0	1、C205从10uF改为22uF	2023-3-1	Miller.zhang

Title	01_Cover	
Size: Custom	Document Number: CV181xH_SIP_BGA	Rev: 1.0.0
Date: Wednesday, March 01, 2023	Sheet 1 of 12	

Block Diagram for CV181xH

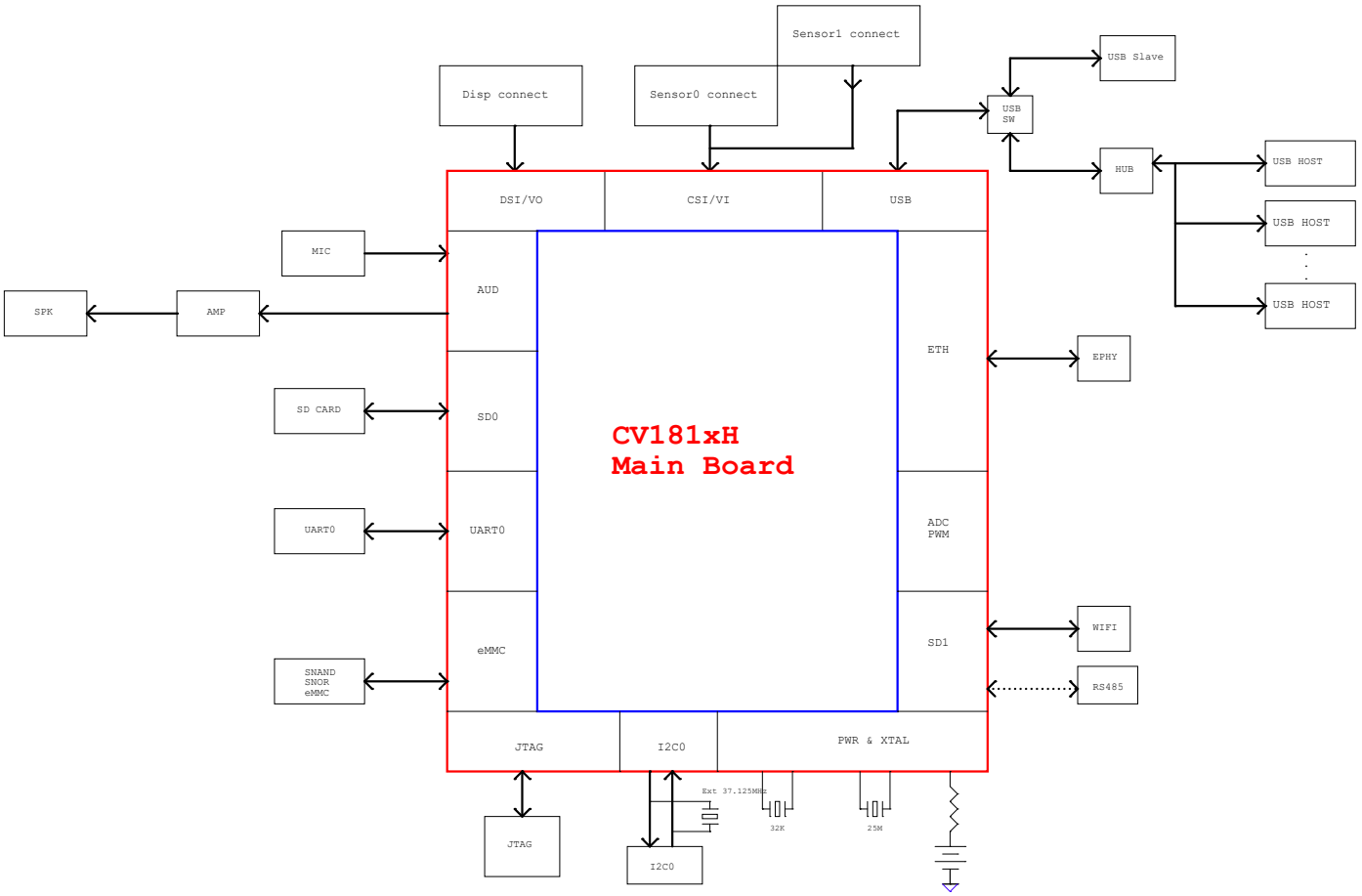

CVITEK		
File: 02_Diagram		
Size: C	Document Number: CV181xH_SIP_BGA	Rev: 0.0.0
Date: Monday, September 19, 2022	Sheet 2 of 12	

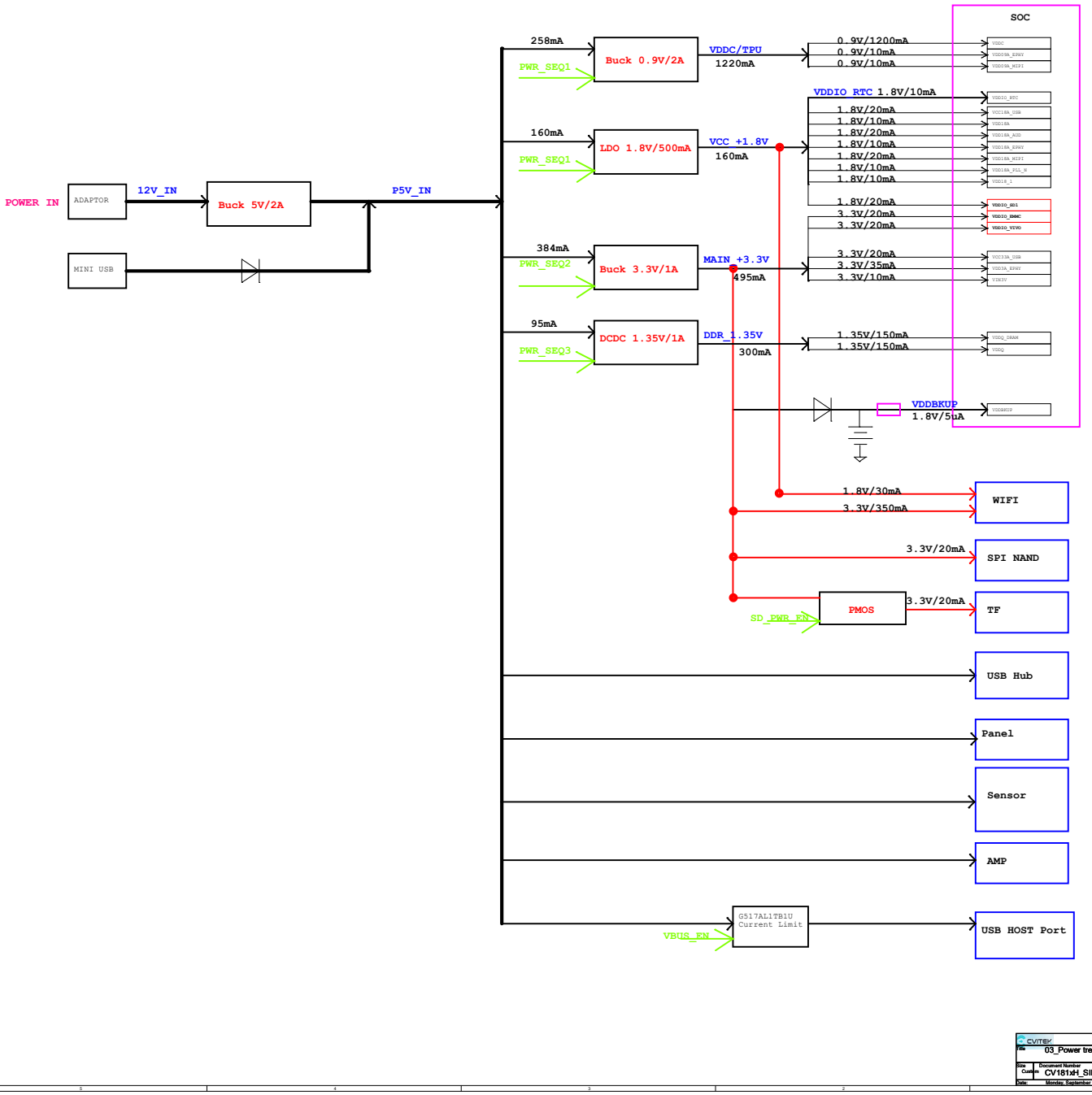

CVITEK			
File: 03_Power tree			
Size:	Document Number: CV181xH_SIP_BGA		Rev: 0.0.0
Date: Monday, September 19, 2022	Sheet 3 of 12		

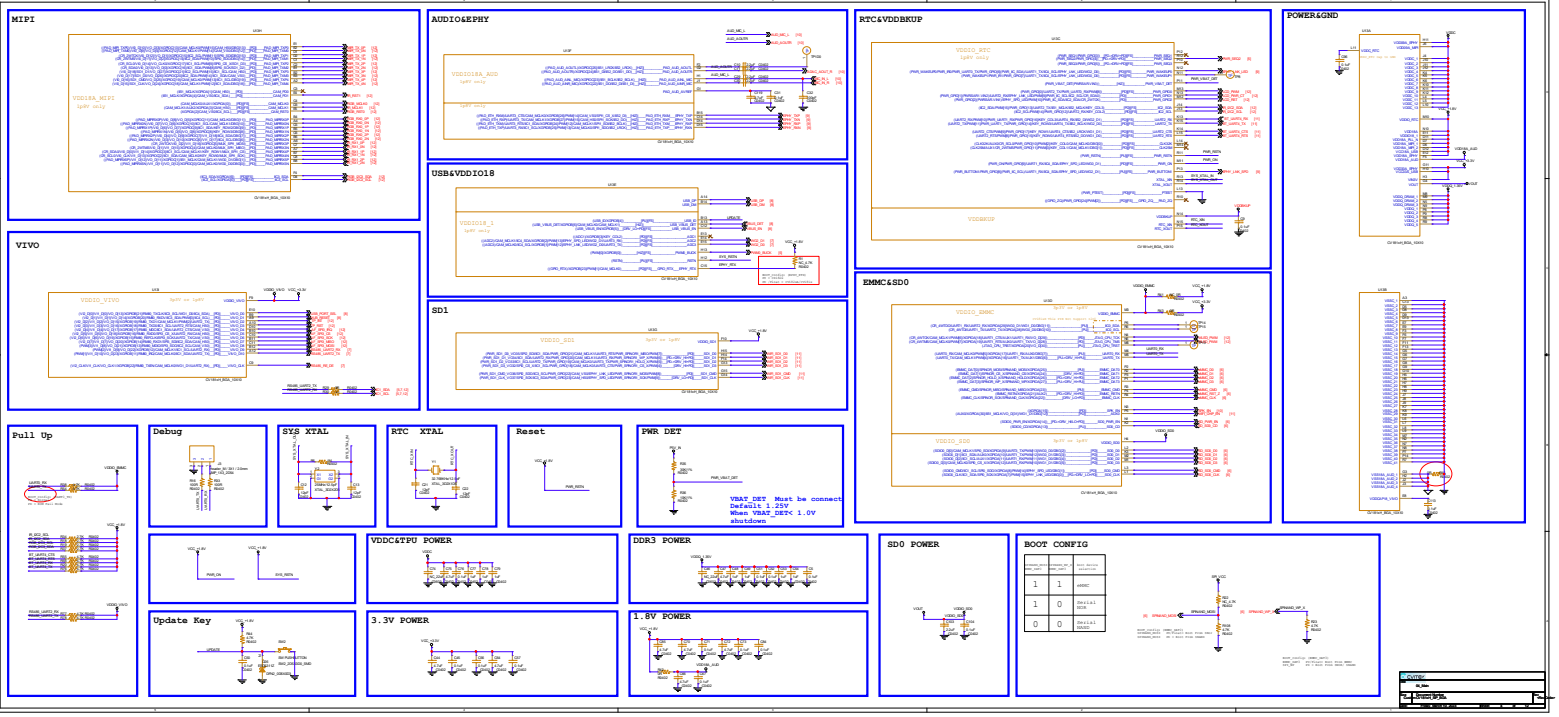
MIPI
AUDIO&EPHY
RTC&VDDBKUP
POWER&GND
VIVO
USB&VDDIO18
SD1
EMMC&SD0
Pull Up
Debug
SYS XTAL
RTC XTAL
Reset
PWR DET
VBAT_DET Must be connect
Default 1.25V
When VBAT_DETC 1.0V
shutdown
VDDC&TPU POWER
DDR3 POWER
SD0 POWER
BOOT CONFIG
Update Key
3.3V POWER
1.8V POWER

Power IN

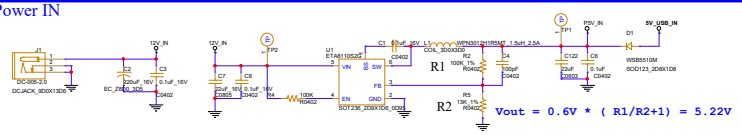

PWR_SEQ02

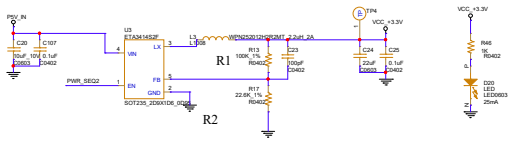

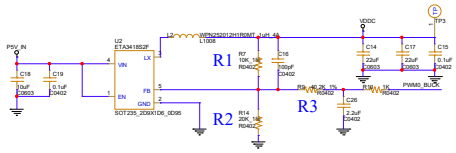

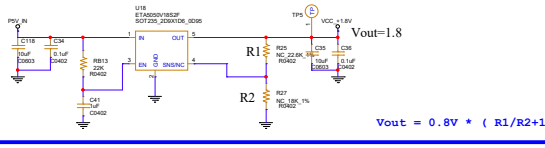

RTC

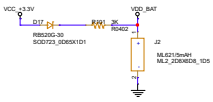

External RTC

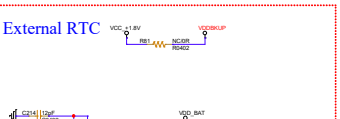

Internal RTC

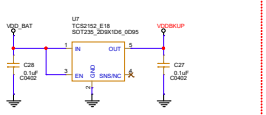

CV1810H:64MB DDR2,VDDQ=1.5V
CV1811H:128MB DDR3,VDDQ=1.35V
CV1812H:256MB DDR3,VDDQ=1.35V
CV1813H:512MB DDR3,VDDQ=1.35V

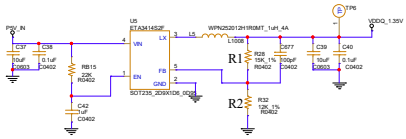

NET

CVITEK

File	05_SYS_Power
Size	Document Number: CV181xH_SIP_BGA
Rev	0.6
Date	Monday, September 19, 2022
Sheet	5 of 12

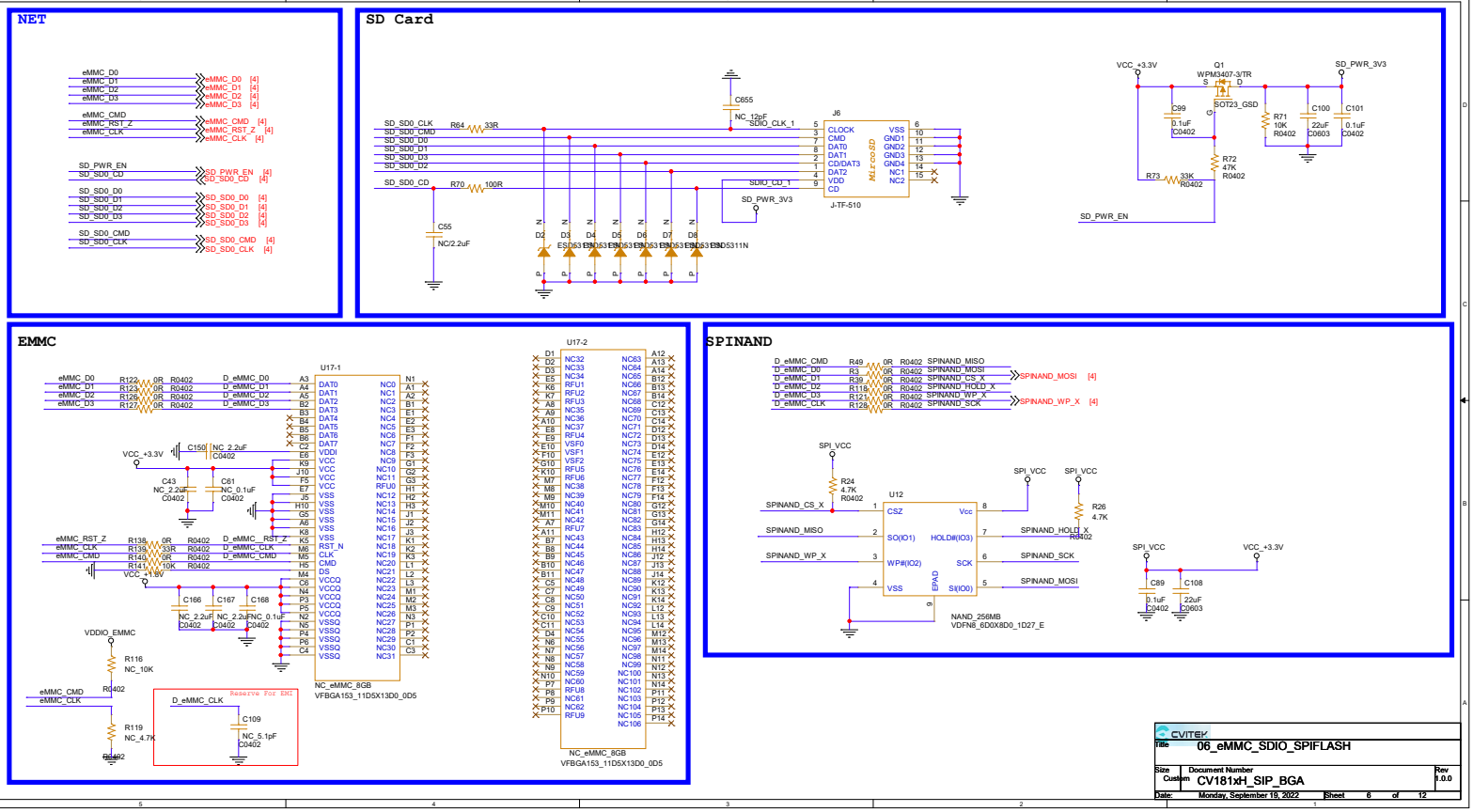

Title	06_eMMC_SDIO_SPIFLASH		
Size	Document Number		Rev
Custom	CV181xH_SIP_BGA		1.0.0
Date:	Monday, September 19, 2022	Sheet 6 of 12	

CViTeK

NET

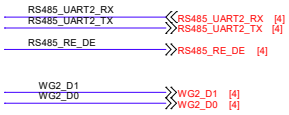

Encryption

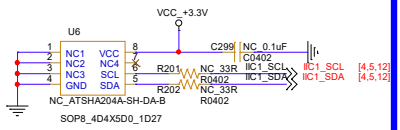

RS485

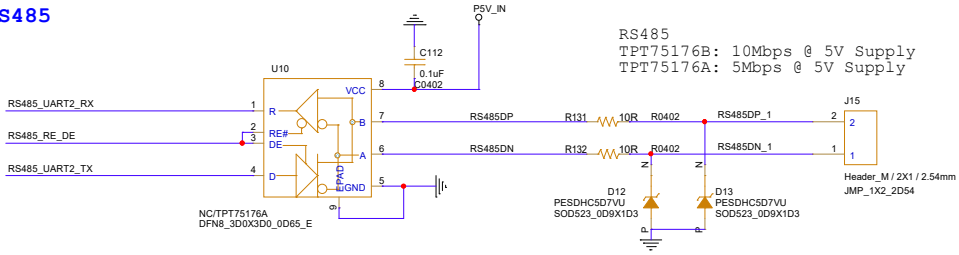

Weigand

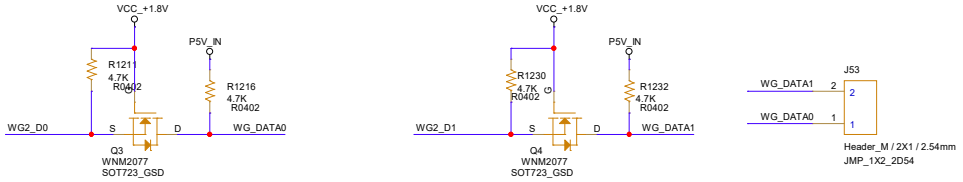

Title	07_UART_WG	
Size: Custom	Document Number: CV181xH_SIP_BGA	Rev: 1.0.0
Date: Monday, September 19, 2022	Sheet 7 of 12	

CViTeK Ltd.

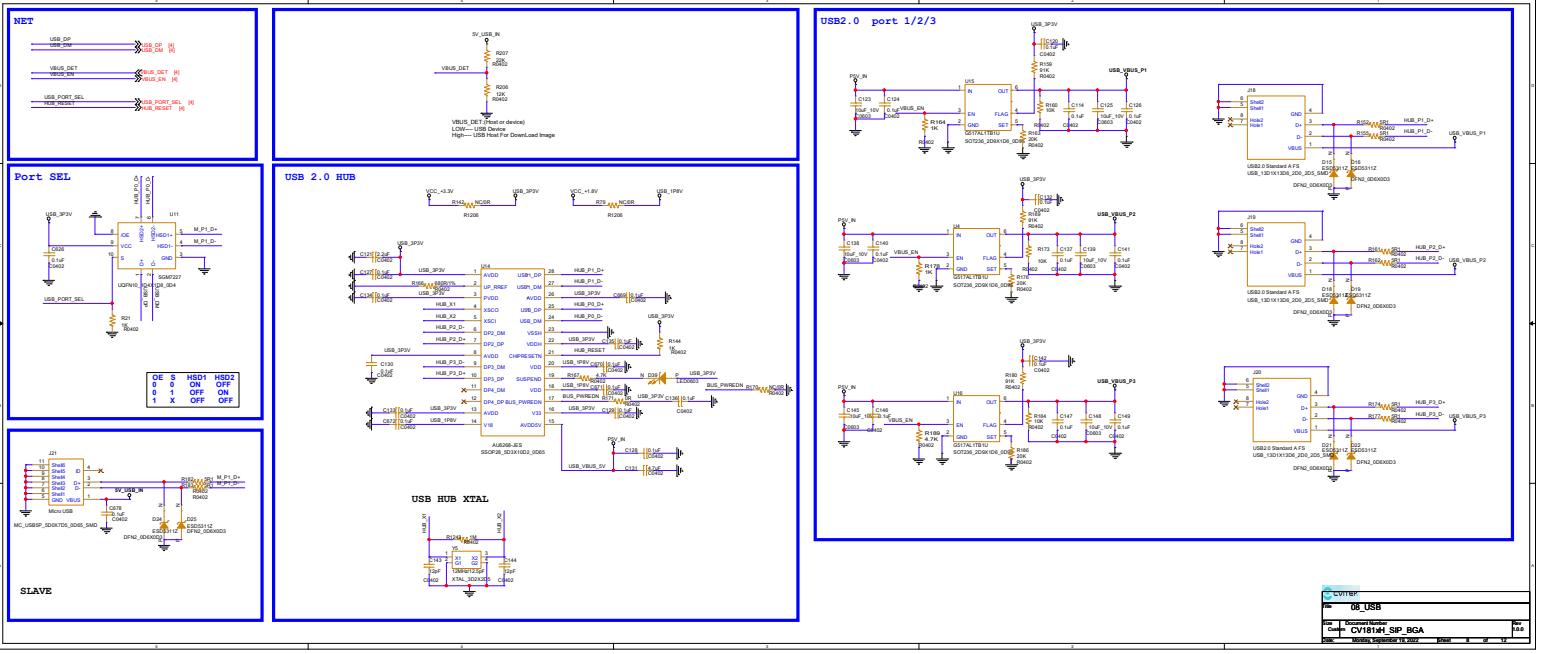
NET
USB_DP
USB_DM
VBUS_DET
VBUS_EN
USB_PORT_SEL
HUB_RESET
5V_USB_IN
R207
R202
R206
12K
R0402
VBUS_DET (Host or device)
LOW---- USB Device
High---- USB Host For DownLoad Image
Port SEL
U11
SGM7227
UQFN10_SD4
USB_PORT_SEL
R21
1K
R0402
OE S HSD1 HSD2
0 0 ON OFF
0 1 OFF ON
1 X OFF OFF
USB 2.0 HUB
U14
AU8268-IES
SSOP28_5D3X10D2_0D65
USB_3P3V
VCC_+3.3V
VCC_+1.8V
USB_1P8V
USB_VBUS_5V
USB HUB XTAL
Y5
XTAL_3D2X2D5
J21
Micro USB
MC_USB5P_5D0X7D5_0D65_SMD
SLAVE
USB2.0 port 1/2/3
U15
U16
U17
SOT236_2D9X1D6_0D95
USB_VBUS_P1
USB_VBUS_P2
USB_VBUS_P3
J18
J19
J20
USB2.0 Standard A FS
USB_13D1X13D6_2D0_2D5_SMD
DFN2_0D6X0D3
ESD5311Z
LVITEP
Title
08_USB
Size
Document Number
Rev
Custom
CV181xH_SIP_BGA
0.0
Date: Monday, September 19, 2022
Sheet 8 of 12

NET

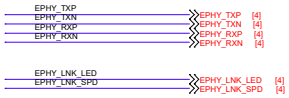

ETH

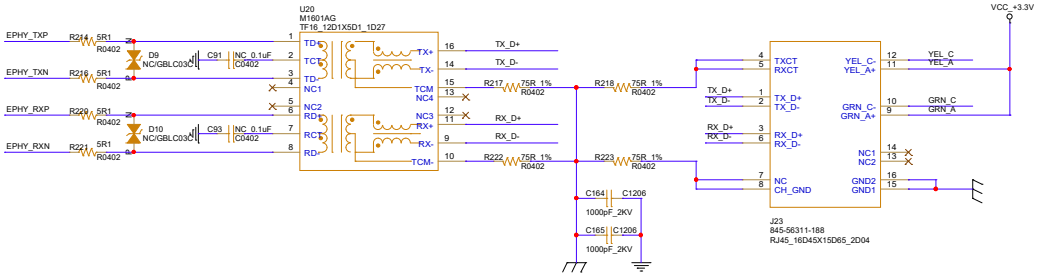

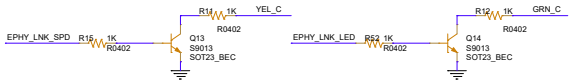

CVITEK

Title	09_RJ45		
Size: Custom	Document Number: CV181xH_SIP_BGA		Rev: 1.0.0
Date: Monday, September 19, 2022	Sheet 9 of 12		

NET

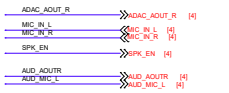

Audio AMP

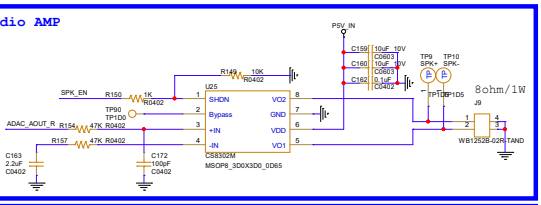

AEC

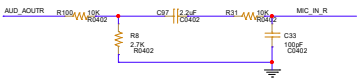

MIC

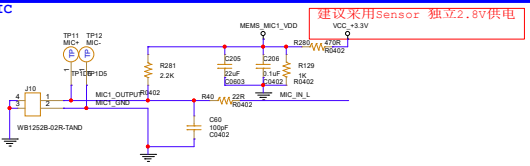

DMIC_LR

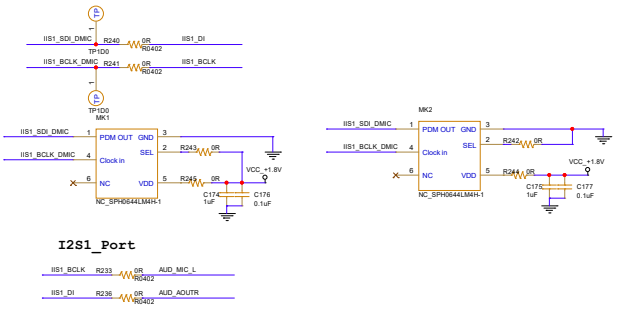

I2S1_Port

CVITEK

Title	10_AUDIO	
Size: Custom	Document Number: CV181xH_SIP_BGA	Rev: 1.0.0
Date: Wednesday, March 01, 2023	Sheet 10 of 12	

CViTeK Ltd.

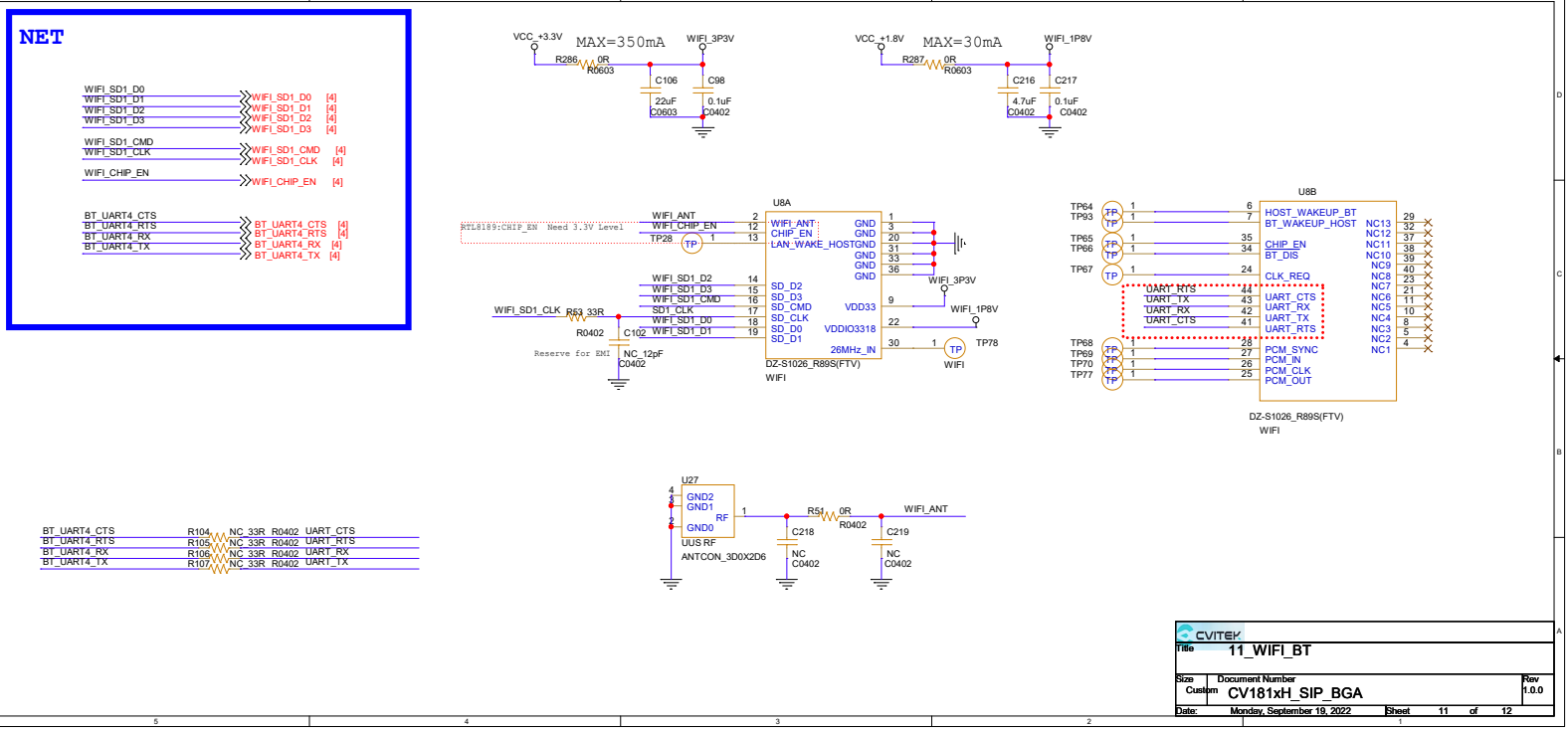

CVITEK

Title	11_WIFI_BT		
Size: Custom	Document Number: CV181xH_SIP_BGA		Rev: 1.0.0
Date: Monday, September 19, 2022	Sheet 11 of 12		

CViTeK Ltd.

NET

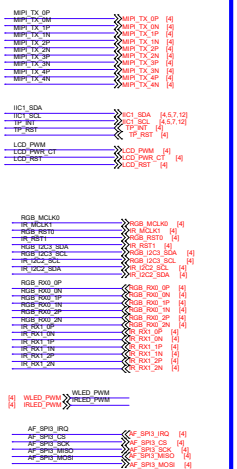

RGB SENEOR

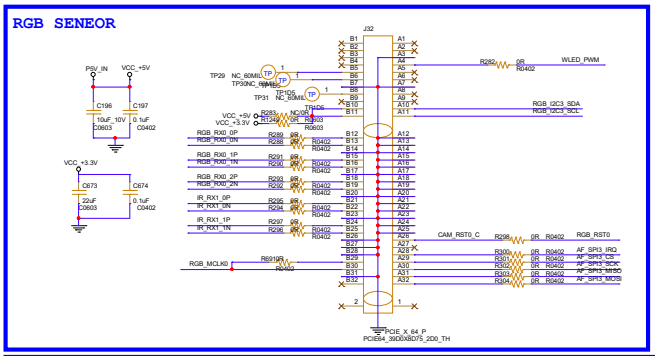

IR SENEOR

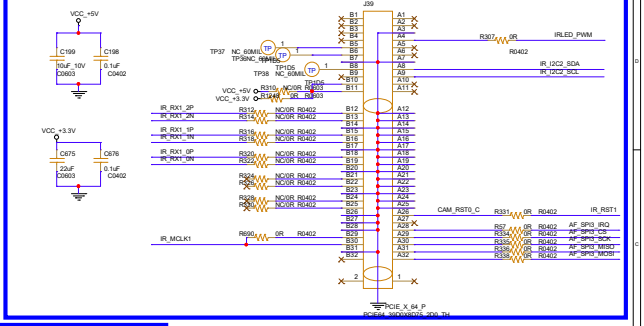

PANEL&TP

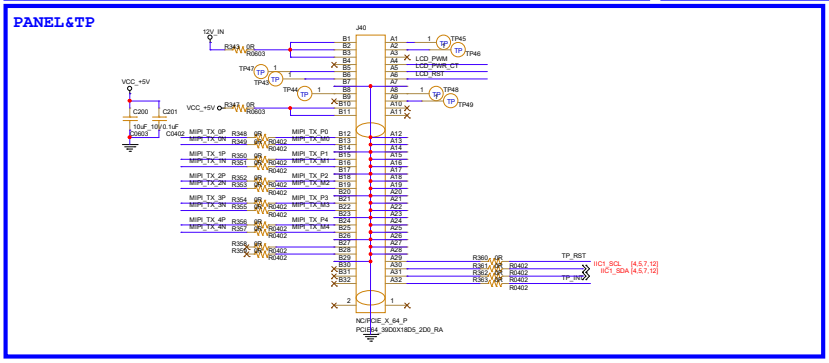

CVITEK			
Title	12_Sensor_Panel		
Size	Document Number		Rev
Custom	CV181xH_SIP_BGA		V1.0.0
Date:	Monday, September 19, 2022	Sheet 12 of 12	