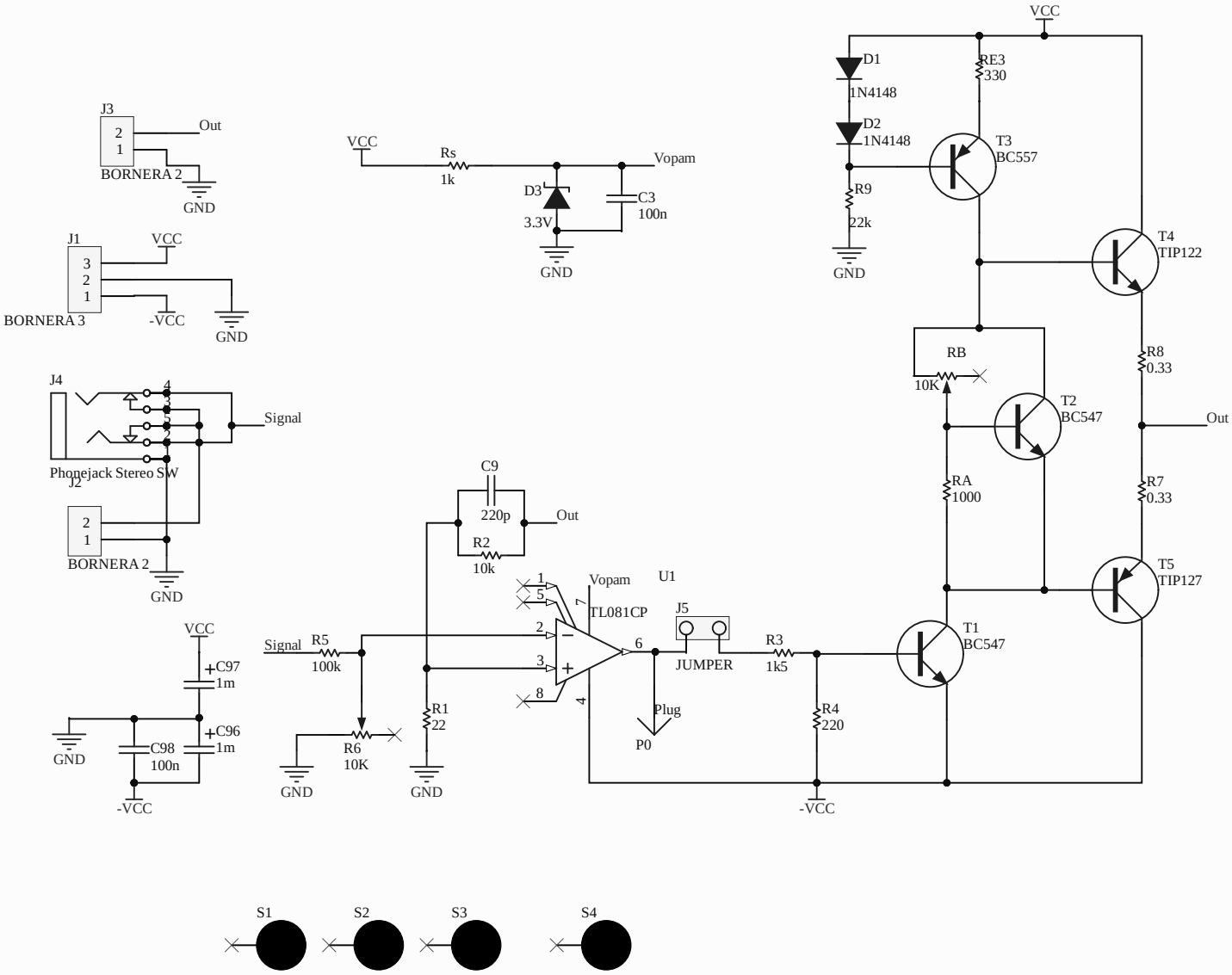
VCC
D1
1N4148
RE3
330
D2
1N4148
T3
BC557
R9
22k
GND
T4
TIP122
J3
Out
BORNERA 2
GND
VCC
Rs
1k
Vopam
D3
3.3V
C3
100n
GND
J1
VCC
BORNERA 3
-VCC
GND
RB
10K
R8
0.33
T2
BC547
Out
J4
Signal
Phonejack Stereo SW
J2
BORNERA 2
GND
RA
1000
R7
0.33
C9
220p
Out
R2
10k
Vopam
U1
TL081CP
J5
JUMPER
T5
TIP127
T1
BC547
VCC
Signal
R5
100k
R3
1k5
C97
1m
C96
1m
C98
100n
GND
-VCC
R6
10K
GND
R1
22
GND
Plug
P0
R4
220
-VCC
S1
S2
S3
S4