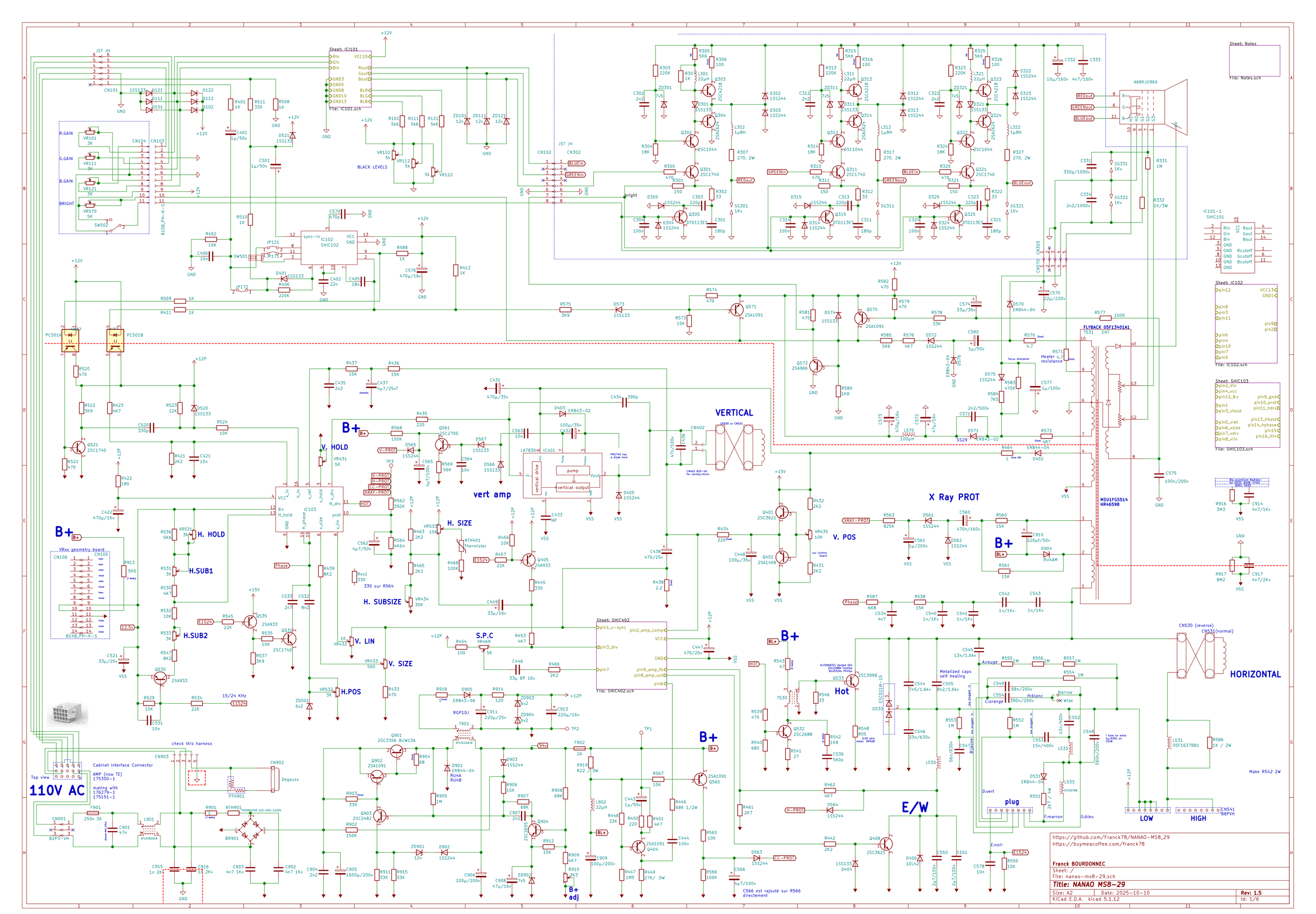

110V AC
B+
VERTICAL
vert amp
X Ray PROT
HORIZONTAL
E/W
Hot
plug
LOW
HIGH
FLYBACK 05F13401A1
MSU1FGS514
HR46598
A68KJU96X
Sheet: IC101
File: IC101.sch
Sheet: Notes
File: Notes.sch
Sheet: IC102
File: IC102.sch
Sheet: SHIC103
File: SHIC103.sch
Sheet: SHIC402
File: SHIC402.sch
Cabinet Interface Connector
AMP (now TE)
175300-1
mating with
176279-1
175151-1
check this harness
Degauss
Top view
VRxx geometry board
15/24 KHz
BLACK LEVELS
H. HOLD
H.SUB1
H.SUB2
H. SIZE
H. SUBSIZE
V. HOLD
V. LIN
V. SIZE
H.POS
S.P.C
V. POS
B+ adj
Make R542 2W
C566 est rajouté sur R566 directement
https://github.com/Franck78/NANAO-MS8_29
https://buymeacoffee.com/franck78
Franck BOURDONNEC
Sheet: /
File: nanao-ms8-29.sch
Title: NANAO MS8-29
Size: A2
Date: 2025-10-10
Rev: 1.5
KiCad E.D.A. kicad 5.1.12
Id: 1/6

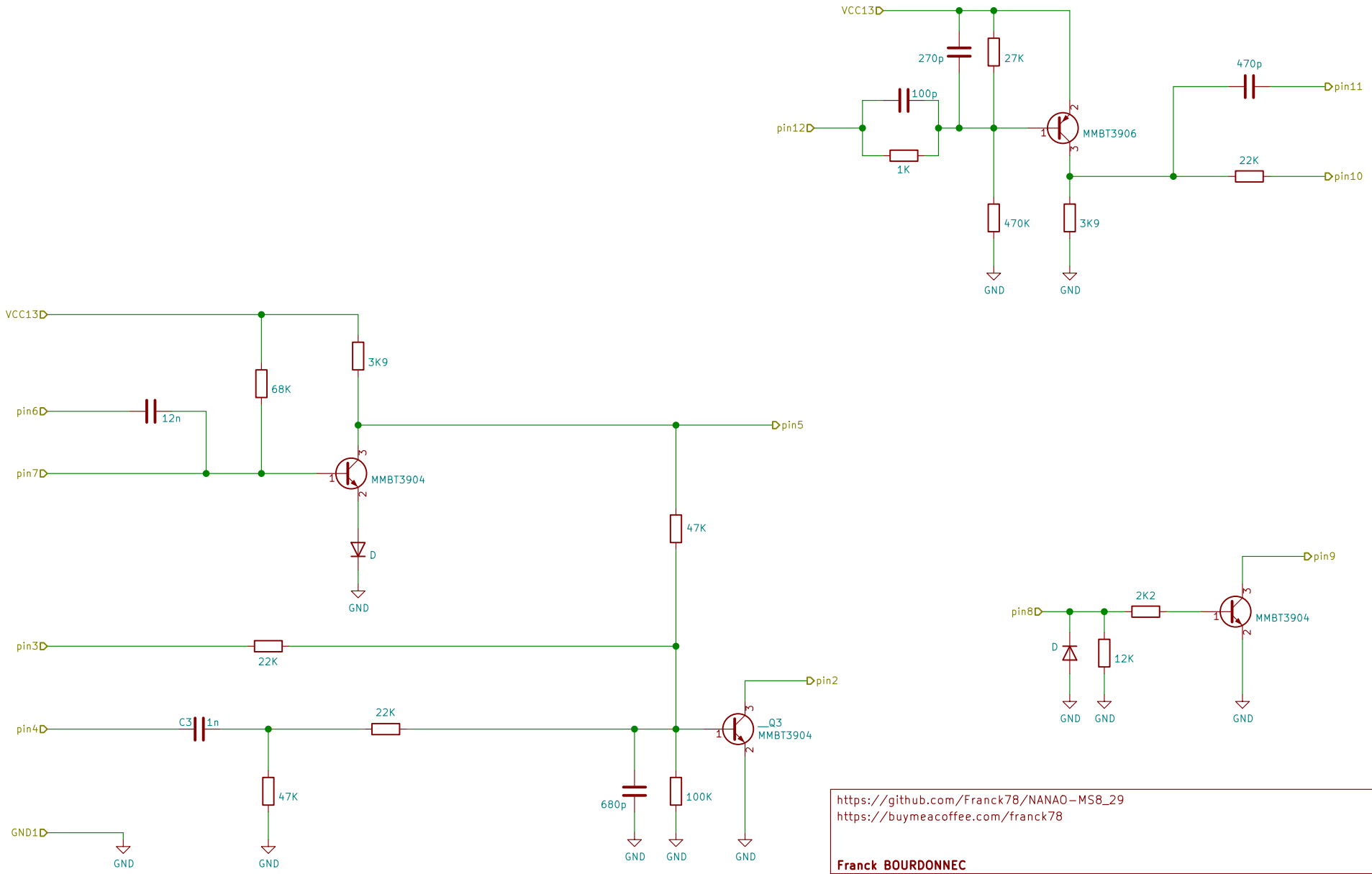

https://github.com/Franck78/NANAO-MS8_29
https://buymeacoffee.com/franck78

Franck BOURDONNEC

Sheet: /IC102/
File: IC102.sch

Title: NANAO MS8-29

Size: A4	Date: 2025-10-10	**Rev: 1.5**
KiCad E.D.A. kicad 5.1.12		Id: 2/6

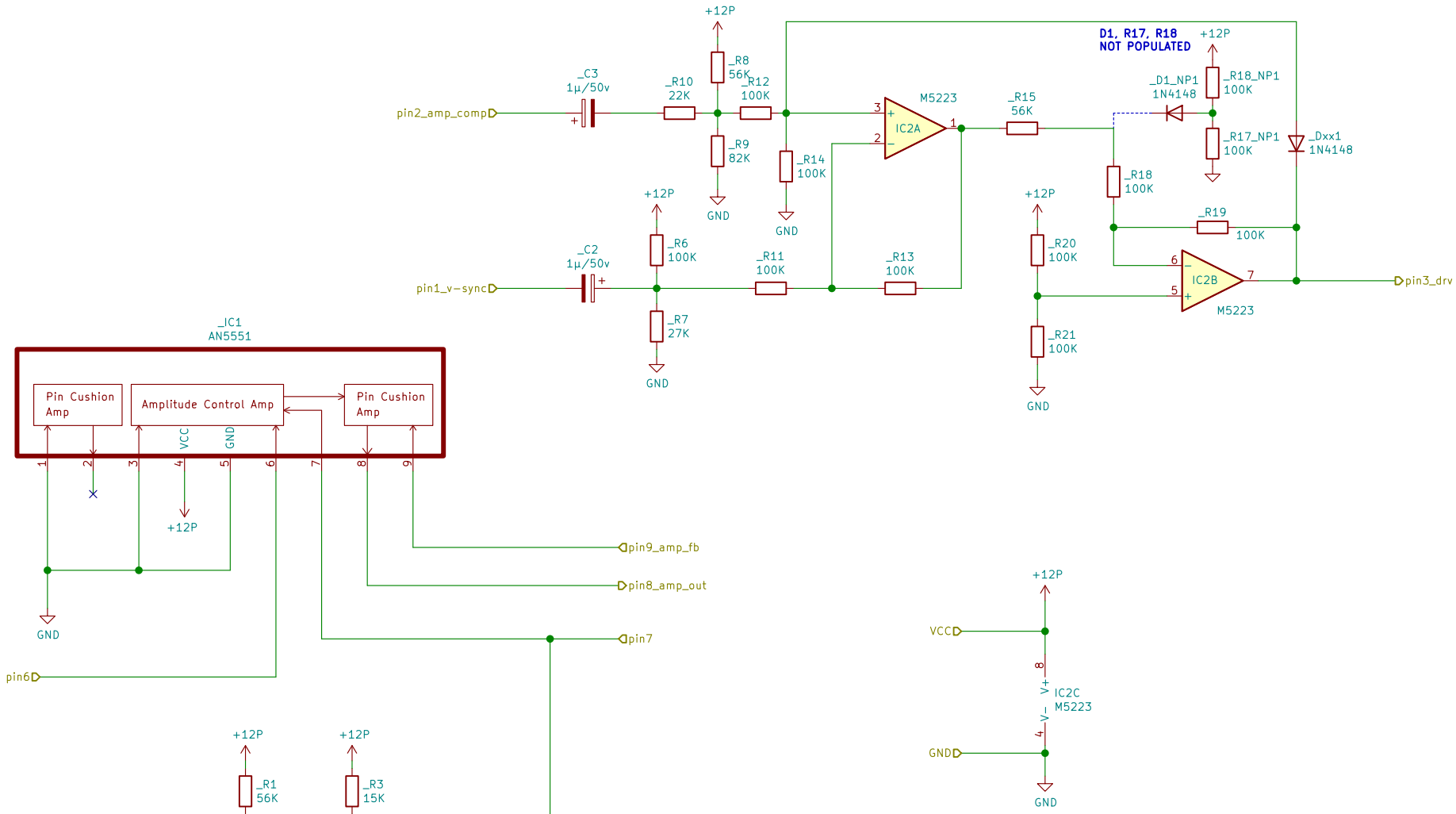

https://github.com/Franck78/NANAO-MS8_29
https://buymeacoffee.com/franck78

Franck BOURDONNEC

Sheet: /SHIC402/
File: SHIC402.sch

Title: NANAO MS8-29

Size: A4	Date: 2025-10-10	**Rev: 1.5**
KiCad E.D.A. kicad 5.1.12		Id: 3/6

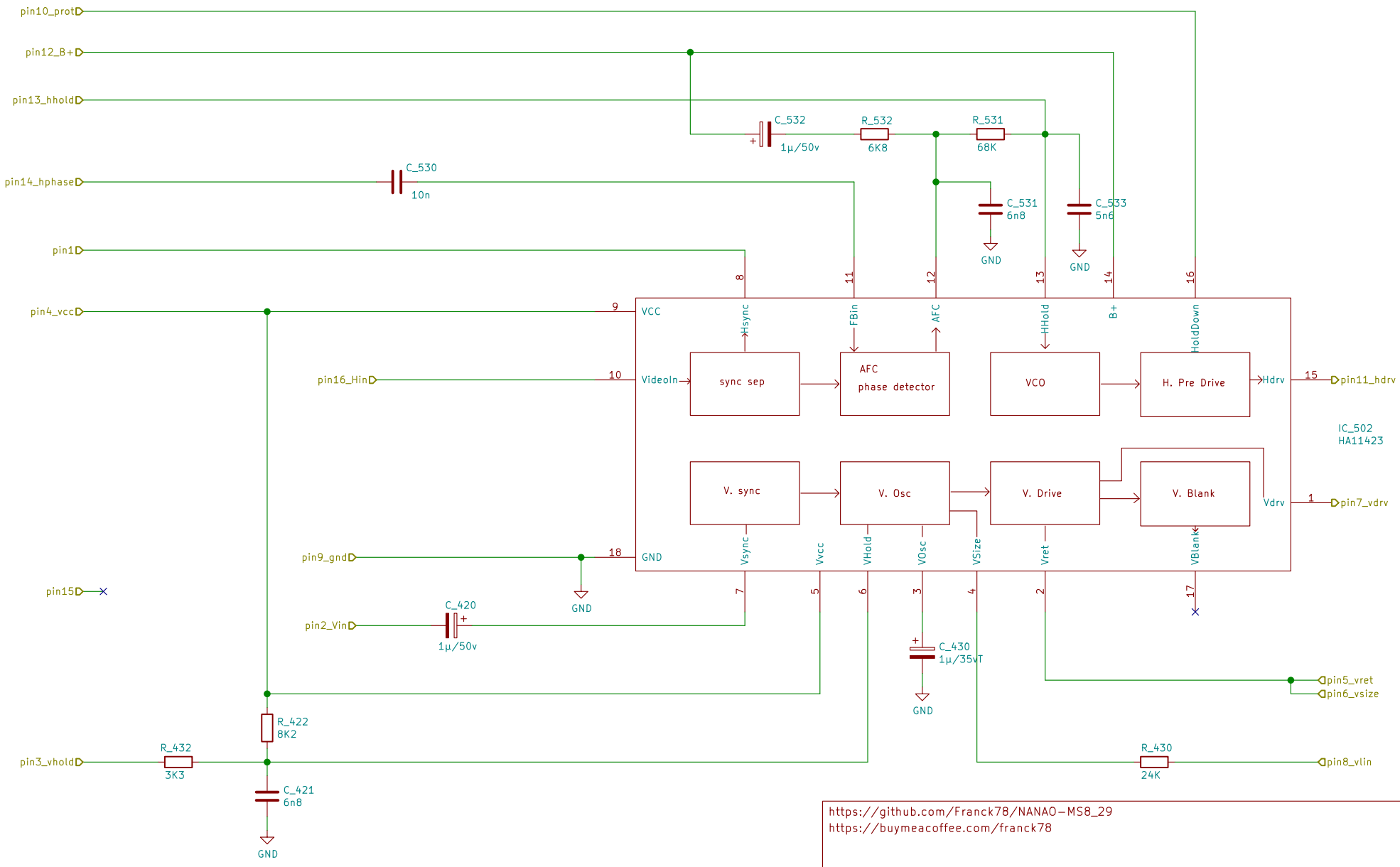

https://github.com/Franck78/NANAO-MS8_29
https://buymeacoffee.com/franck78

Franck BOURDONNEC

Sheet: /SHIC103/
File: SHIC103.sch

Title: NANAO MS8-29

Size: A4	Date: 2025-10-10	**Rev: 1.5**
KiCad E.D.A. kicad 5.1.12		Id: 4/6

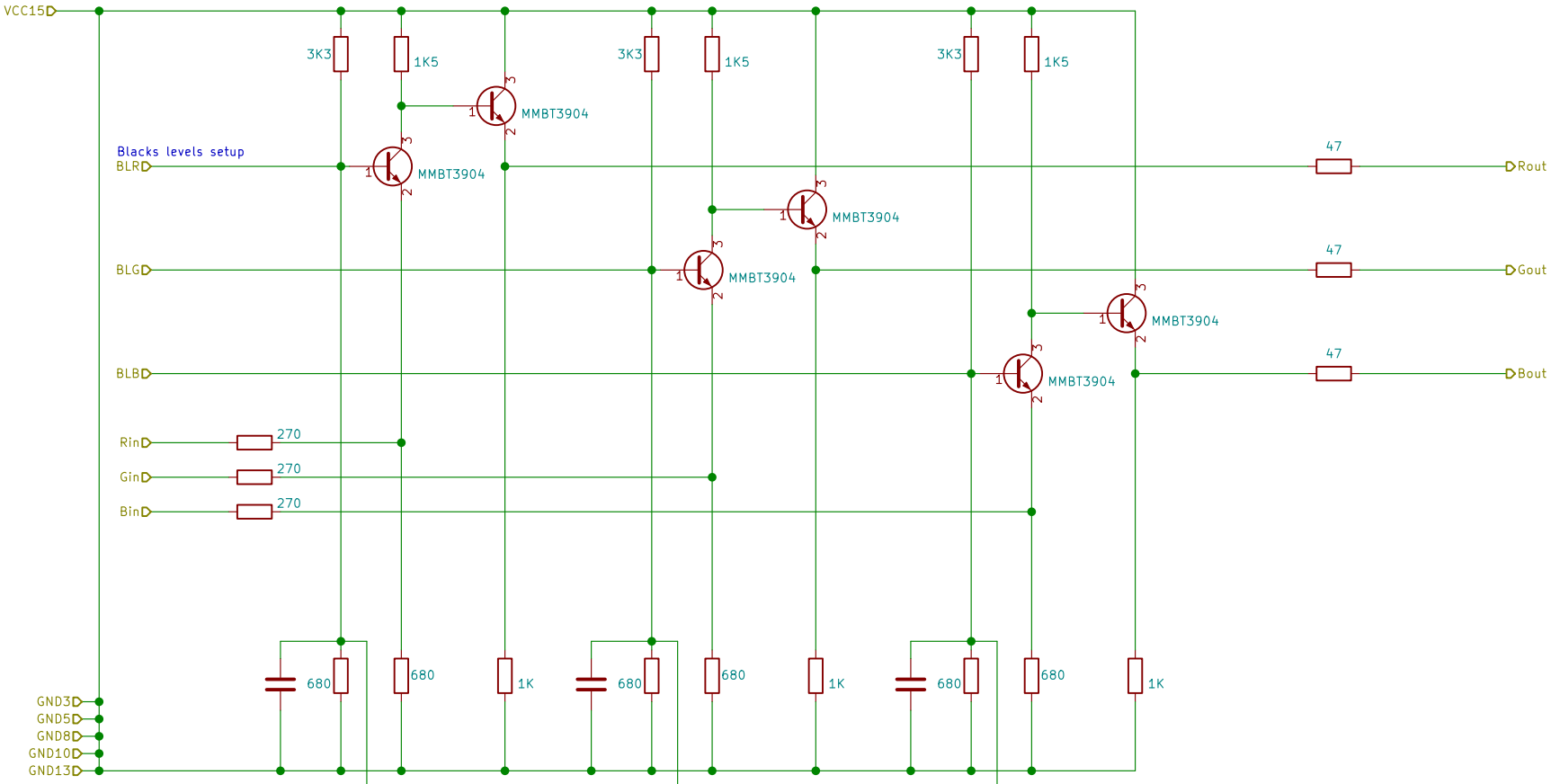

Sur le PCB principal

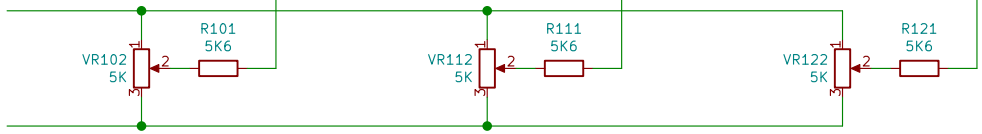

https://github.com/Franck78/NANAO-MS8_29
https://buymeacoffee.com/franck78

Franck BOURDONNEC

Sheet: /ICI101/
File: IC101.sch

Title: NANAO MS8-29

Size: A4	Date: 2025-10-10	**Rev: 1.5**
KiCad E.D.A. kicad 5.1.12		Id: 5/6

V1.5
update some values
R303,R313,R323 from 62K to 220K
R302,R312,R322 from 68 to 33
R307,R317,R327 from 1/2W to 2W

L570 : from 22µH to 100µH

L301,L311,L321 : from 10µH to 22µH

L302,L312,L322 : from 1µH to 1.8µH
(not really really sure of ring colors
 brown,grey,gold
 red, violet, gold)

found 1K resistor on L301, named it R307

Sparkgap: 1Kv

Add D305, D315, D325 pcb-crt bodge

C446 bipolar 33µ/16v

https://github.com/Franck78/NANAO-MS8_29
https://buymeacoffee.com/franck78

Sheet: /Notes/
File: Notes.sch

Title:

Size: A4	Date: 2025-10-10	**Rev: 1.5**
KiCad E.D.A. kicad 5.1.12		Id: 6/6