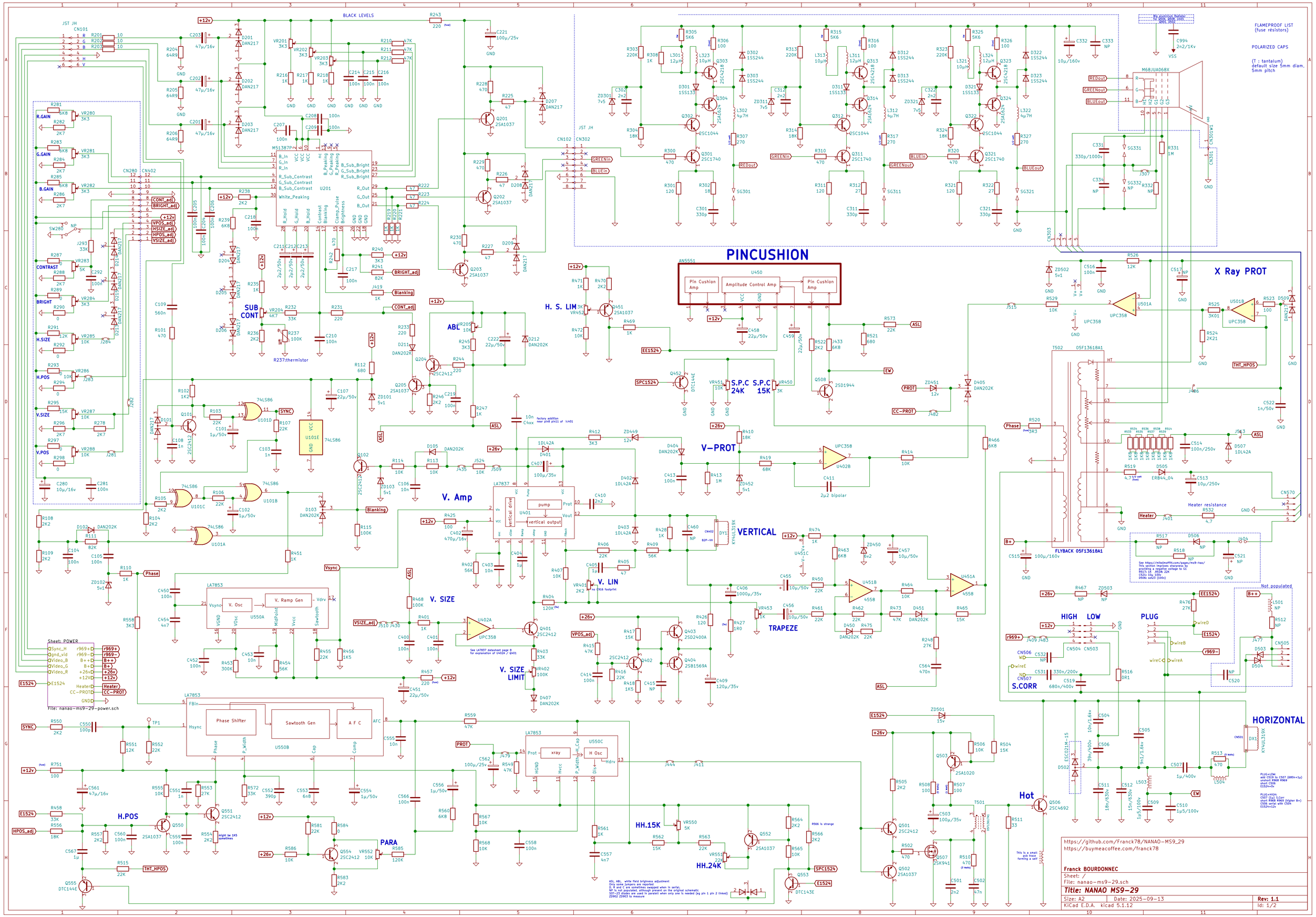
PINCUSHION
X Ray PROT
V. Amp
VERTICAL
V-PROT
TRAPEZE
V. SIZE
V. LIN
V. SIZE LIMIT
SUB CONT
ABL
H. S. LIM
S.PC 24K
S.PC 15K
H.POS
PARA
HH.15K
HH.24K
S.CORR
HIGH
LOW
PLUG
HORIZONTAL
Hot
BLACK LEVELS
FLAMEPROOF LIST (fuse résistors)
POLARIZED CAPS
(T : tantalum) default size 5mm diam, 5mm pitch
FLYBACK 05F13618A1
M51387P
U201
LA7853
U550A
U550B
U550C
LA7837
U401
U402A
U402B
U451A
U451B
U501A
U501B
U450
M68JUA068X
Sheet: POWER
File: nanao-ms9-29-power.sch
https://github.com/Franck78/NANAO-MS9_29
https://buymeacoffee.com/franck78
Franck BOURDONNEC
Sheet: /
File: nanao-ms9-29.sch
Title: NANAO MS9-29
Size: A2
Date: 2025-09-13
KiCad E.D.A. kicad 5.1.12
Rev: 1.1
Id: 1/2

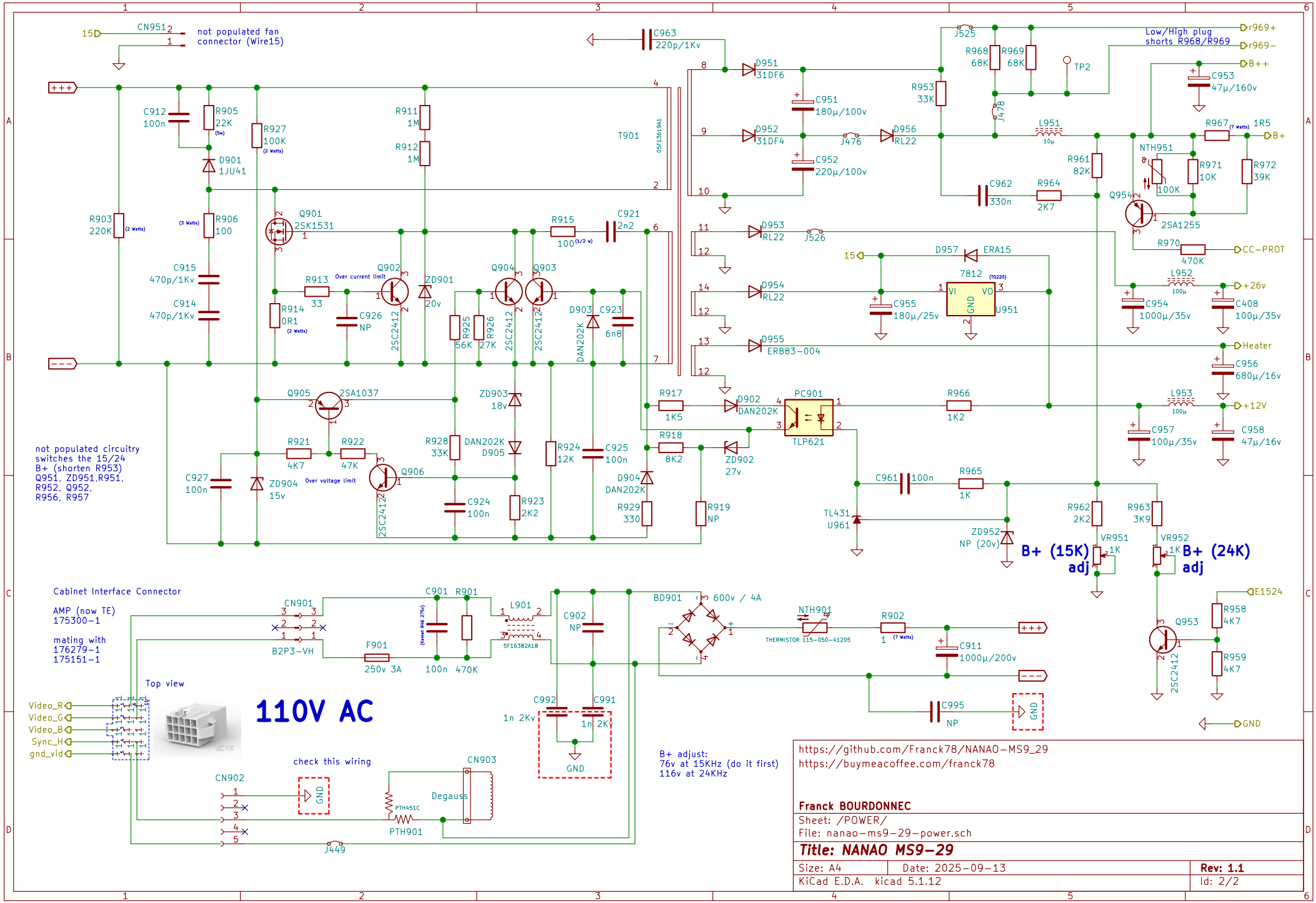

https://github.com/Franck78/NANAO−MS9_29
https://buymeacoffee.com/franck78

Franck BOURDONNEC

Sheet: /POWER/
File: nanao−ms9−29−power.sch

Title: NANAO MS9−29

Size: A4	Date: 2025−09−13	**Rev: 1.1**
KiCad E.D.A. kicad 5.1.12		Id: 2/2