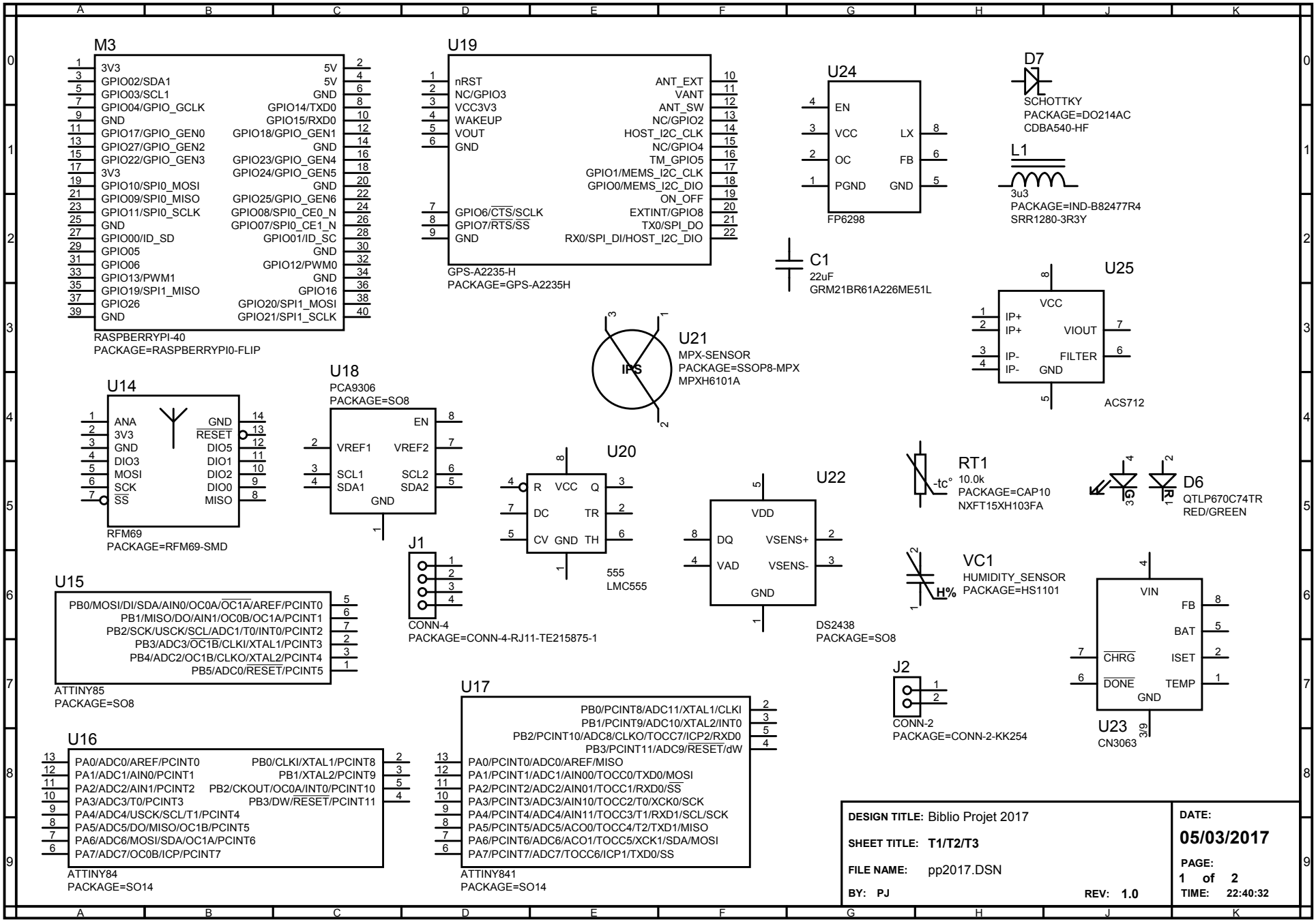
M3
1 3V3
3 GPIO02/SDA1
5 GPIO03/SCL1
7 GPIO04/GPIO_GCLK
9 GND
11 GPIO17/GPIO_GEN0
13 GPIO27/GPIO_GEN2
15 GPIO22/GPIO_GEN3
17 3V3
19 GPIO10/SPI0_MOSI
21 GPIO09/SPI0_MISO
23 GPIO11/SPI0_SCLK
25 GND
27 GPIO00/ID_SD
29 GPIO05
31 GPIO06
33 GPIO13/PWM1
35 GPIO19/SPI1_MISO
37 GPIO26
39 GND
2 5V
4 5V
6 GND
8 GPIO14/TXD0
10 GPIO15/RXD0
12 GPIO18/GPIO_GEN1
14 GND
16 GPIO23/GPIO_GEN4
18 GPIO24/GPIO_GEN5
20 GND
22 GPIO25/GPIO_GEN6
24 GPIO08/SPI0_CE0_N
26 GPIO07/SPI0_CE1_N
28 GPIO01/ID_SC
30 GND
32 GPIO12/PWM0
34 GND
36 GPIO16
38 GPIO20/SPI1_MOSI
40 GPIO21/SPI1_SCLK
RASPBERRYPI-40
PACKAGE=RASPBERRYPI0-FLIP
U19
1 nRST
2 NC/GPIO3
3 VCC3V3
4 WAKEUP
5 VOUT
6 GND
7 GPIO6/CTS/SCLK
8 GPIO7/RTS/SS
9 GND
10 ANT_EXT
11 VANT
12 ANT_SW
13 NC/GPIO2
14 HOST_I2C_CLK
15 NC/GPIO4
16 TM_GPIO5
17 GPIO1/MEMS_I2C_CLK
18 GPIO0/MEMS_I2C_DIO
19 ON_OFF
20 EXTINT/GPIO8
21 TX0/SPI_DO
22 RX0/SPI_DI/HOST_I2C_DIO
GPS-A2235-H
PACKAGE=GPS-A2235H
U24
4 EN
3 VCC
2 OC
1 PGND
8 LX
6 FB
5 GND
FP6298
D7
SCHOTTKY
PACKAGE=DO214AC
CDBA540-HF
L1
3u3
PACKAGE=IND-B82477R4
SRR1280-3R3Y
C1
22uF
GRM21BR61A226ME51L
U25
8 VCC
1 IP+
2 IP+
3 IP-
4 IP-
7 VIOUT
6 FILTER
5 GND
ACS712
U21
MPX-SENSOR
PACKAGE=SSOP8-MPX
MPXH6101A
U14
1 ANA
2 3V3
3 GND
4 DIO3
5 MOSI
6 SCK
7 SS
14 GND
13 RESET
12 DIO5
11 DIO1
10 DIO2
9 DIO0
8 MISO
RFM69
PACKAGE=RFM69-SMD
U18
PCA9306
PACKAGE=SO8
2 VREF1
3 SCL1
4 SDA1
8 EN
7 VREF2
6 SCL2
5 SDA2
GND
U20
4 R
7 DC
5 CV
8 VCC
GND
3 Q
2 TR
6 TH
555
LMC555
U22
5 VDD
8 DQ
4 VAD
2 VSENS+
3 VSENS-
GND
DS2438
PACKAGE=SO8
RT1
10.0k
PACKAGE=CAP10
NXFT15XH103FA
D6
QTLP670C74TR
RED/GREEN
J1
CONN-4
PACKAGE=CONN-4-RJ11-TE215875-1
VC1
HUMIDITY_SENSOR
PACKAGE=HS1101
U15
PB0/MOSI/DI/SDA/AIN0/OC0A/OC1A/AREF/PCINT0
PB1/MISO/DO/AIN1/OC0B/OC1A/PCINT1
PB2/SCK/USCK/SCL/ADC1/T0/INT0/PCINT2
PB3/ADC3/OC1B/CLKI/XTAL1/PCINT3
PB4/ADC2/OC1B/CLKO/XTAL2/PCINT4
PB5/ADC0/RESET/PCINT5
ATTINY85
PACKAGE=SO8
U23
CN3063
J2
CONN-2
PACKAGE=CONN-2-KK254
U16
PA0/ADC0/AREF/PCINT0
PA1/ADC1/AIN0/PCINT1
PA2/ADC2/AIN1/PCINT2
PA3/ADC3/T0/PCINT3
PA4/ADC4/USCK/SCL/T1/PCINT4
PA5/ADC5/DO/MISO/OC1B/PCINT5
PA6/ADC6/MOSI/SDA/OC1A/PCINT6
PA7/ADC7/OC0B/ICP/PCINT7
PB0/CLKI/XTAL1/PCINT8
PB1/XTAL2/PCINT9
PB2/CKOUT/OC0A/INT0/PCINT10
PB3/DW/RESET/PCINT11
ATTINY84
PACKAGE=SO14
U17
PB0/PCINT8/ADC11/XTAL1/CLKI
PB1/PCINT9/ADC10/XTAL2/INT0
PB2/PCINT10/ADC8/CLKO/TOCC7/ICP2/RXD0
PB3/PCINT11/ADC9/RESET/dW
PA0/PCINT0/ADC0/AREF/MISO
PA1/PCINT1/ADC1/AIN00/TOCC0/TXD0/MOSI
PA2/PCINT2/ADC2/AIN01/TOCC1/RXD0/SS
PA3/PCINT3/ADC3/AIN10/TOCC2/T0/XCK0/SCK
PA4/PCINT4/ADC4/AIN11/TOCC3/T1/RXD1/SCL/SCK
PA5/PCINT5/ADC5/ACO0/TOCC4/T2/TXD1/MISO
PA6/PCINT6/ADC6/ACO1/TOCC5/XCK1/SDA/MOSI
PA7/PCINT7/ADC7/TOCC6/ICP1/TXD0/SS
ATTINY841
PACKAGE=SO14
DESIGN TITLE: Biblio Projet 2017
SHEET TITLE: T1/T2/T3
FILE NAME: pp2017.DSN
BY: PJ
REV: 1.0
DATE:
05/03/2017
PAGE:
1 of 2
TIME: 22:40:32

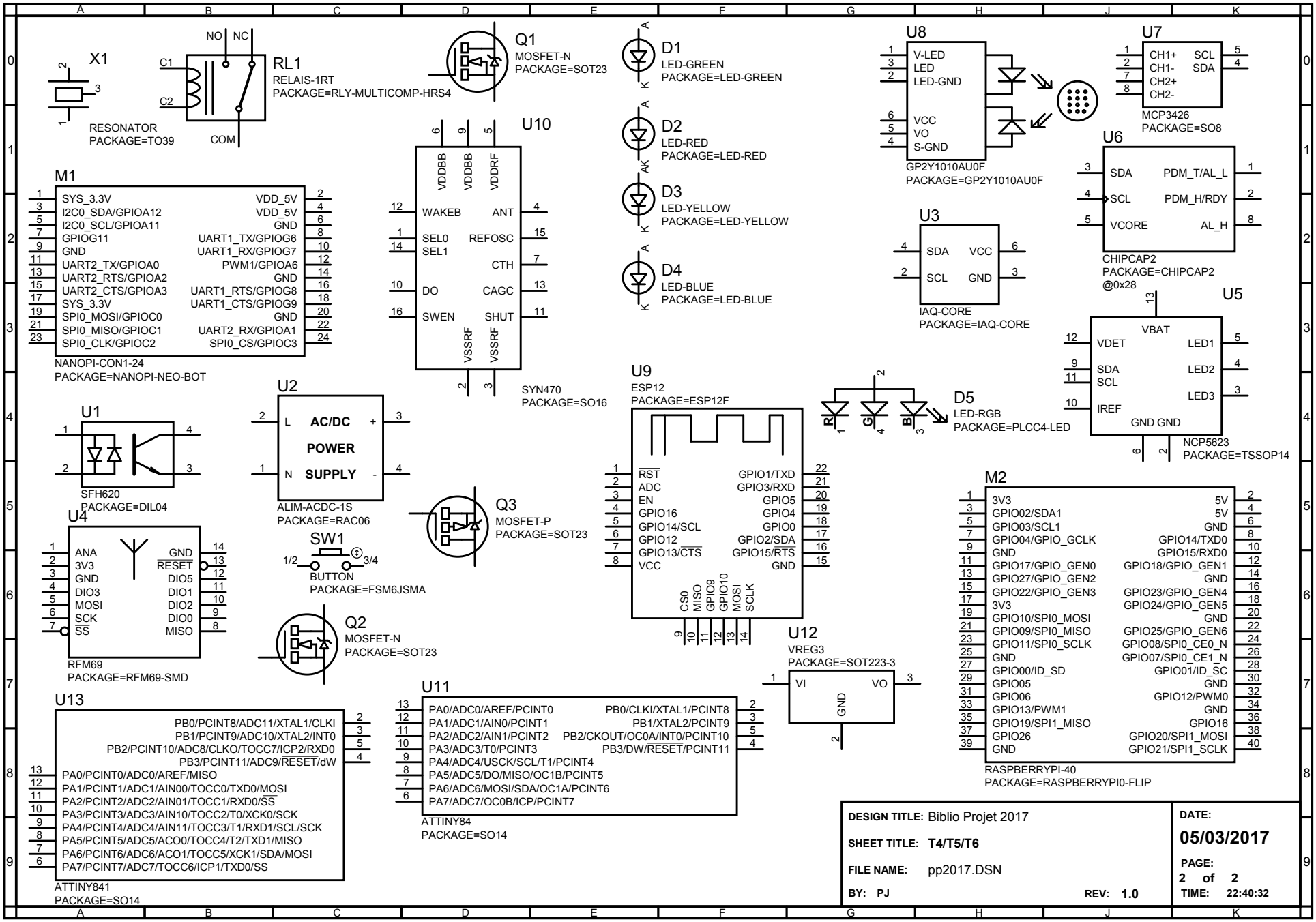
X1
RESONATOR
PACKAGE=TO39
RL1
RELAIS-1RT
PACKAGE=RLY-MULTICOMP-HRS4
NO NC
C1
C2
COM
Q1
MOSFET-N
PACKAGE=SOT23
D1
LED-GREEN
PACKAGE=LED-GREEN
D2
LED-RED
PACKAGE=LED-RED
D3
LED-YELLOW
PACKAGE=LED-YELLOW
D4
LED-BLUE
PACKAGE=LED-BLUE
U8
V-LED
LED
LED-GND
VCC
VO
S-GND
GP2Y1010AU0F
PACKAGE=GP2Y1010AU0F
U7
CH1+
CH1-
CH2+
CH2-
SCL
SDA
MCP3426
PACKAGE=SO8
U6
SDA
SCL
VCORE
PDM_T/AL_L
PDM_H/RDY
AL_H
CHIPCAP2
PACKAGE=CHIPCAP2
@0x28
U3
SDA
SCL
VCC
GND
IAQ-CORE
PACKAGE=IAQ-CORE
U10
VDDBB
VDDBB
VDDRF
WAKEB
SEL0
SEL1
DO
SWEN
ANT
REFOSC
CTH
CAGC
SHUT
VSSRF
VSSRF
SYN470
PACKAGE=SO16
M1
SYS_3.3V
I2C0_SDA/GPIOA12
I2C0_SCL/GPIOA11
GPIOG11
GND
UART2_TX/GPIOA0
UART2_RTS/GPIOA2
UART2_CTS/GPIOA3
SYS_3.3V
SPI0_MOSI/GPIOC0
SPI0_MISO/GPIOC1
SPI0_CLK/GPIOC2
VDD_5V
VDD_5V
GND
UART1_TX/GPIOG6
UART1_RX/GPIOG7
PWM1/GPIOA6
GND
UART1_RTS/GPIOG8
UART1_CTS/GPIOG9
GND
UART2_RX/GPIOA1
SPI0_CS/GPIOC3
NANOPI-CON1-24
PACKAGE=NANOPI-NEO-BOT
U1
SFH620
PACKAGE=DIL04
U2
AC/DC
POWER
SUPPLY
L
N
+
-
ALIM-ACDC-1S
PACKAGE=RAC06
U9
ESP12
PACKAGE=ESP12F
RST
ADC
EN
GPIO16
GPIO14/SCL
GPIO12
GPIO13/CTS
VCC
GPIO1/TXD
GPIO3/RXD
GPIO5
GPIO4
GPIO0
GPIO2/SDA
GPIO15/RTS
GND
CS0
MISO
GPIO9
GPIO10
MOSI
SCLK
D5
LED-RGB
PACKAGE=PLCC4-LED
U5
VBAT
VDET
SDA
SCL
IREF
LED1
LED2
LED3
GND GND
NCP5623
PACKAGE=TSSOP14
Q3
MOSFET-P
PACKAGE=SOT23
U4
ANA
3V3
GND
DIO3
MOSI
SCK
SS
GND
RESET
DIO5
DIO1
DIO2
DIO0
MISO
RFM69
PACKAGE=RFM69-SMD
SW1
1/2
3/4
BUTTON
PACKAGE=FSM6JSMA
Q2
MOSFET-N
PACKAGE=SOT23
M2
3V3
GPIO02/SDA1
GPIO03/SCL1
GPIO04/GPIO_GCLK
GND
GPIO17/GPIO_GEN0
GPIO27/GPIO_GEN2
GPIO22/GPIO_GEN3
3V3
GPIO10/SPI0_MOSI
GPIO09/SPI0_MISO
GPIO11/SPI0_SCLK
GND
GPIO00/ID_SD
GPIO05
GPIO06
GPIO13/PWM1
GPIO19/SPI1_MISO
GPIO26
GND
5V
5V
GND
GPIO14/TXD0
GPIO15/RXD0
GPIO18/GPIO_GEN1
GND
GPIO23/GPIO_GEN4
GPIO24/GPIO_GEN5
GND
GPIO25/GPIO_GEN6
GPIO08/SPI0_CE0_N
GPIO07/SPI0_CE1_N
GPIO01/ID_SC
GND
GPIO12/PWM0
GND
GPIO16
GPIO20/SPI1_MOSI
GPIO21/SPI1_SCLK
RASPBERRYPI-40
PACKAGE=RASPBERRYPI0-FLIP
U12
VREG3
PACKAGE=SOT223-3
VI
VO
GND
U13
PB0/PCINT8/ADC11/XTAL1/CLKI
PB1/PCINT9/ADC10/XTAL2/INT0
PB2/PCINT10/ADC8/CLKO/TOCC7/ICP2/RXD0
PB3/PCINT11/ADC9/RESET/dW
PA0/PCINT0/ADC0/AREF/MISO
PA1/PCINT1/ADC1/AIN00/TOCC0/TXD0/MOSI
PA2/PCINT2/ADC2/AIN01/TOCC1/RXD0/SS
PA3/PCINT3/ADC3/AIN10/TOCC2/T0/XCK0/SCK
PA4/PCINT4/ADC4/AIN11/TOCC3/T1/RXD1/SCL/SCK
PA5/PCINT5/ADC5/ACO0/TOCC4/T2/TXD1/MISO
PA6/PCINT6/ADC6/ACO1/TOCC5/XCK1/SDA/MOSI
PA7/PCINT7/ADC7/TOCC6/ICP1/TXD0/SS
ATTINY841
PACKAGE=SO14
U11
PA0/ADC0/AREF/PCINT0
PA1/ADC1/AIN0/PCINT1
PA2/ADC2/AIN1/PCINT2
PA3/ADC3/T0/PCINT3
PA4/ADC4/USCK/SCL/T1/PCINT4
PA5/ADC5/DO/MISO/OC1B/PCINT5
PA6/ADC6/MOSI/SDA/OC1A/PCINT6
PA7/ADC7/OC0B/ICP/PCINT7
PB0/CLKI/XTAL1/PCINT8
PB1/XTAL2/PCINT9
PB2/CKOUT/OC0A/INT0/PCINT10
PB3/DW/RESET/PCINT11
ATTINY84
PACKAGE=SO14
DESIGN TITLE: Biblio Projet 2017
SHEET TITLE: T4/T5/T6
FILE NAME: pp2017.DSN
BY: PJ
REV: 1.0
DATE:
05/03/2017
PAGE:
2 of 2
TIME: 22:40:32