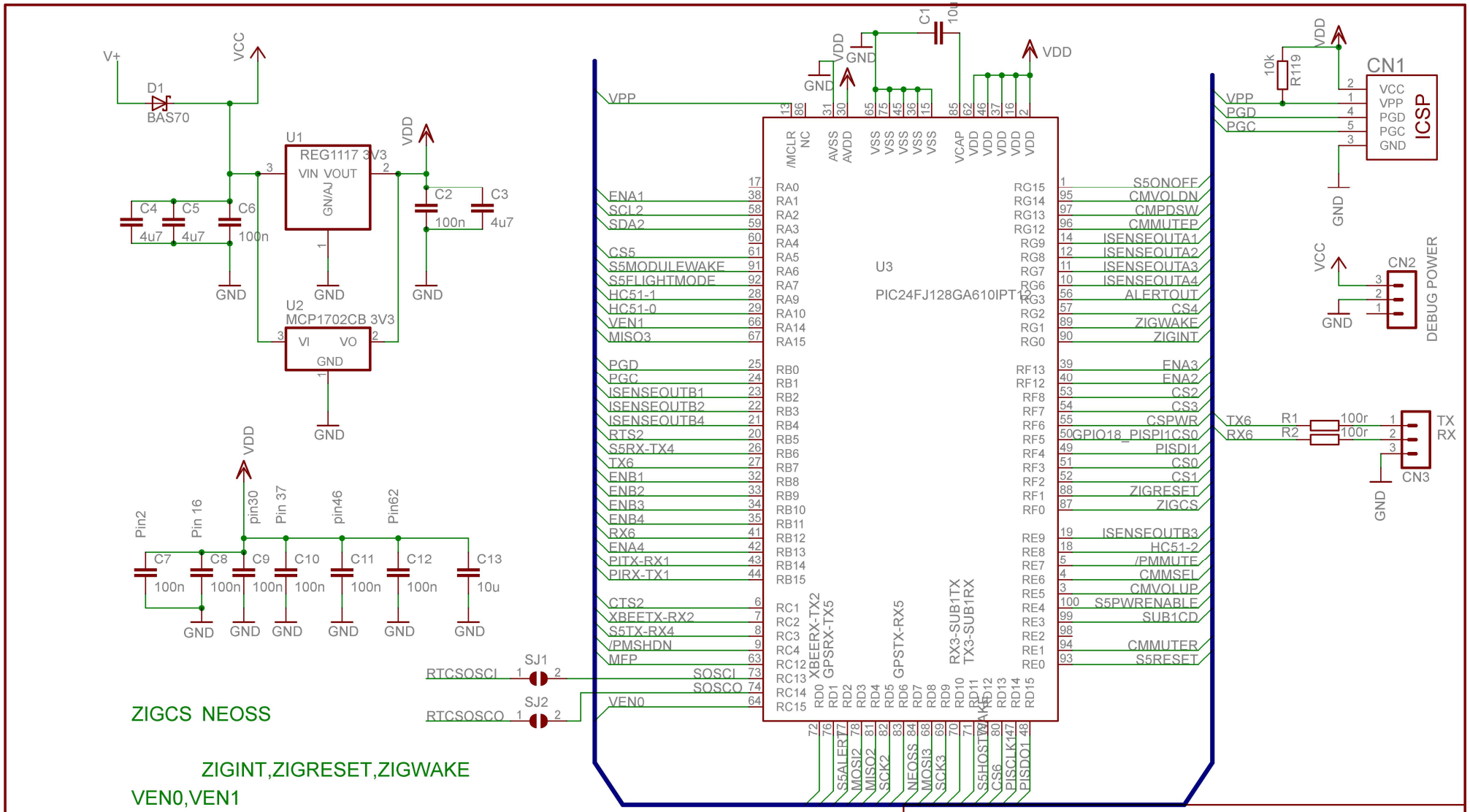
V+
D1
BAS70
VCC
U1
REG1117 3V3
VIN VOUT
GN/AJ
C4 C5 C6
4u7 4u7 100n
GND
VDD
C2 C3
100n 4u7
U2
MCP1702CB 3V3
VI VO
GND
Pin2 Pin 16 pin30 Pin 37 pin46 Pin62
C7 C8 C9 C10 C11 C12 C13
100n 100n 100n 100n 100n 100n 10u
SJ1
SJ2
RTCSOSCI
RTCSOSCO
C1 10u
U3
PIC24FJ128GA610IPT12
VPP
ENA1
SCL2
SDA2
CS5
S5MODULEWAKE
S5FLIGHTMODE
HC51-1
HC51-0
VEN1
MISO3
PGD
PGC
ISENSEOUTB1
ISENSEOUTB2
ISENSEOUTB4
RTS2
S5RX-TX4
TX6
ENB1
ENB2
ENB3
ENB4
RX6
ENA4
PITX-RX1
PIRX-TX1
CTS2
XBEETX-RX2
S5TX-RX4
/PMSHDN
MFP
SOSCI
SOSCO
VEN0
S5ONOFF
CMVOLDN
CMPDSW
CMMUTEP
ISENSEOUTA1
ISENSEOUTA2
ISENSEOUTA3
ISENSEOUTA4
ALERTOUT
CS4
ZIGWAKE
ZIGINT
ENA3
ENA2
CS2
CS3
CSPWR
GPIO18_PISPI1CS0
PISDI1
CS0
CS1
ZIGRESET
ZIGCS
ISENSEOUTB3
HC51-2
/PMMUTE
CMMSEL
CMVOLUP
S5PWRENABLE
SUB1CD
CMMUTER
S5RESET
S5ALERT
MOSI2
MISO2
SCK2
NEOSS
MOSI3
SCK3
S5HOSTWAKE
CS6
PISCLK1
PISDO1
XBEERX-TX2
GPSRX-TX5
GPSTX-RX5
RX3-SUB1TX
TX3-SUB1RX
CN1
ICSP
VCC
VPP
PGD
PGC
GND
10k R119
CN2
DEBUG POWER
CN3
TX
RX
TX6
RX6
R1 R2
100r 100r
ZIGCS NEOSS
ZIGINT,ZIGRESET,ZIGWAKE
VEN0,VEN1
PMMUTE,PMSHDN,HC52A,HC52B
CMMUTER,CMVOLDN,CNVOLUP,CMMSEL,CMPDSW,CMMUTEP,CMMODE
DISPENABLE
SIM5230FLIGHTMODE,HOSTWAKE,MODULEWAKE,SIM5230ALERT,SIM3250RESET,SIM3250ONOFF
TITLE: pi expansion 24.4
Document Number:
REV:
Date: 19/11/2020 10:35:33p
Sheet: 1/20

POWER in and board SPI interface

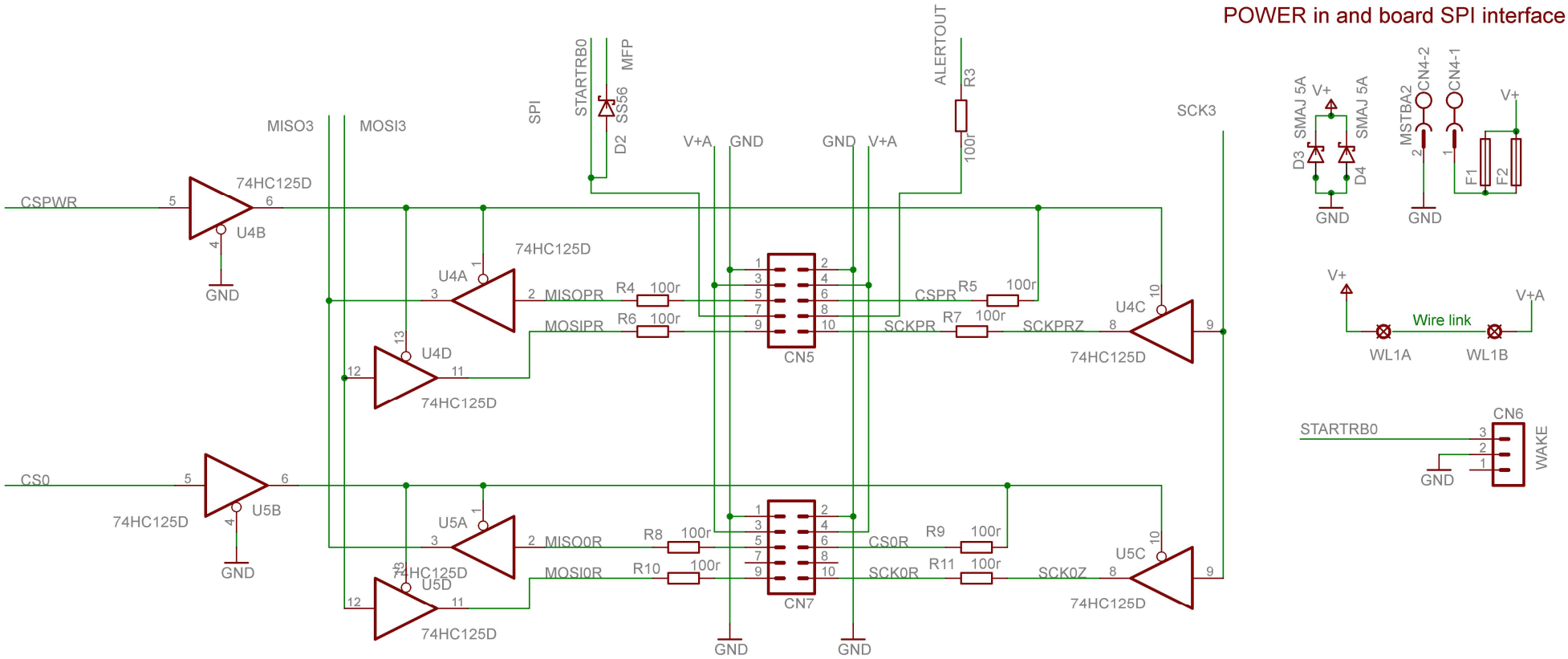

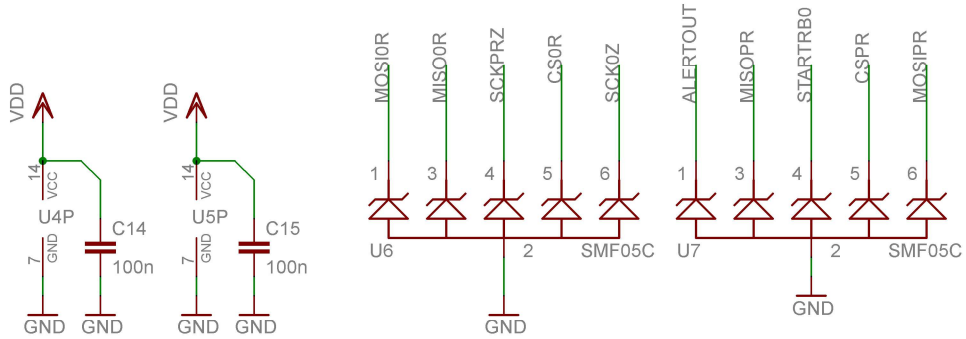

POWER selector

3xSPI,8xCS.2xGPIO

Buffer drivers CS0, CSPWR + power in

TITLE: pi expansion 24.4	
Document Number:	REV:
Date: 19/11/2020 10:35:33p	Sheet: 2/20

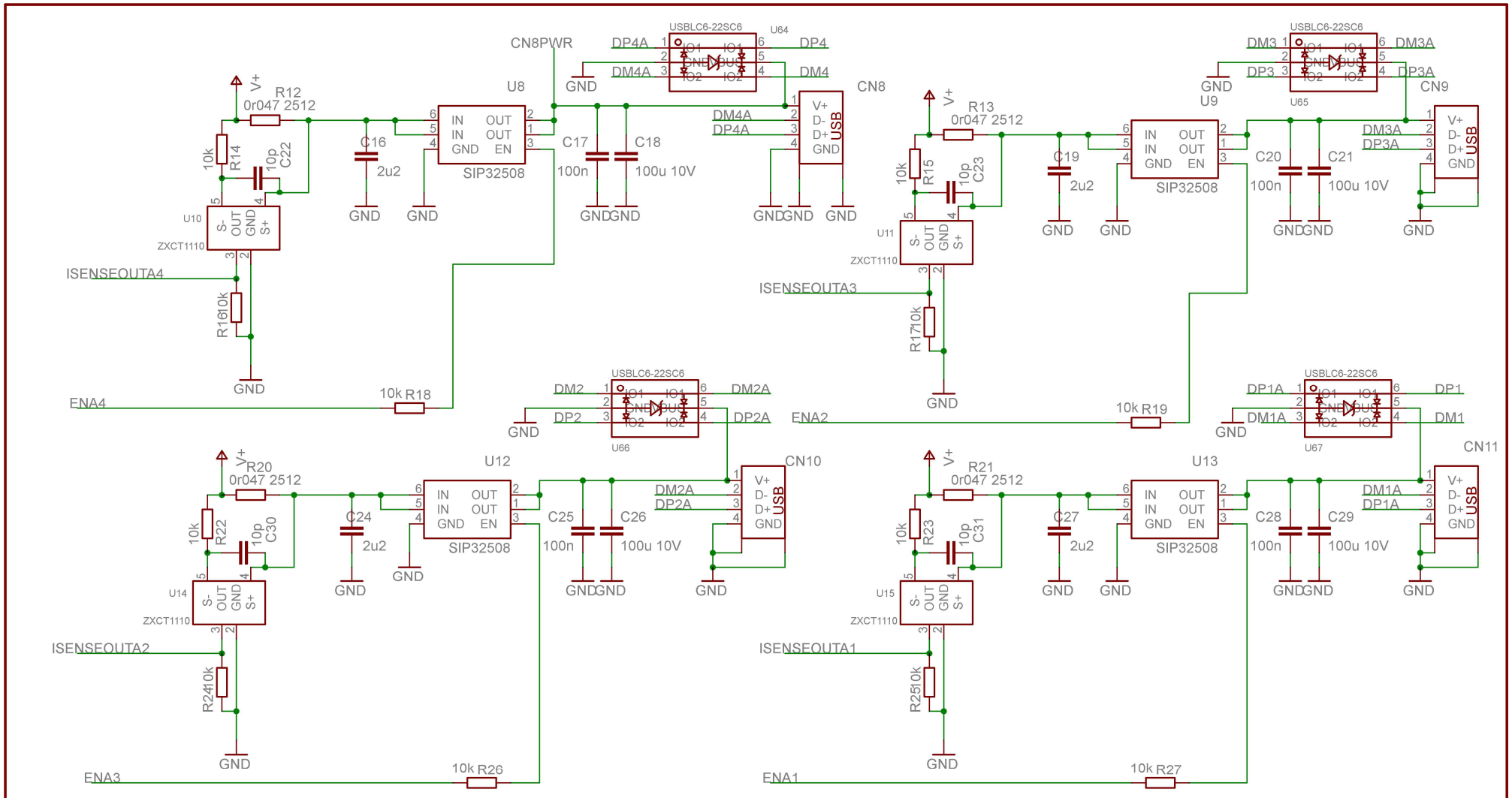

4xA2d,4xGPIO

USB sockets and power control FE1.1S A

TITLE: pi expansion 24.4	
Document Number:	REV:
Date: 19/11/2020 10:35:33p	Sheet: 3/20

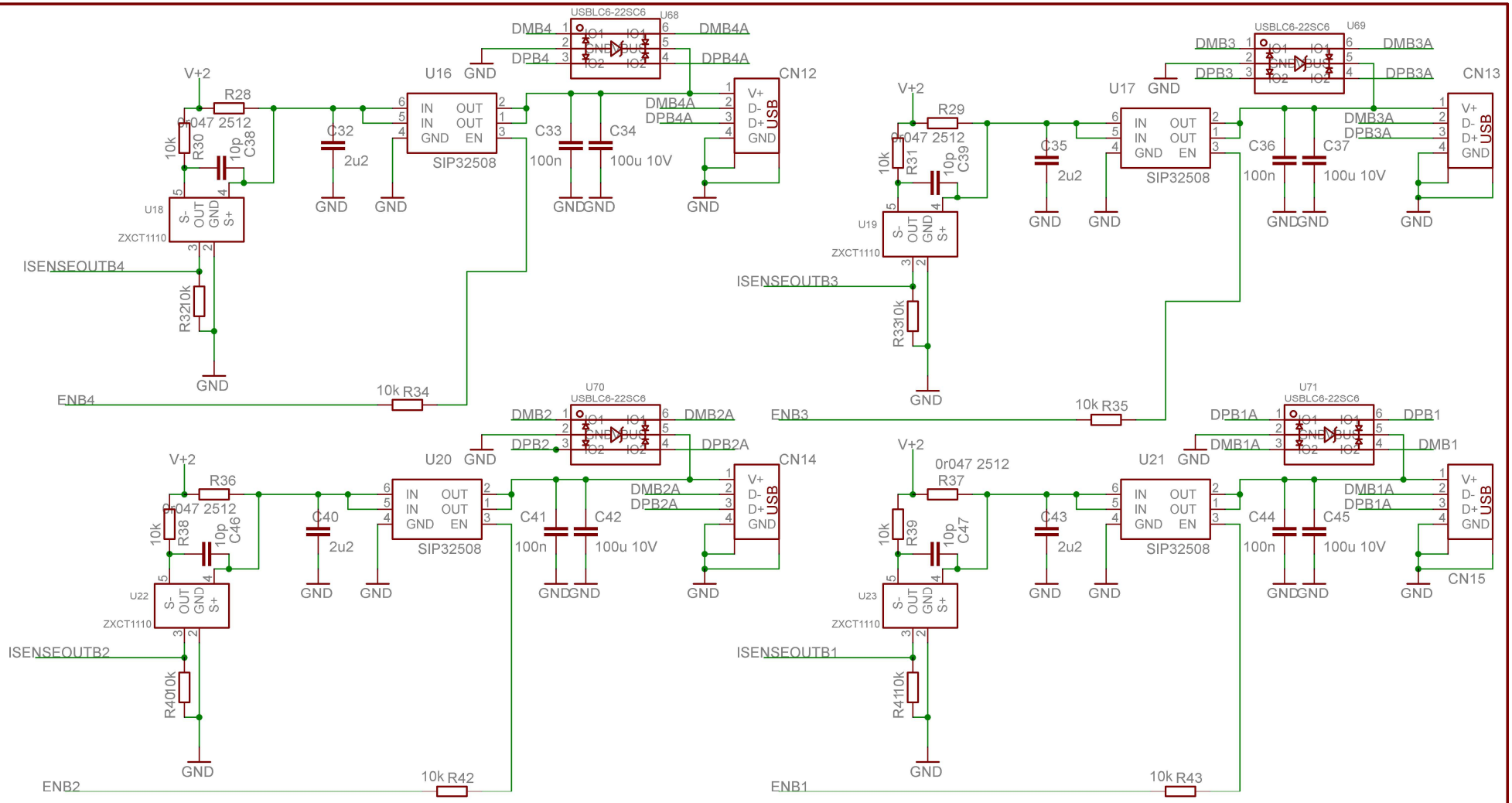

4xA2d,4xGPIO

USB sockets and power control FE1.1S B

TITLE: pi expansion 24.4

Document Number:

REV:

Date: 19/11/2020 10:35:33p

Sheet: 4/20

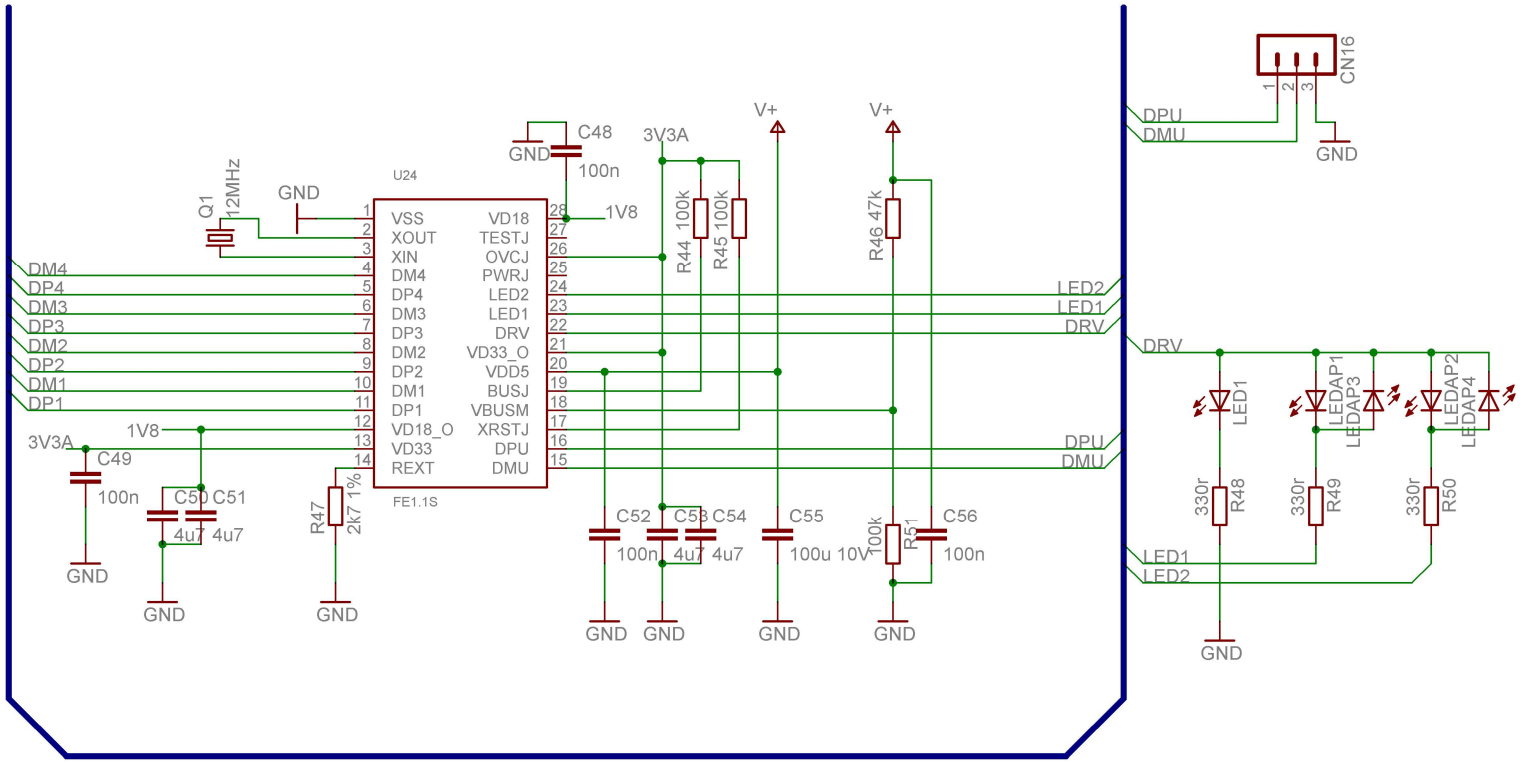

100mA

2x to Pi USB

FE1.1S A connections

TITLE: pi expansion 24.4

Document Number:

REV:

Date: 19/11/2020 10:35:33p

Sheet: 5/20

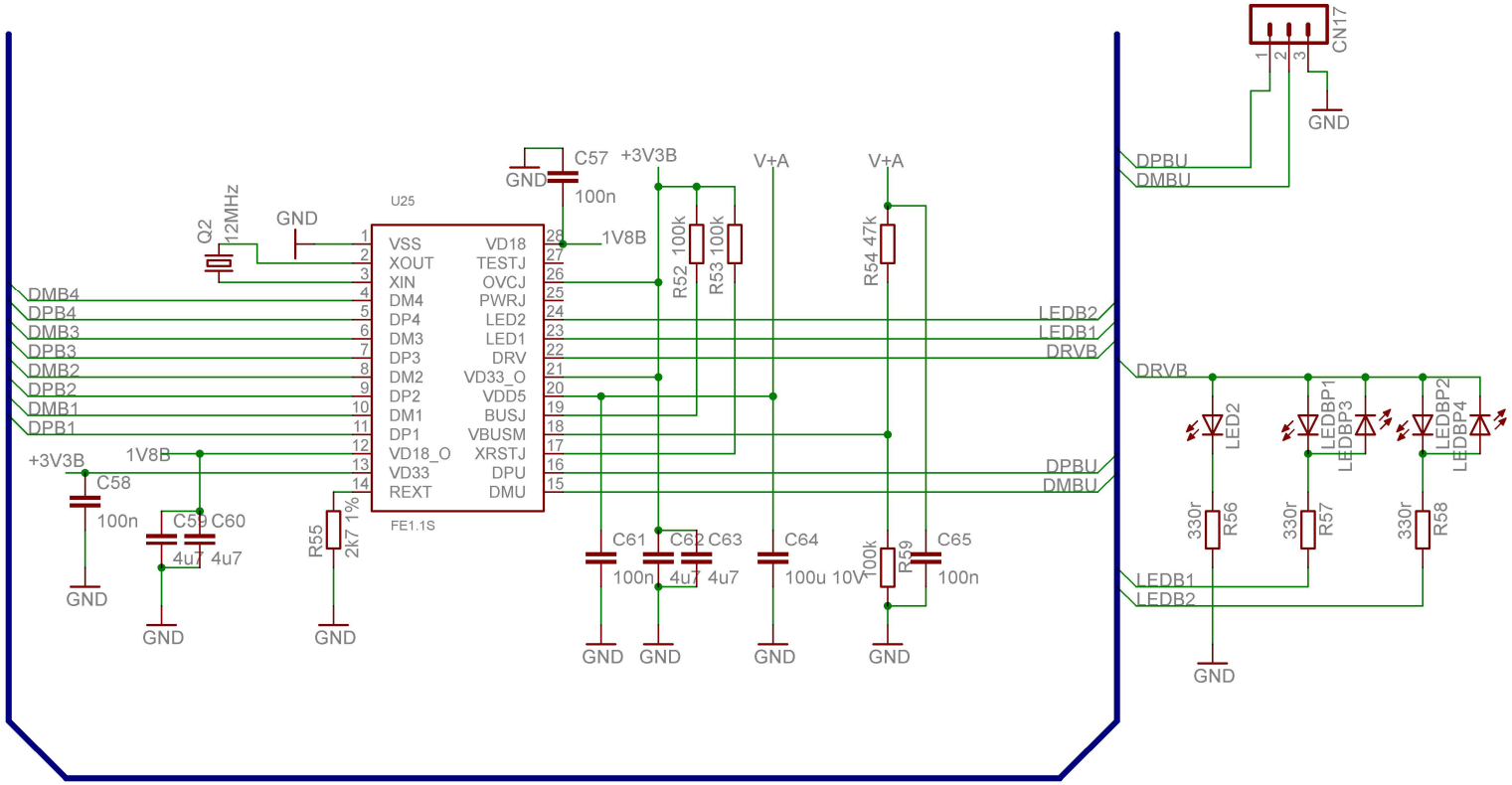

100mA

2x to Pi USB

FE1.1S B connections

TITLE: pi expansion 24.4

Document Number:

REV:

Date: 19/11/2020 10:35:33p

Sheet: 6/20

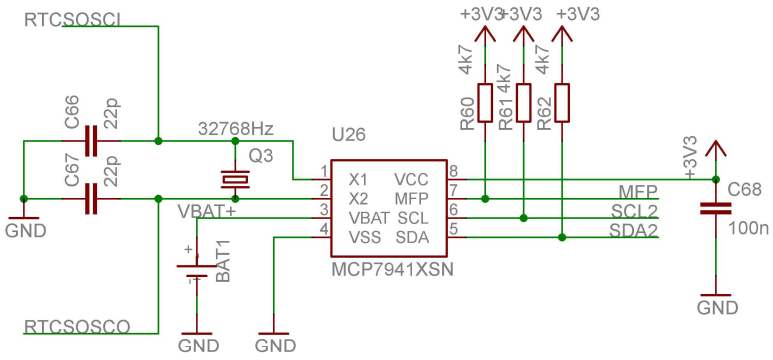

2x to PI I2C 1x GPIO(pi/.k40?)

RTC

TITLE: pi expansion 24.4

Document Number:

REV:

Date: 19/11/2020 10:35:33p

Sheet: 7/20

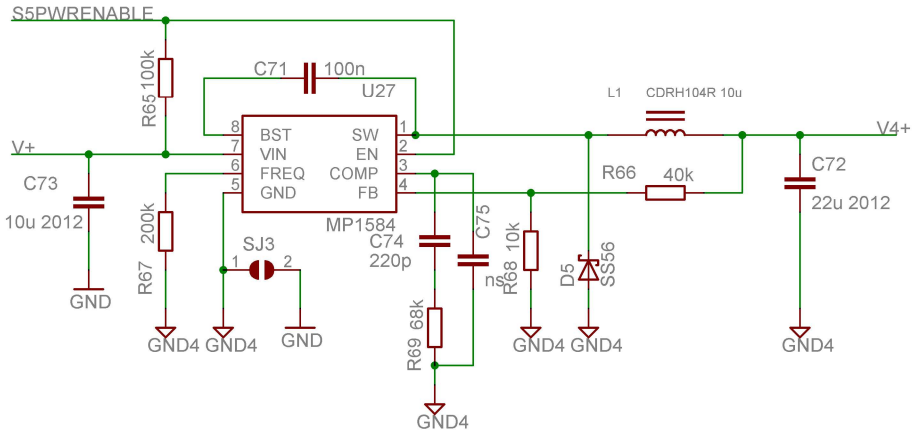

A7RESET,A7PWRKEY,A7PWRENABLE

2xRX-TX,1xRx,2xGPIO.(2xGPIO)

UARTx2.5 2W= 500mA@4V

A7

TITLE: pi expansion 24.4

Document Number:

REV:

Date: 19/11/2020 10:35:33p

Sheet: 8/20

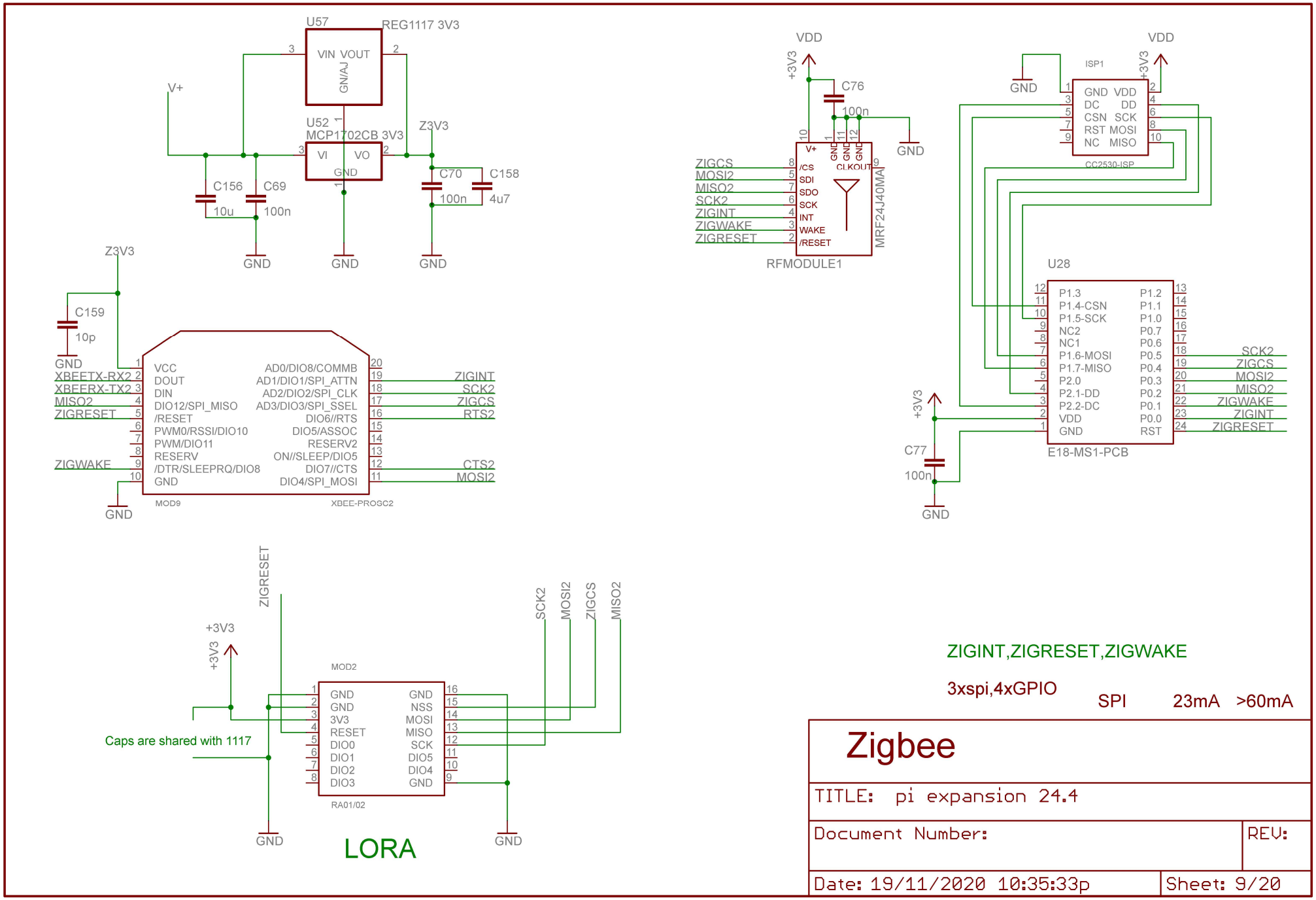
U57
REG1117 3V3
VIN VOUT
GN/AJ
V+
U52
MCP1702CB 3V3
VI VO
GND
Z3V3
C156 10u
C69 100n
C70 100n
C158 4u7
GND
C159 10p
VCC
DOUT
DIN
DIO12/SPI_MISO
/RESET
PWM0/RSSI/DIO10
PWM/DIO11
RESERV
/DTR/SLEEPRQ/DIO8
GND
AD0/DIO8/COMMB
AD1/DIO1/SPI_ATTN
AD2/DIO2/SPI_CLK
AD3/DIO3/SPI_SSEL
DIO6//RTS
DIO5/ASSOC
RESERV2
ON//SLEEP/DIO5
DIO7//CTS
DIO4/SPI_MOSI
XBEETX-RX2
XBEERX-TX2
MISO2
ZIGRESET
ZIGWAKE
ZIGINT
SCK2
ZIGCS
RTS2
CTS2
MOSI2
MOD9
XBEE-PROSC2
VDD
+3V3
C76 100n
V+
GND
CLKOUT
/CS
SDI
SDO
SCK
INT
WAKE
/RESET
ZIGCS
MOSI2
MISO2
SCK2
ZIGINT
ZIGWAKE
ZIGRESET
MRF24J40MA
RFMODULE1
ISP1
GND VDD
DC DD
CSN SCK
RST MOSI
NC MISO
CC2530-ISP
U28
P1.3
P1.4-CSN
P1.5-SCK
NC2
NC1
P1.6-MOSI
P1.7-MISO
P2.0
P2.1-DD
P2.2-DC
VDD
GND
P1.2
P1.1
P1.0
P0.7
P0.6
P0.5
P0.4
P0.3
P0.2
P0.1
P0.0
RST
E18-MS1-PCB
C77 100n
ZIGRESET
SCK2
MOSI2
ZIGCS
MISO2
MOD2
GND
3V3
RESET
DIO0
DIO1
DIO2
DIO3
NSS
MOSI
MISO
SCK
DIO5
DIO4
RA01/02
Caps are shared with 1117
LORA
ZIGINT,ZIGRESET,ZIGWAKE
3xspi,4xGPIO
SPI
23mA
>60mA
Zigbee
TITLE: pi expansion 24.4
Document Number:
REV:
Date: 19/11/2020 10:35:33p
Sheet: 9/20

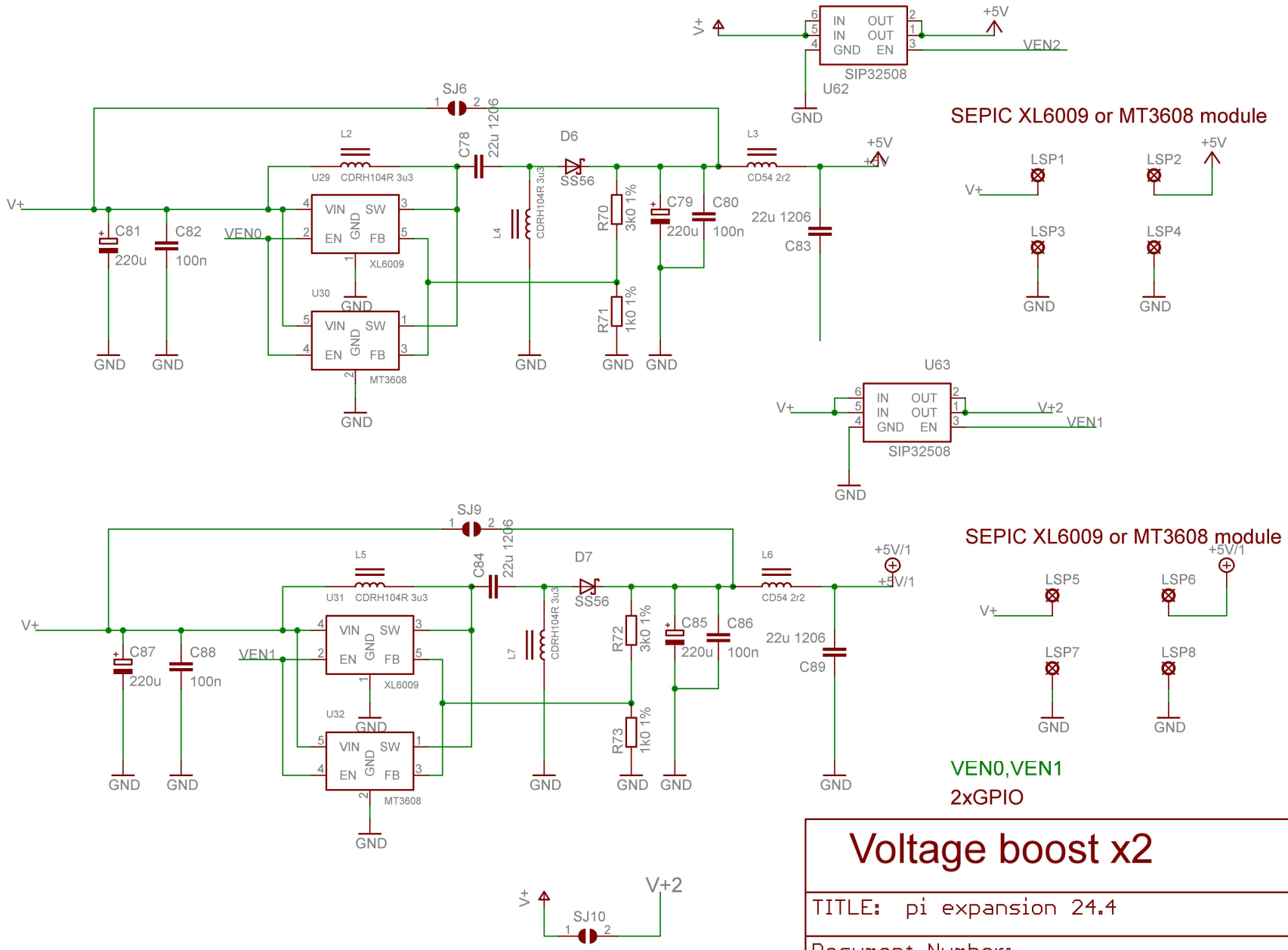

Voltage boost x2

TITLE: pi expansion 24.4

Document Number:

REV:

Date: 19/11/2020 10:35:33p

Sheet: 10/20

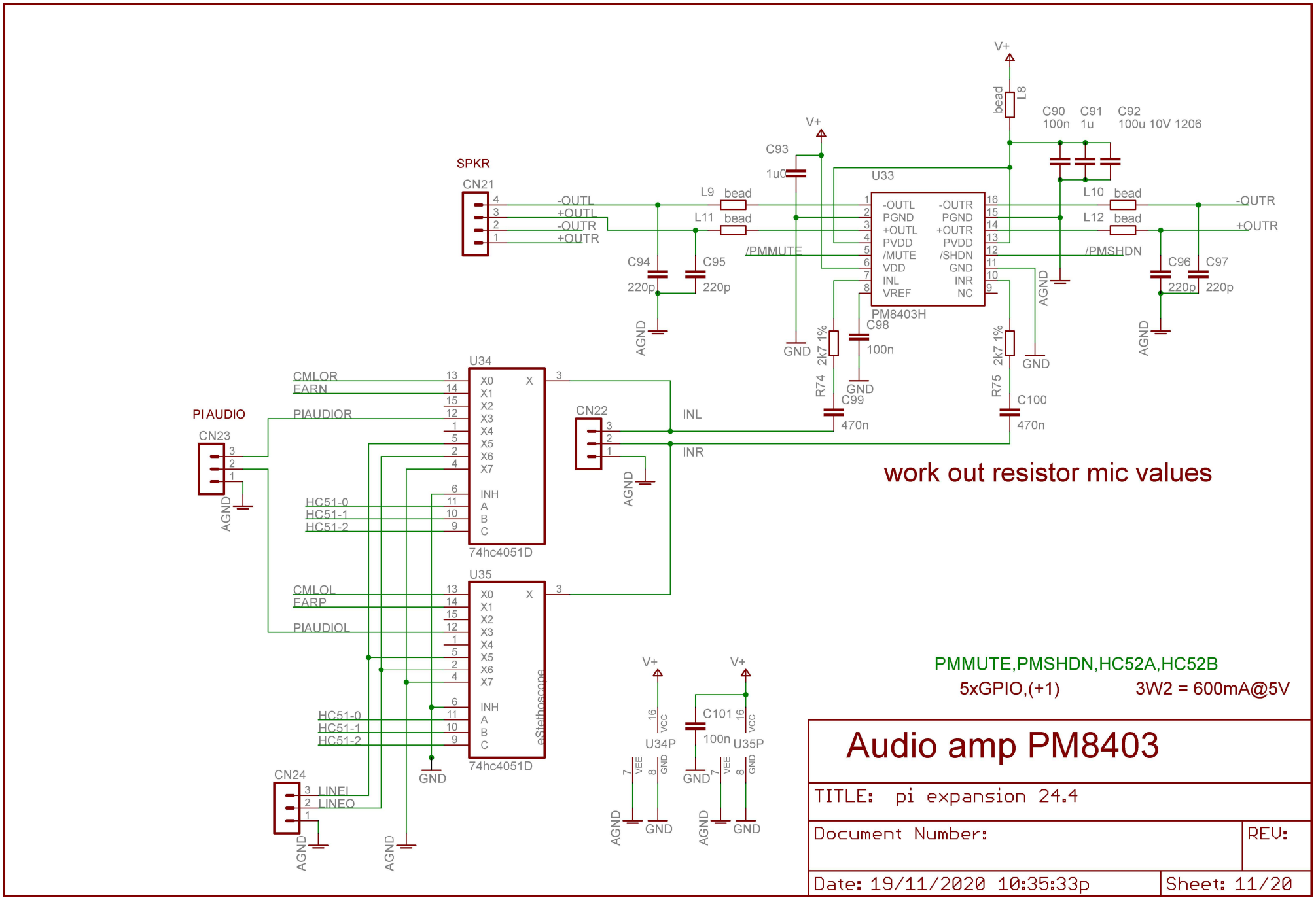

Audio amp PM8403

TITLE: pi expansion 24.4

Document Number:

REV:

Date: 19/11/2020 10:35:33p

Sheet: 11/20

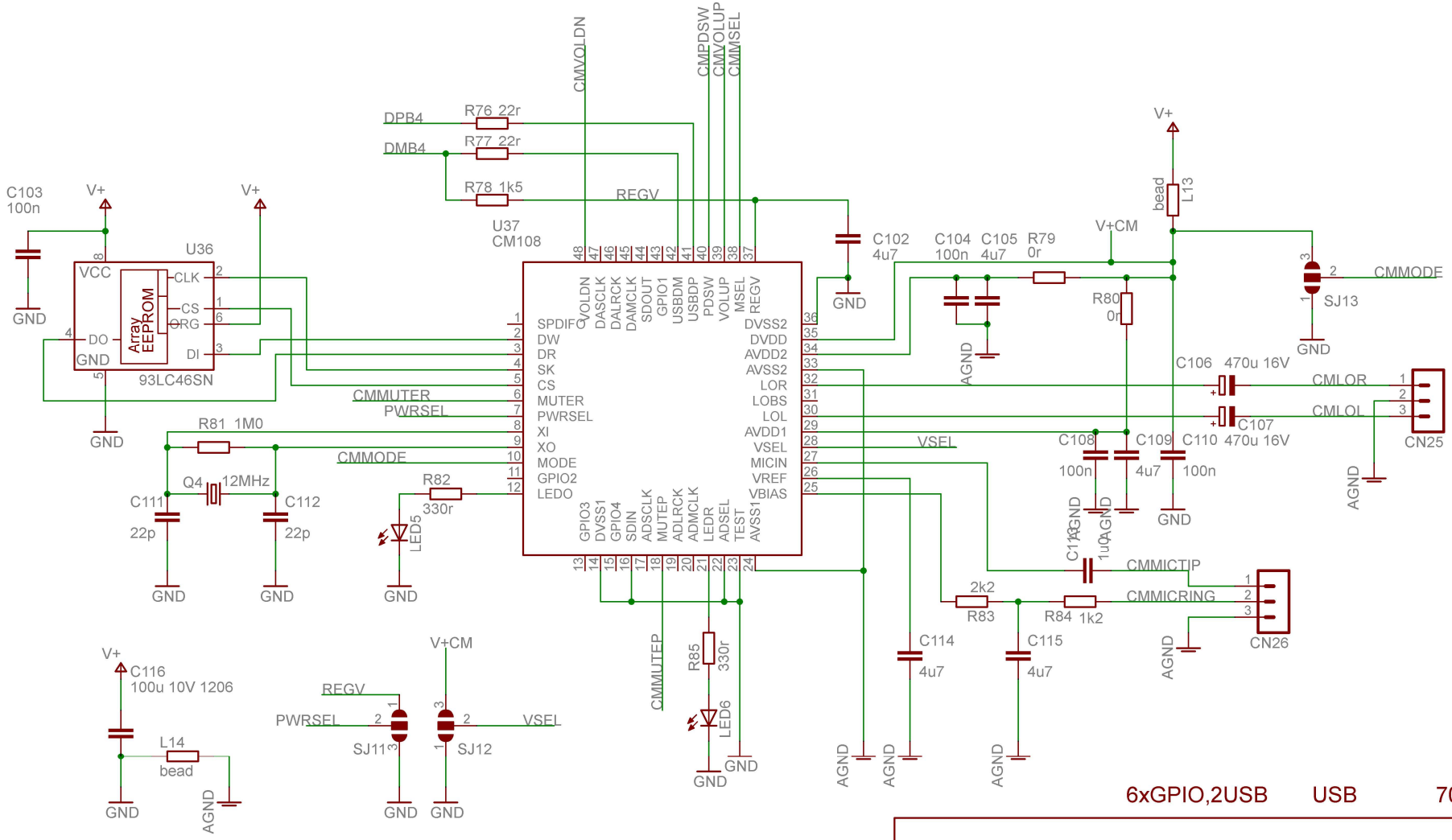

6xGPIO,2USB USB 70mA

CM108 USB AUDIO IO controller

TITLE: pi expansion 24.4

Document Number:

REV:

Date: 19/11/2020 10:35:33p

Sheet: 12/20

CMMUTER,CMVOLDN,CNVOLUP,CMMSEL,CMPDSW,CMMUTEP,CMMODE

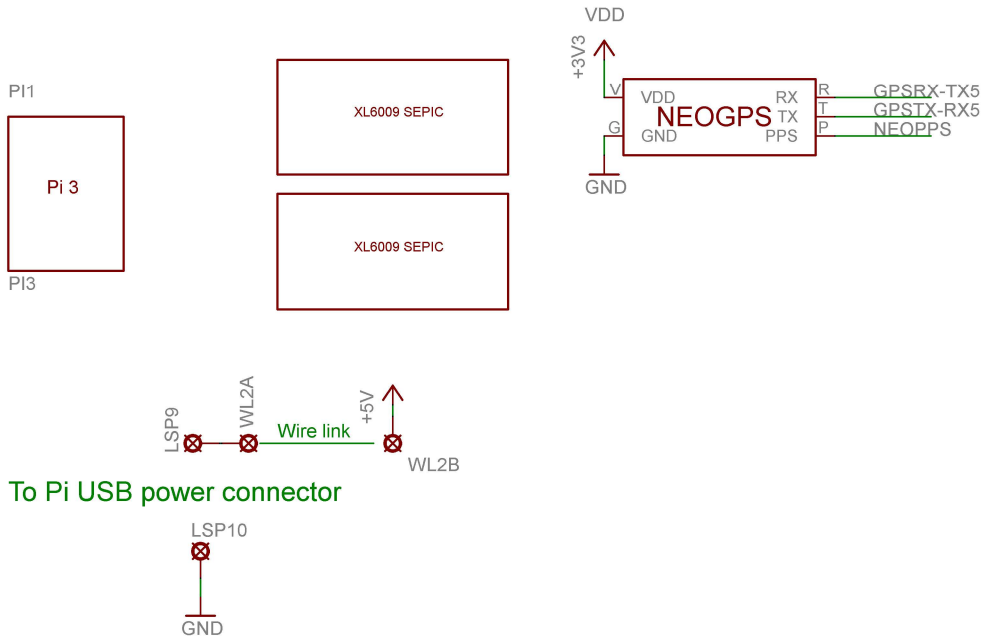

TITLE: pi expansion 24.4

Document Number:

REV:

Date: 19/11/2020 10:35:33p

Sheet: 13/20

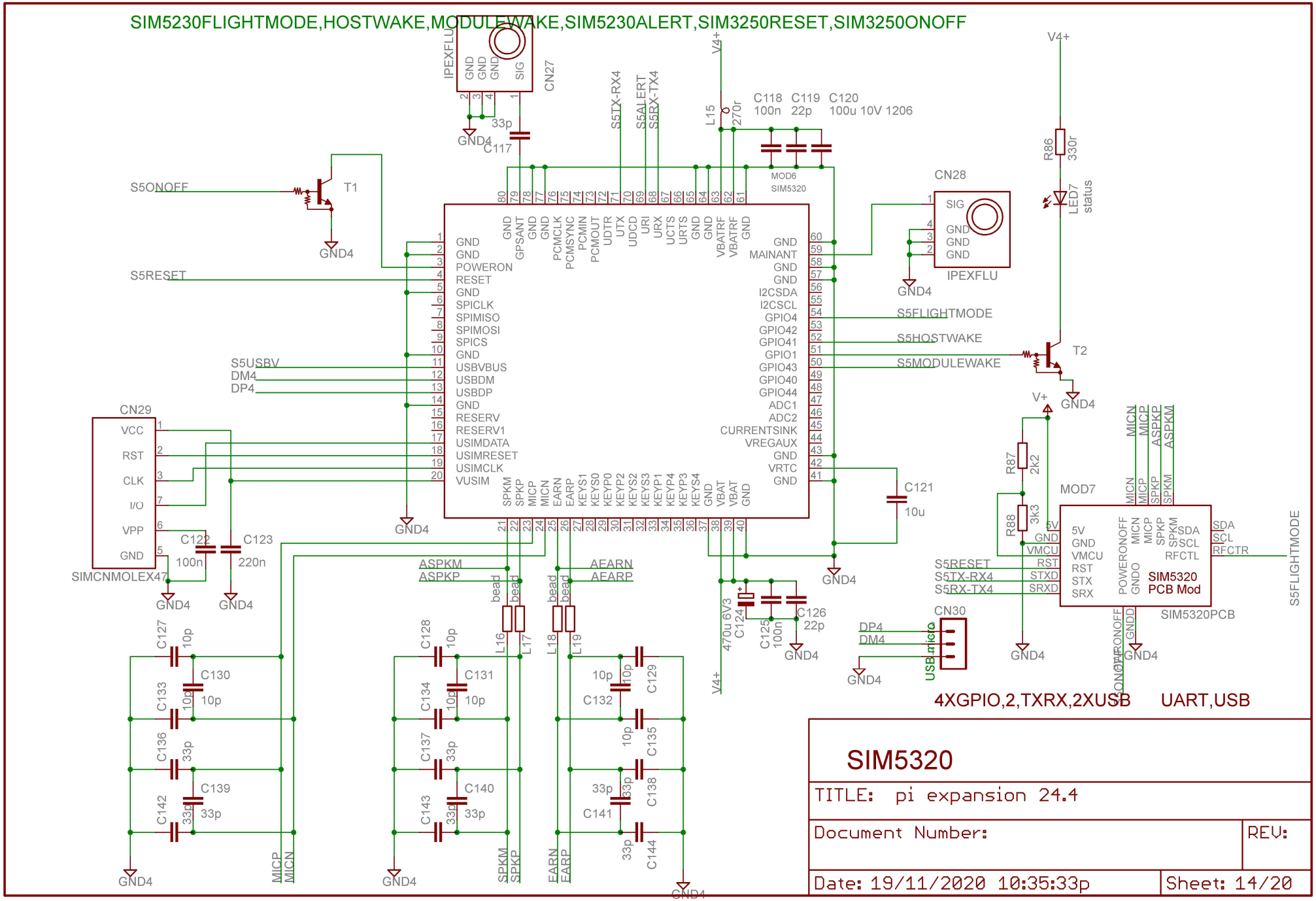
SIM5230FLIGHTMODE,HOSTWAKE,MODULEWAKE,SIM5230ALERT,SIM3250RESET,SIM3250ONOFF
IPEXFLU
CN27
GND
GND
GND
SIG
33p
C117
GND4
S5TX-RX4
S5ALERT
S5RX-TX4
V4+
L15
270r
C118
100n
C119
22p
C120
100u 10V 1206
MOD6
SIM5320
S5ONOFF
T1
GND4
S5RESET
S5USBV
DM4
DP4
CN29
VCC
RST
CLK
I/O
VPP
GND
SIMCNMOLEX47
C122
100n
C123
220n
GND4
GND4
GND
GND
POWERON
RESET
GND
SPICLK
SPIMISO
SPIMOSI
SPICS
GND
USBVBUS
USBDM
USBDP
GND
RESERV
RESERV1
USIMDATA
USIMRESET
USIMCLK
VUSIM
GND
GPSANT
GND
GND
PCMCLK
PCMSYNC
PCMIN
PCMOUT
UDTR
UTX
UDCD
URI
URX
UCTS
URTS
GND
GND
VBATRF
VBATRF
GND
GND
MAINANT
GND
GND
I2CSDA
I2CSCL
GPIO4
GPIO42
GPIO41
GPIO1
GPIO43
GPIO40
GPIO44
ADC1
ADC2
CURRENTSINK
VREGAUX
GND
VRTC
GND
SPKM
SPKP
MICP
MICN
EARN
EARP
KEYS1
KEYS0
KEYP0
KEYP2
KEYS2
KEYS3
KEYP1
KEYP4
KEYP3
KEYS4
GND
VBAT
VBAT
GND
CN28
SIG
GND
GND
GND
IPEXFLU
GND4
S5FLIGHTMODE
S5HOSTWAKE
S5MODULEWAKE
T2
GND4
V4+
R86
330r
LED7
status
V+
R87
2k2
R88
3k3
C121
10u
GND4
ASPKM
ASPKP
AEARN
AEARP
bead
bead
bead
bead
L16
L17
L18
L19
470u 6V3
C124
C125
100n
C126
22p
GND4
V4+
MICN
MICP
ASPKP
ASPKM
MOD7
5V
GND
VMCU
RST
STX
SRX
POWERONOFF
MICN
MICP
SPKP
SPKM
SDA
SSCL
RFCTL
GNDO
SIM5320
PCB Mod
SIM5320PCB
SDA
SCL
RFCTR
S5FLIGHTMODE
S5RESET
S5TX-RX4
S5RX-TX4
GND4
GND4
CN30
USB micro
DP4
DM4
GND4
GND4
4XGPIO,2,TXRX,2XUSB
UART,USB
C127
10p
C130
10p
C133
10p
C136
33p
C139
33p
C142
33p
GND4
MICP
MICN
C128
10p
C131
10p
C134
10p
C137
33p
C140
33p
C143
33p
GND4
SPKM
SPKP
10p
C129
C132
10p
C135
33p
C138
C141
33p
C144
EARN
EARP
GND4
SIM5320
TITLE: pi expansion 24.4
Document Number:
REV:
Date: 19/11/2020 10:35:33p
Sheet: 14/20

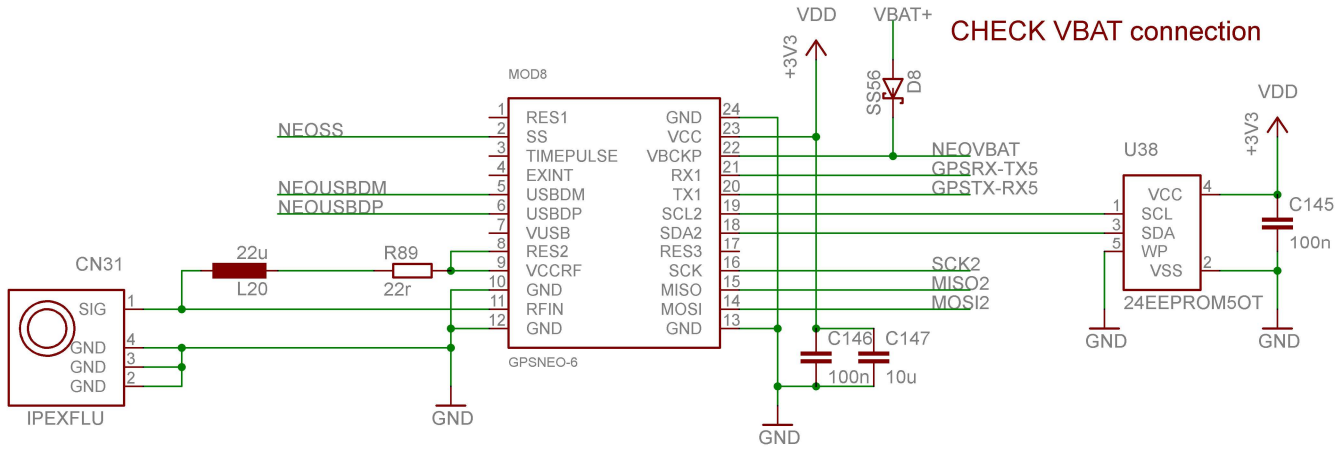

Connector for NEO PCB module

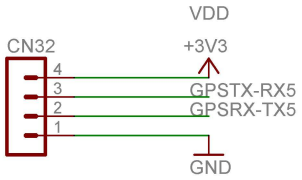

NEOSS

3Xspi,2xUSB,1xGPIO,TXRX USB,UART,SPI

GPS	
TITLE: pi expansion 24.4	
Document Number:	REV:
Date: 19/11/2020 10:35:33p	Sheet: 15/20

Touch screen interface

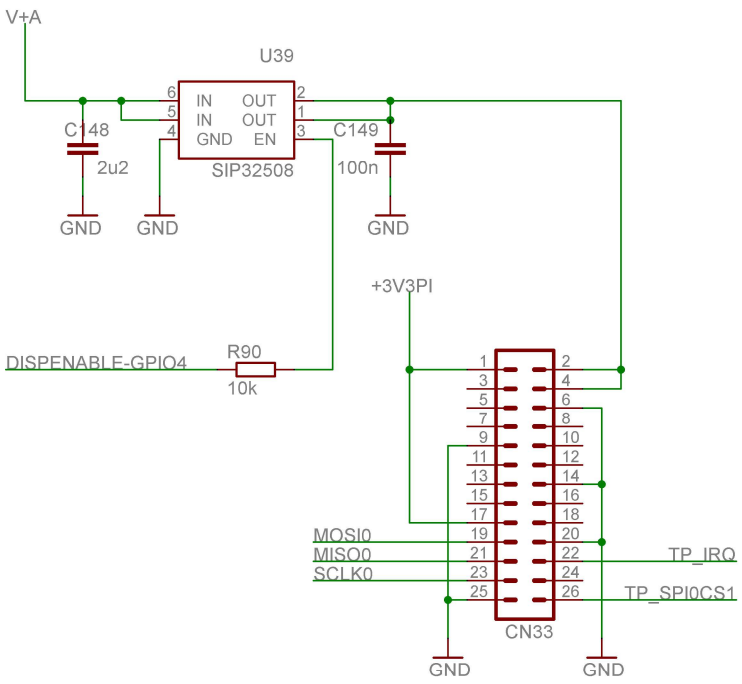

Pi GPIO

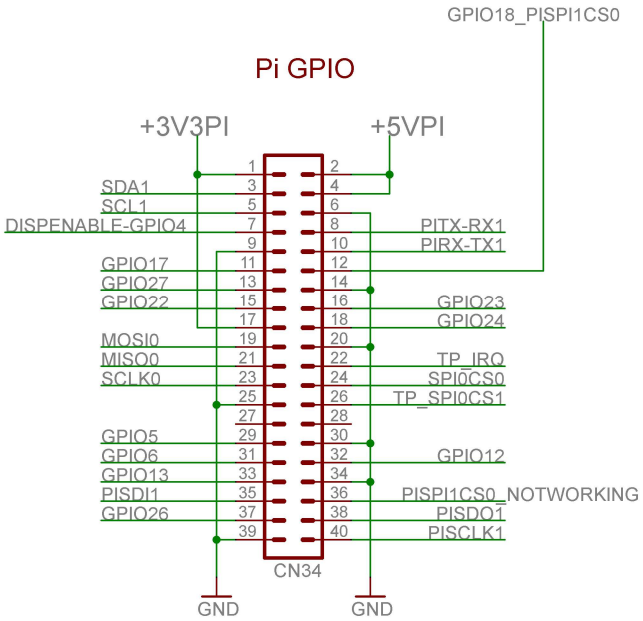

DISPENABLE

3xSPI,2xTXRX,2xGPIO

Pi GPIO expansion port and touch screen interface

TITLE: pi expansion 24.4

Document Number:

REV:

Date: 19/11/2020 10:35:33p

Sheet: 16/20

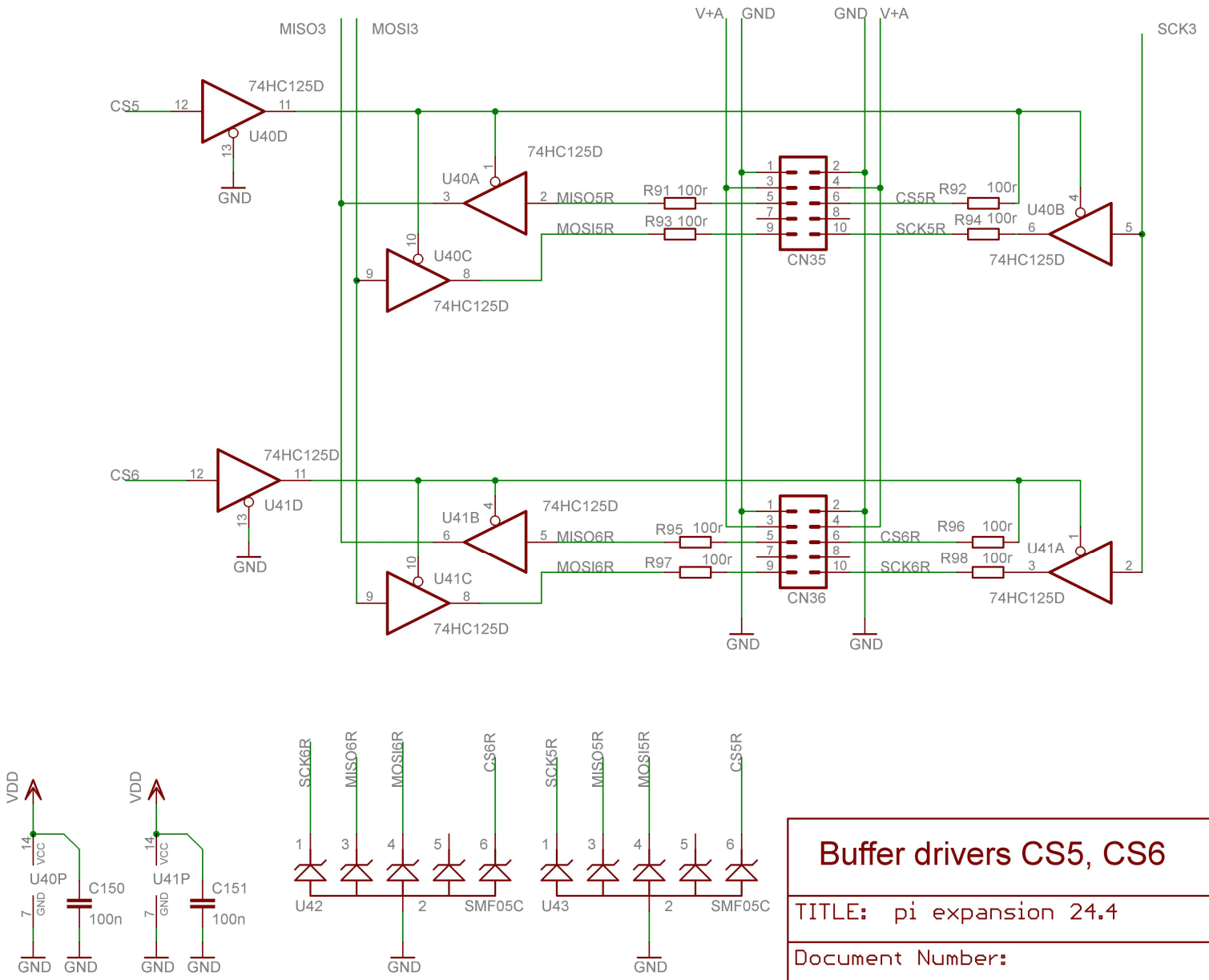

Buffer drivers CS5, CS6

TITLE: pi expansion 24.4

Document Number:

REV:

Date: 19/11/2020 10:35:33p

Sheet: 17/20

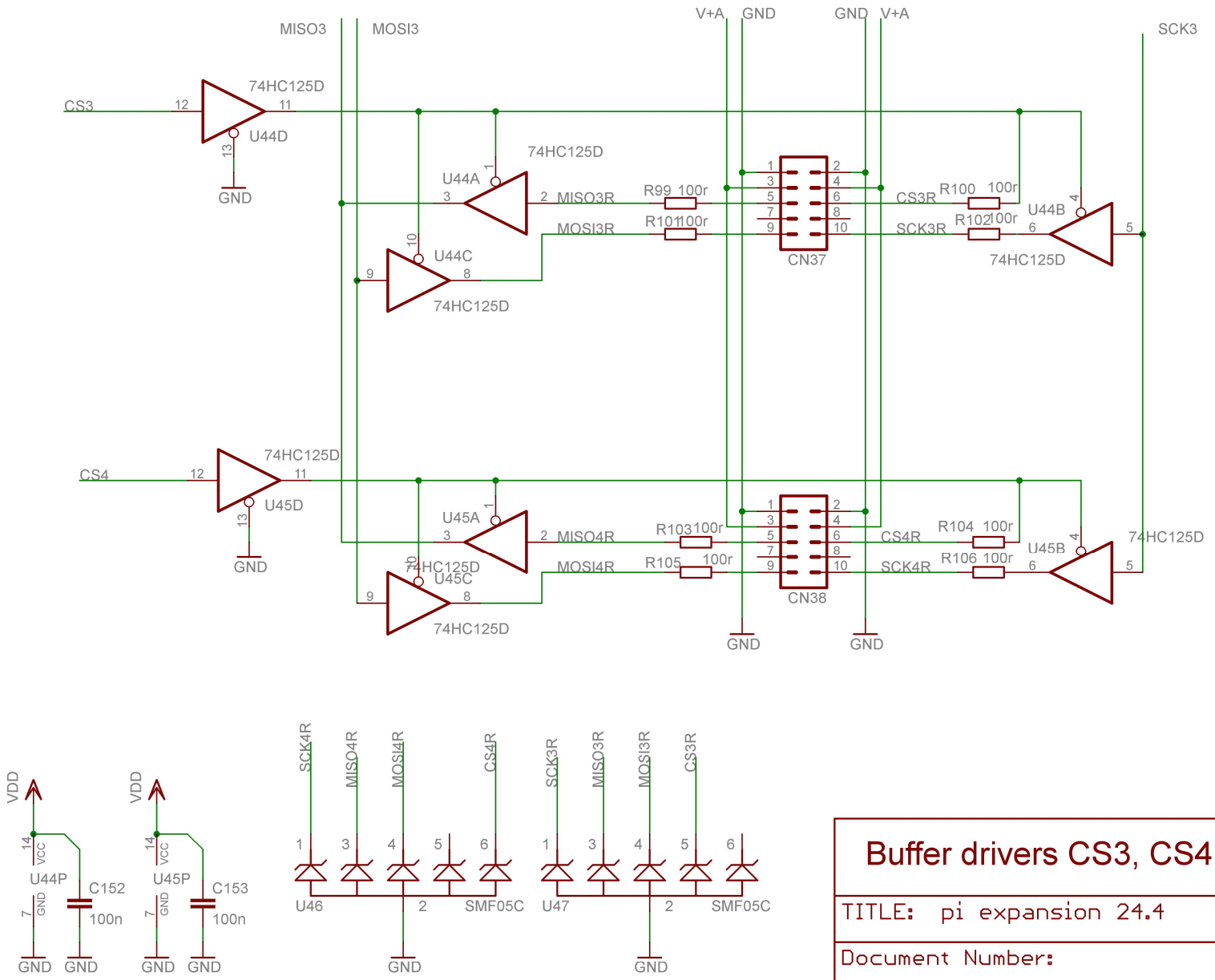

Buffer drivers CS3, CS4

TITLE: pi expansion 24.4

Document Number:

REV:

Date: 19/11/2020 10:35:33p

Sheet: 18/20

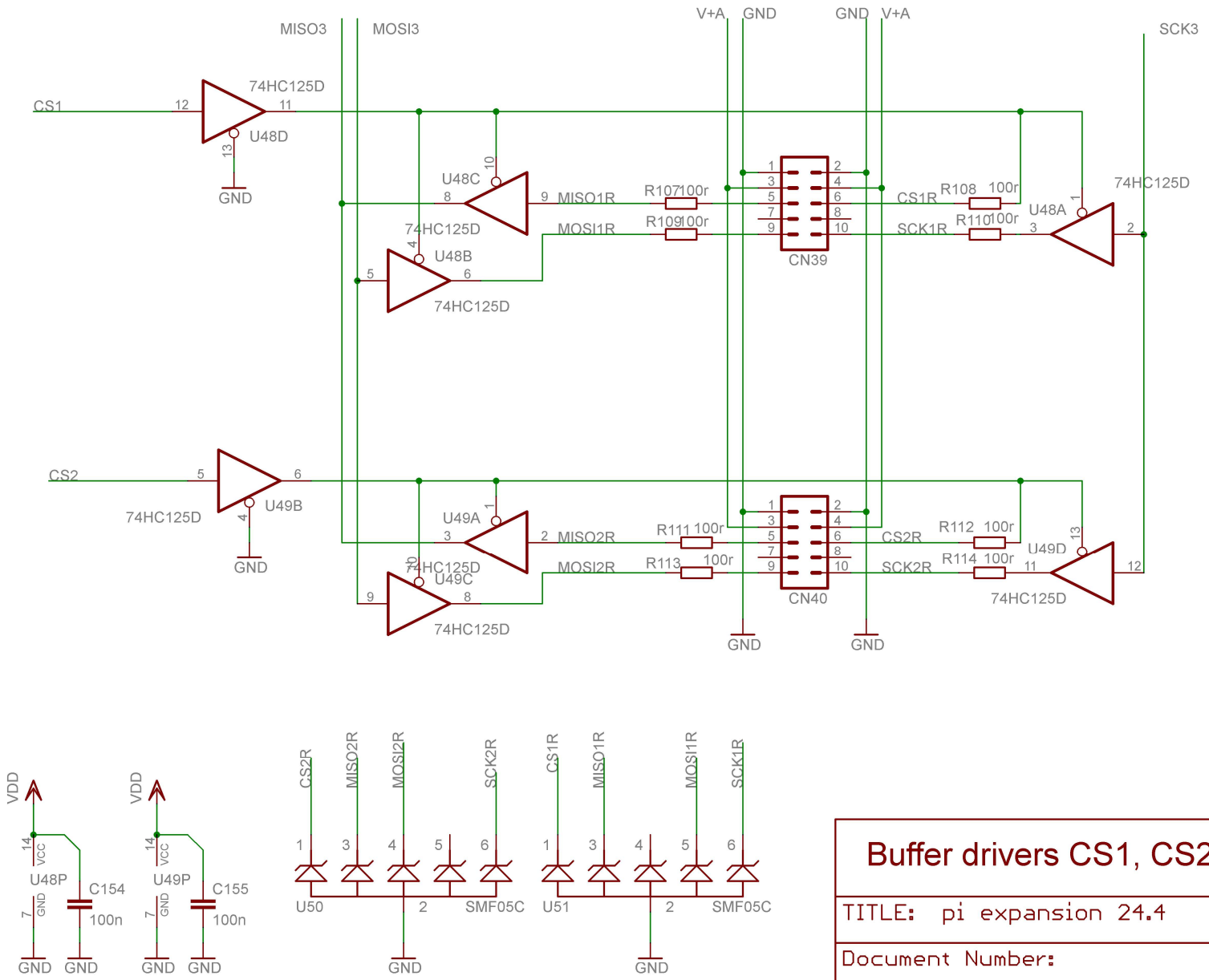

Buffer drivers CS1, CS2

TITLE: pi expansion 24.4

Document Number:

REV:

Date: 19/11/2020 10:35:33p

Sheet: 19/20

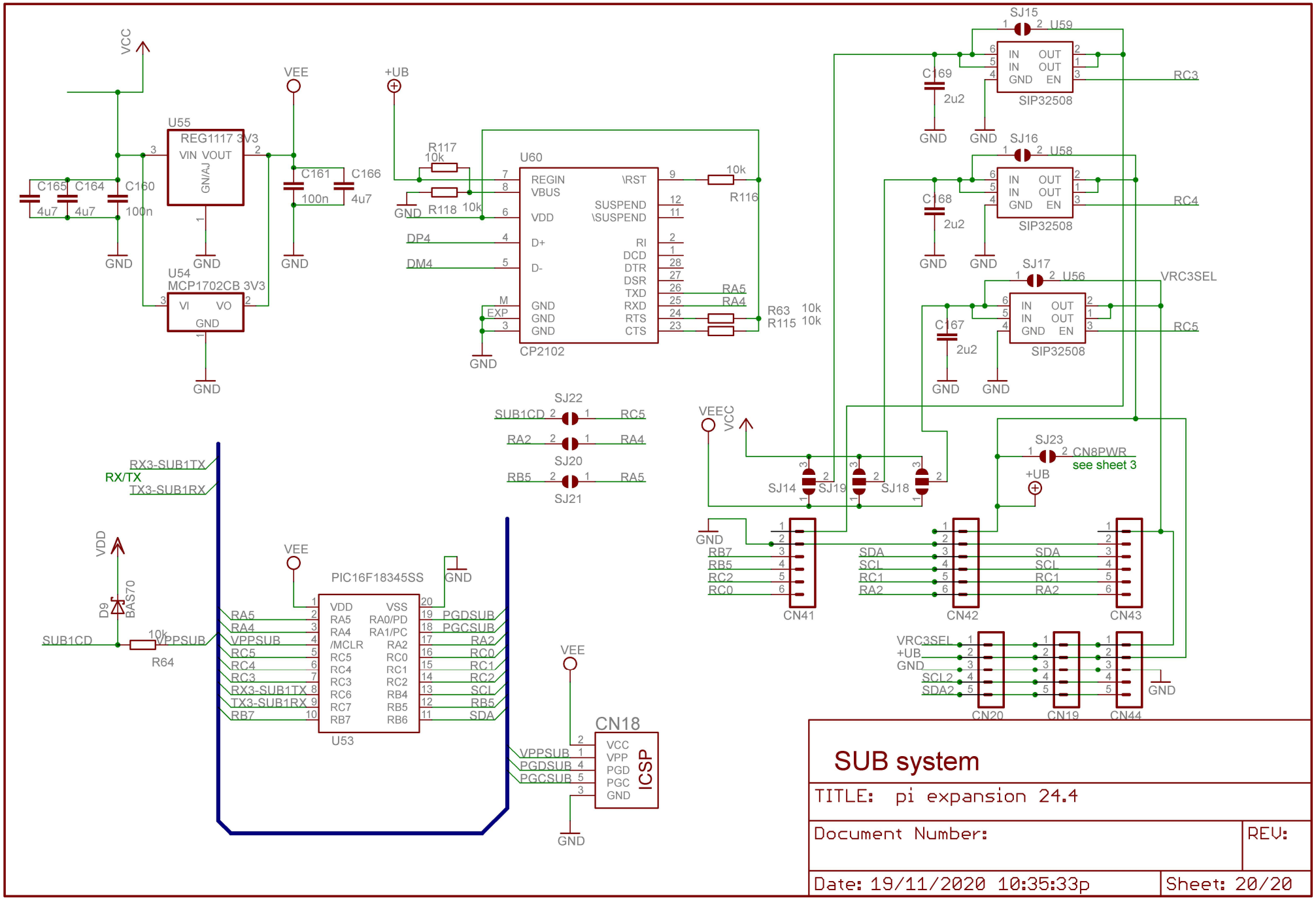

SUB system

TITLE: pi expansion 24.4

Document Number:

REV:

Date: 19/11/2020 10:35:33p

Sheet: 20/20