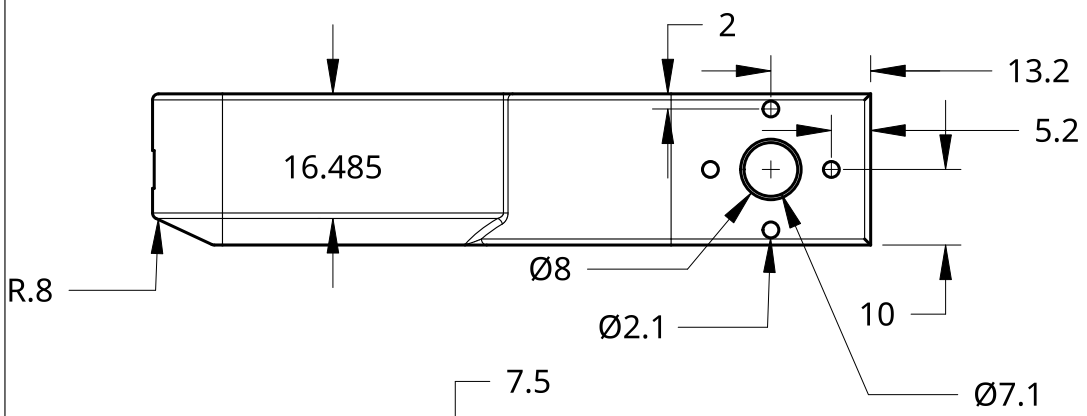

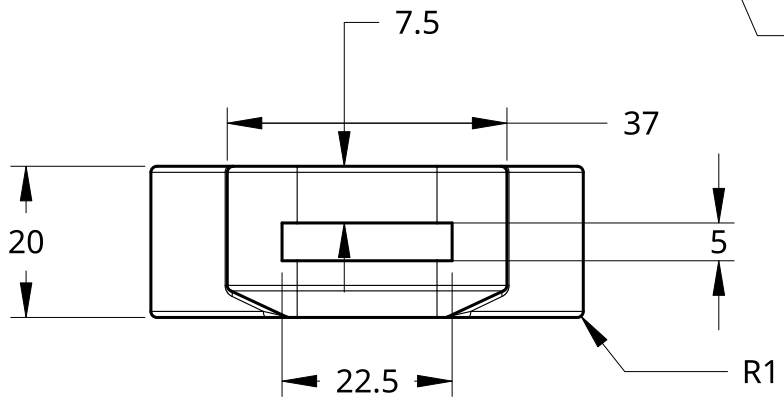

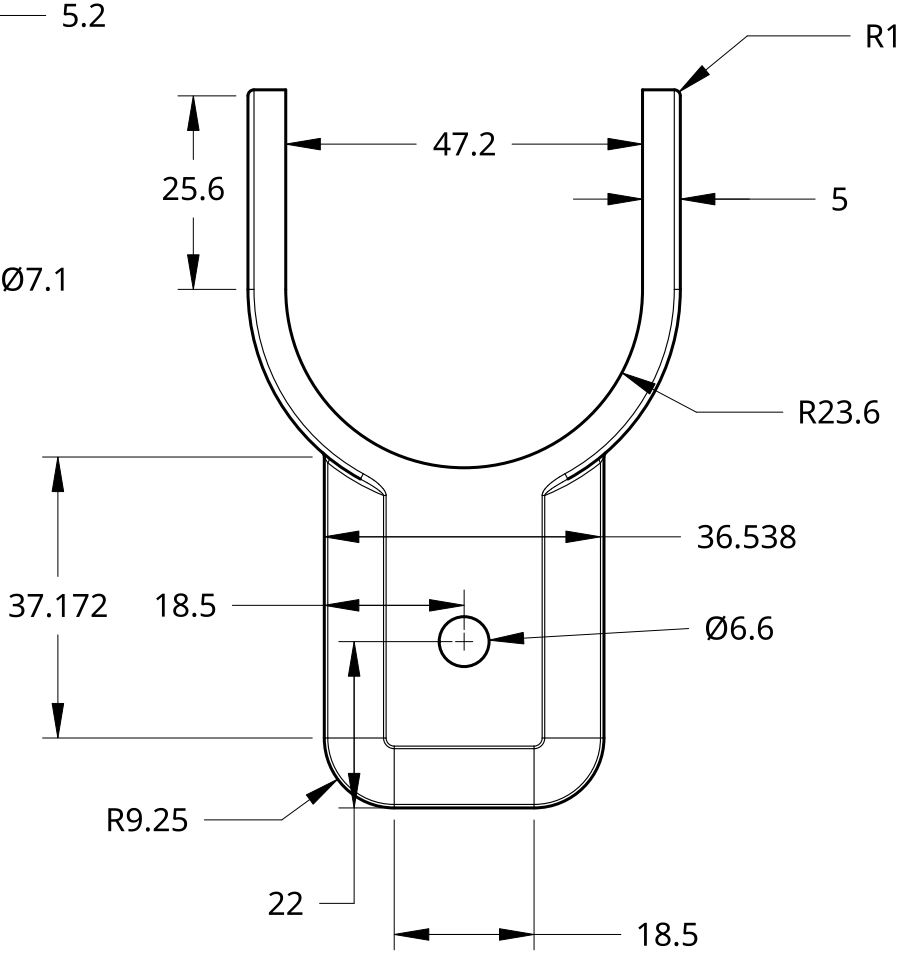

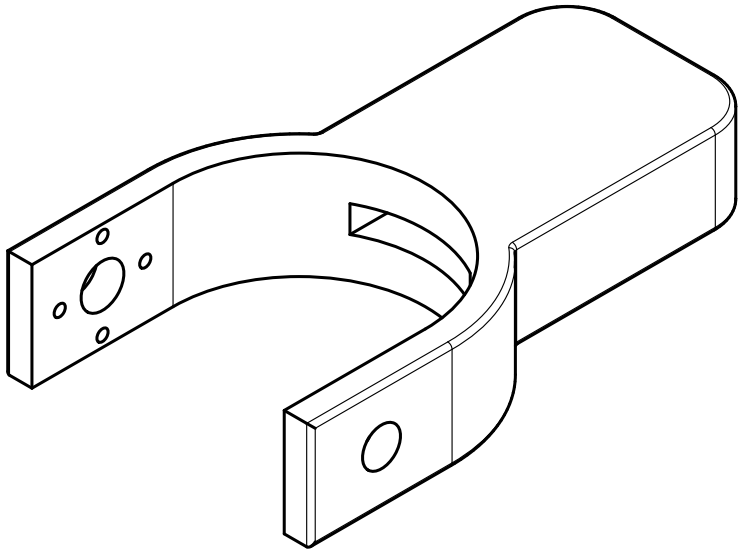

UNLESS OTHERWISE SPECIFIED, DIMENSIONS ARE IN INCHES .XX = ±.0- .XXX = ±.00- .XXXX = ±.000- ANGULAR = ± ° FRACTIONAL = ± SURFACE FINISH		NAME	DATE
	DRAWN	AUGUSTIN FREMONT	02/01/2021
	CHECKED		
	APPROVED		
DO NOT SCALE DRAWING			
BREAK ALL SHARP EDGES AND REMOVE BURRS			
THIRD ANGLE PROJECTION	MATERIAL	FINISH	
	PLA		

TITLE: Pince

SIZE	DWG NO.	REV.
A		

SCALE	WEIGHT	SHEET
1:1	45g	1 of 1