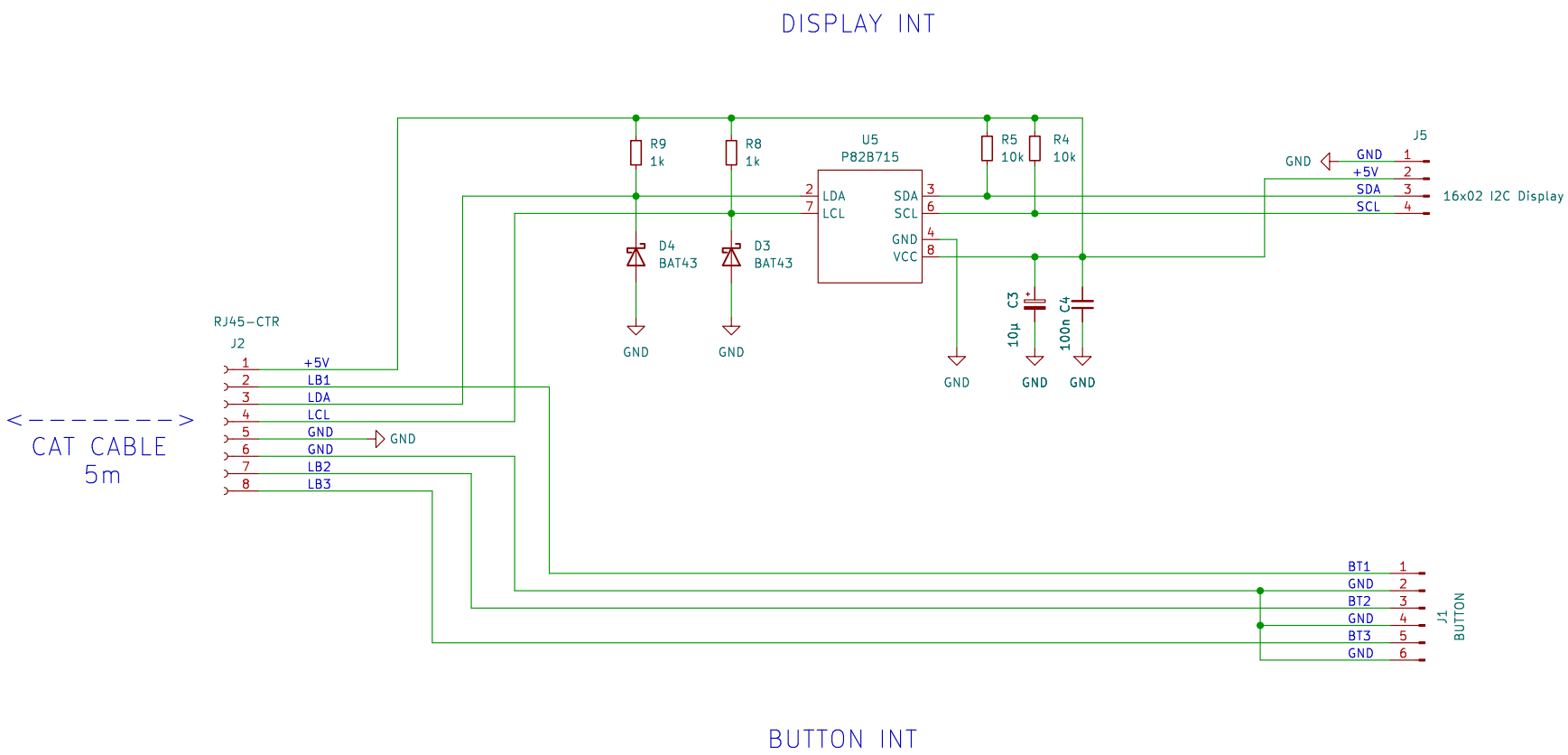

Project ATU-7X7
F.Kapps
Sheet: /
File: ATU-7X7-RC-REM-SEC-VA2.kicad_sch

Title: ATU REMOTE PANEL VA2

Size: A4	Date: 2023-07-02	**Rev: 2**
KiCad E.D.A. kicad 7.0.6-7.0.6~ubuntu22.04.1		Id: 1/1