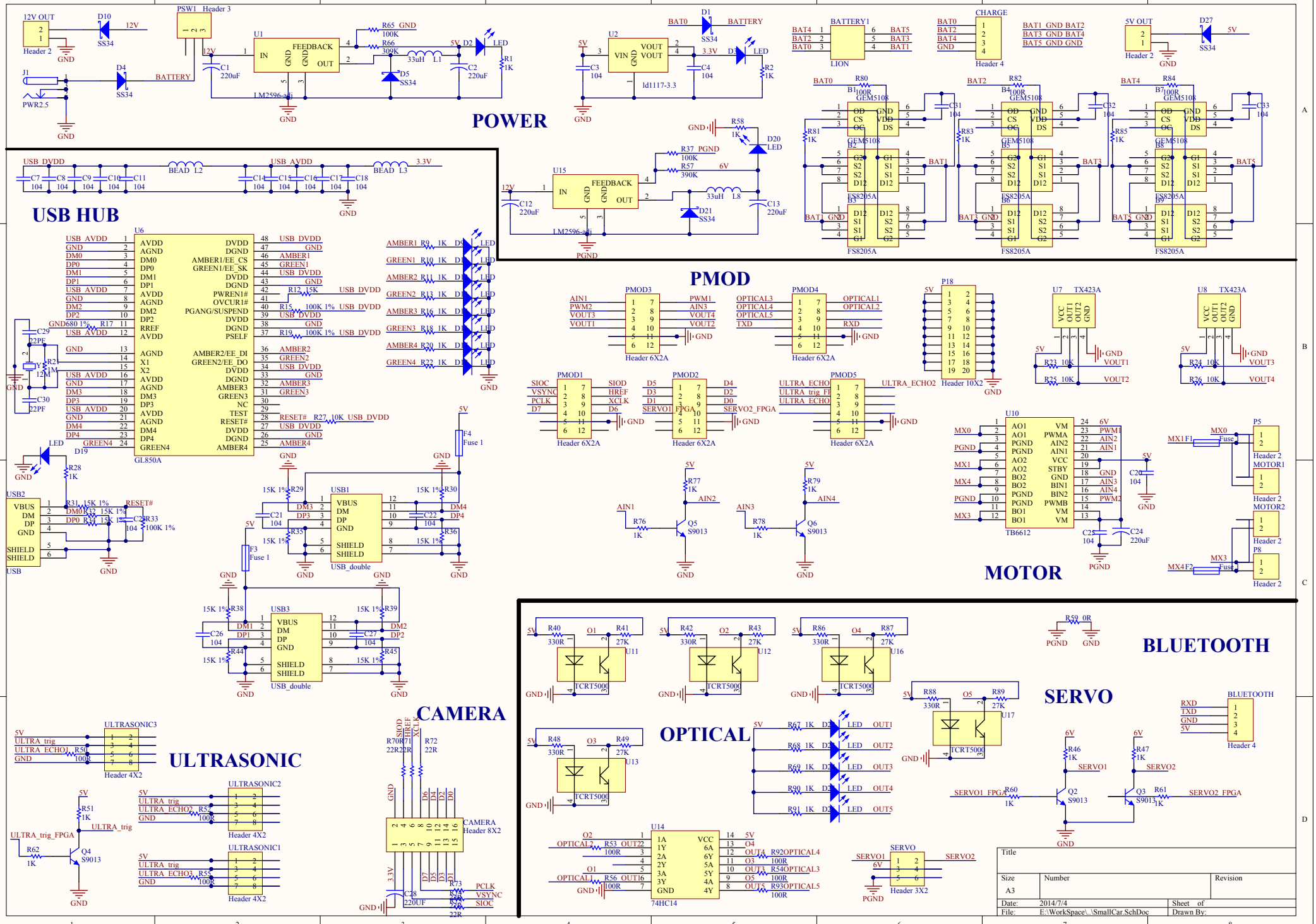
POWER
USB HUB
PMOD
MOTOR
BLUETOOTH
CAMERA
ULTRASONIC
OPTICAL
SERVO
Title
Size
A3
Number
Revision
Date: 2014/7/4
Sheet of
File: E:\WorkSpace\..\SmallCar.SchDoc
Drawn By: