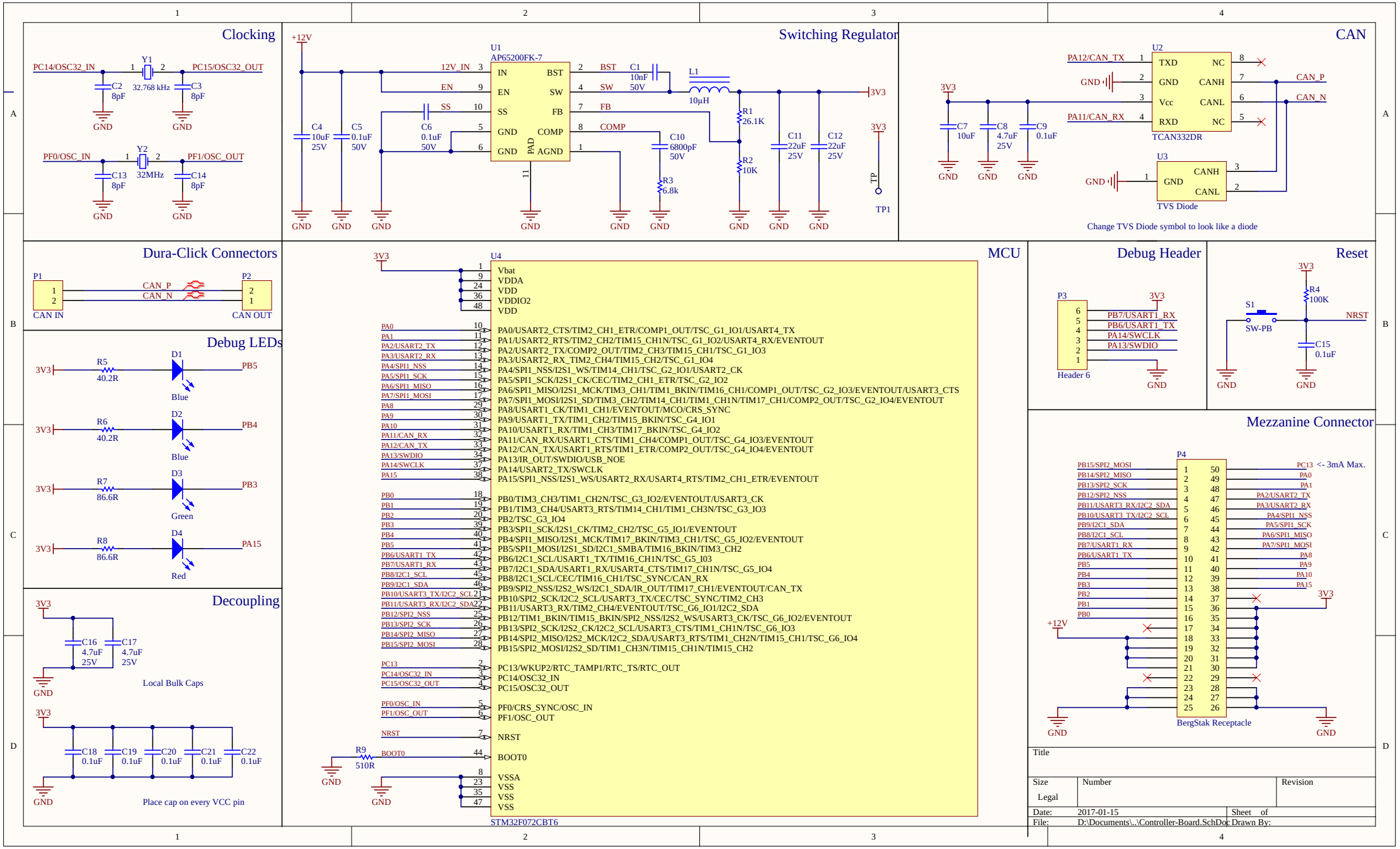
Clocking
PC14/OSC32_IN
PC15/OSC32_OUT
Y1
32.768 kHz
C2 8pF
C3 8pF
GND
PF0/OSC_IN
PF1/OSC_OUT
Y2
32MHz
C13 8pF
C14 8pF
Switching Regulator
+12V
U1
AP65200FK-7
IN
EN
SS
GND
BST
SW
FB
COMP
AGND
PAD
12V_IN
C1 10nF 50V
L1 10µH
R1 26.1K
R2 10K
R3 6.8k
C10 6800pF 50V
C4 10uF 25V
C5 0.1uF 50V
C6 0.1uF 50V
C11 22uF 25V
C12 22uF 25V
3V3
TP1
CAN
U2
TCAN332DR
TXD
RXD
Vcc
CANH
CANL
NC
PA12/CAN_TX
PA11/CAN_RX
CAN_P
CAN_N
C7 10uF
C8 4.7uF 25V
C9 0.1uF
U3
TVS Diode
Change TVS Diode symbol to look like a diode
Dura-Click Connectors
P1
P2
CAN_P
CAN_N
CAN IN
CAN OUT
Debug LEDs
R5 40.2R
R6 40.2R
R7 86.6R
R8 86.6R
D1 Blue
D2 Blue
D3 Green
D4 Red
PB5
PB4
PB3
PA15
Decoupling
C16 4.7uF 25V
C17 4.7uF 25V
Local Bulk Caps
C18 0.1uF
C19 0.1uF
C20 0.1uF
C21 0.1uF
C22 0.1uF
Place cap on every VCC pin
MCU
U4
STM32F072CBT6
Vbat
VDDA
VDD
VDDIO2
PA0/USART2_CTS/TIM2_CH1_ETR/COMP1_OUT/TSC_G1_IO1/USART4_TX
PA1/USART2_RTS/TIM2_CH2/TIM15_CH1N/TSC_G1_IO2/USART4_RX/EVENTOUT
PA2/USART2_TX/COMP2_OUT/TIM2_CH3/TIM15_CH1/TSC_G1_IO3
PA3/USART2_RX_TIM2_CH4/TIM15_CH2/TSC_G1_IO4
PA4/SPI1_NSS/I2S1_WS/TIM14_CH1/TSC_G2_IO1/USART2_CK
PA5/SPI1_SCK/I2S1_CK/CEC/TIM2_CH1_ETR/TSC_G2_IO2
PA6/SPI1_MISO/I2S1_MCK/TIM3_CH1/TIM1_BKIN/TIM16_CH1/COMP1_OUT/TSC_G2_IO3/EVENTOUT/USART3_CTS
PA7/SPI1_MOSI/I2S1_SD/TIM3_CH2/TIM14_CH1/TIM1_CH1N/TIM17_CH1/COMP2_OUT/TSC_G2_IO4/EVENTOUT
PA8/USART1_CK/TIM1_CH1/EVENTOUT/MCO/CRS_SYNC
PA9/USART1_TX/TIM1_CH2/TIM15_BKIN/TSC_G4_IO1
PA10/USART1_RX/TIM1_CH3/TIM17_BKIN/TSC_G4_IO2
PA11/CAN_RX/USART1_CTS/TIM1_CH4/COMP1_OUT/TSC_G4_IO3/EVENTOUT
PA12/CAN_TX/USART1_RTS/TIM1_ETR/COMP2_OUT/TSC_G4_IO4/EVENTOUT
PA13/IR_OUT/SWDIO/USB_NOE
PA14/USART2_TX/SWCLK
PA15/SPI1_NSS/I2S1_WS/USART2_RX/USART4_RTS/TIM2_CH1_ETR/EVENTOUT
PB0/TIM3_CH3/TIM1_CH2N/TSC_G3_IO2/EVENTOUT/USART3_CK
PB1/TIM3_CH4/USART3_RTS/TIM14_CH1/TIM1_CH3N/TSC_G3_IO3
PB2/TSC_G3_IO4
PB3/SPI1_SCK/I2S1_CK/TIM2_CH2/TSC_G5_IO1/EVENTOUT
PB4/SPI1_MISO/I2S1_MCK/TIM17_BKIN/TIM3_CH1/TSC_G5_IO2/EVENTOUT
PB5/SPI1_MOSI/I2S1_SD/I2C1_SMBA/TIM16_BKIN/TIM3_CH2
PB6/I2C1_SCL/USART1_TX/TIM16_CH1N/TSC_G5_I03
PB7/I2C1_SDA/USART1_RX/USART4_CTS/TIM17_CH1N/TSC_G5_IO4
PB8/I2C1_SCL/CEC/TIM16_CH1/TSC_SYNC/CAN_RX
PB9/SPI2_NSS/I2S2_WS/I2C1_SDA/IR_OUT/TIM17_CH1/EVENTOUT/CAN_TX
PB10/SPI2_SCK/I2C2_SCL/USART3_TX/CEC/TSC_SYNC/TIM2_CH3
PB11/USART3_RX/TIM2_CH4/EVENTOUT/TSC_G6_IO1/I2C2_SDA
PB12/TIM1_BKIN/TIM15_BKIN/SPI2_NSS/I2S2_WS/USART3_CK/TSC_G6_IO2/EVENTOUT
PB13/SPI2_SCK/I2S2_CK/I2C2_SCL/USART3_CTS/TIM1_CH1N/TSC_G6_IO3
PB14/SPI2_MISO/I2S2_MCK/I2C2_SDA/USART3_RTS/TIM1_CH2N/TIM15_CH1/TSC_G6_IO4
PB15/SPI2_MOSI/I2S2_SD/TIM1_CH3N/TIM15_CH1N/TIM15_CH2
PC13/WKUP2/RTC_TAMP1/RTC_TS/RTC_OUT
PC14/OSC32_IN
PC15/OSC32_OUT
PF0/CRS_SYNC/OSC_IN
PF1/OSC_OUT
NRST
BOOT0
VSSA
VSS
R9 510R
Debug Header
P3
Header 6
PB7/USART1_RX
PB6/USART1_TX
PA14/SWCLK
PA13/SWDIO
Reset
R4 100K
S1
SW-PB
C15 0.1uF
NRST
Mezzanine Connector
P4
BergStak Receptacle
PC13 <- 3mA Max.
Title
Size
Legal
Number
Revision
Date: 2017-01-15
Sheet of
File: D:\Documents\..\Controller-Board.SchDoc
Drawn By: