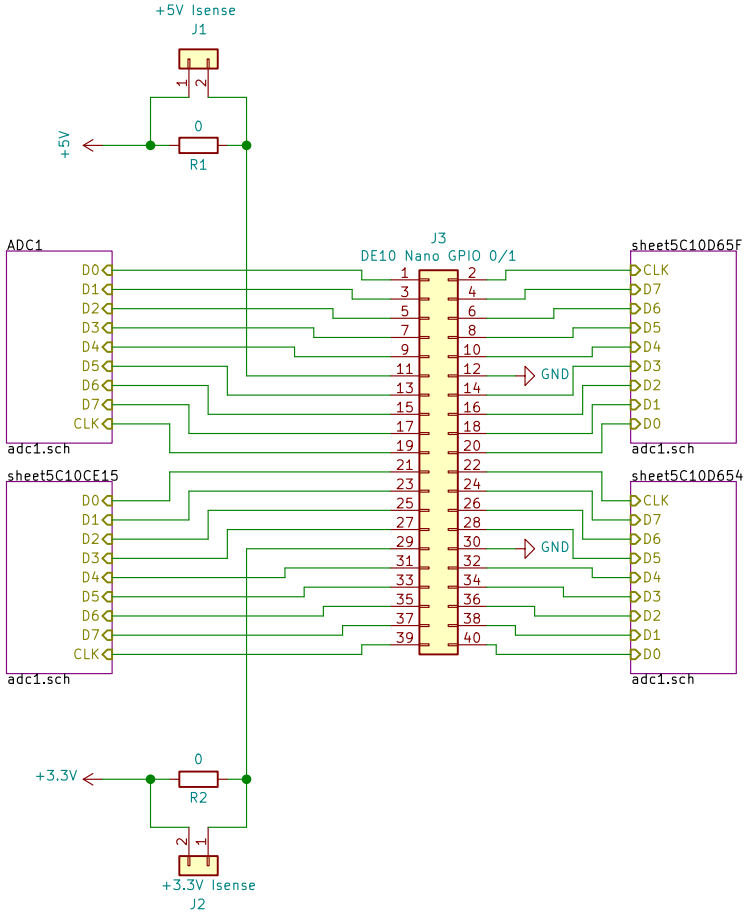

Sheet: /
File: adc.sch

Title:

Size: A4	Date: lun. 30 mars 2015	**Rev:**
KiCad E.D.A. kicad (5.0.1-dev-36-g831978293)		Id: 1/5