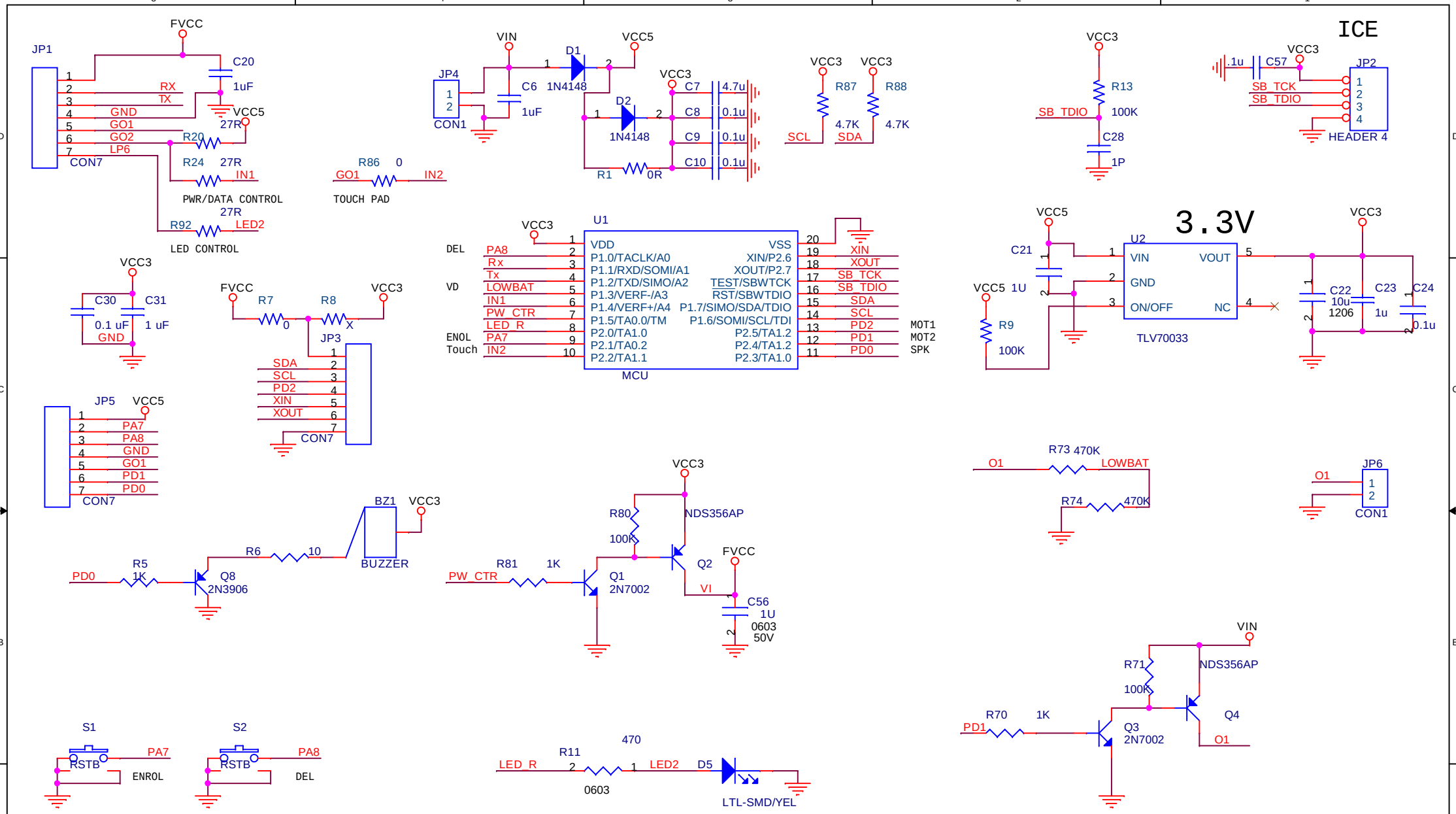

Title	CPU	
Size A4	Document Number MVC_430	Rev 3.2
Date: Wednesday, September 24, 2014	Sheet 1 of 1	