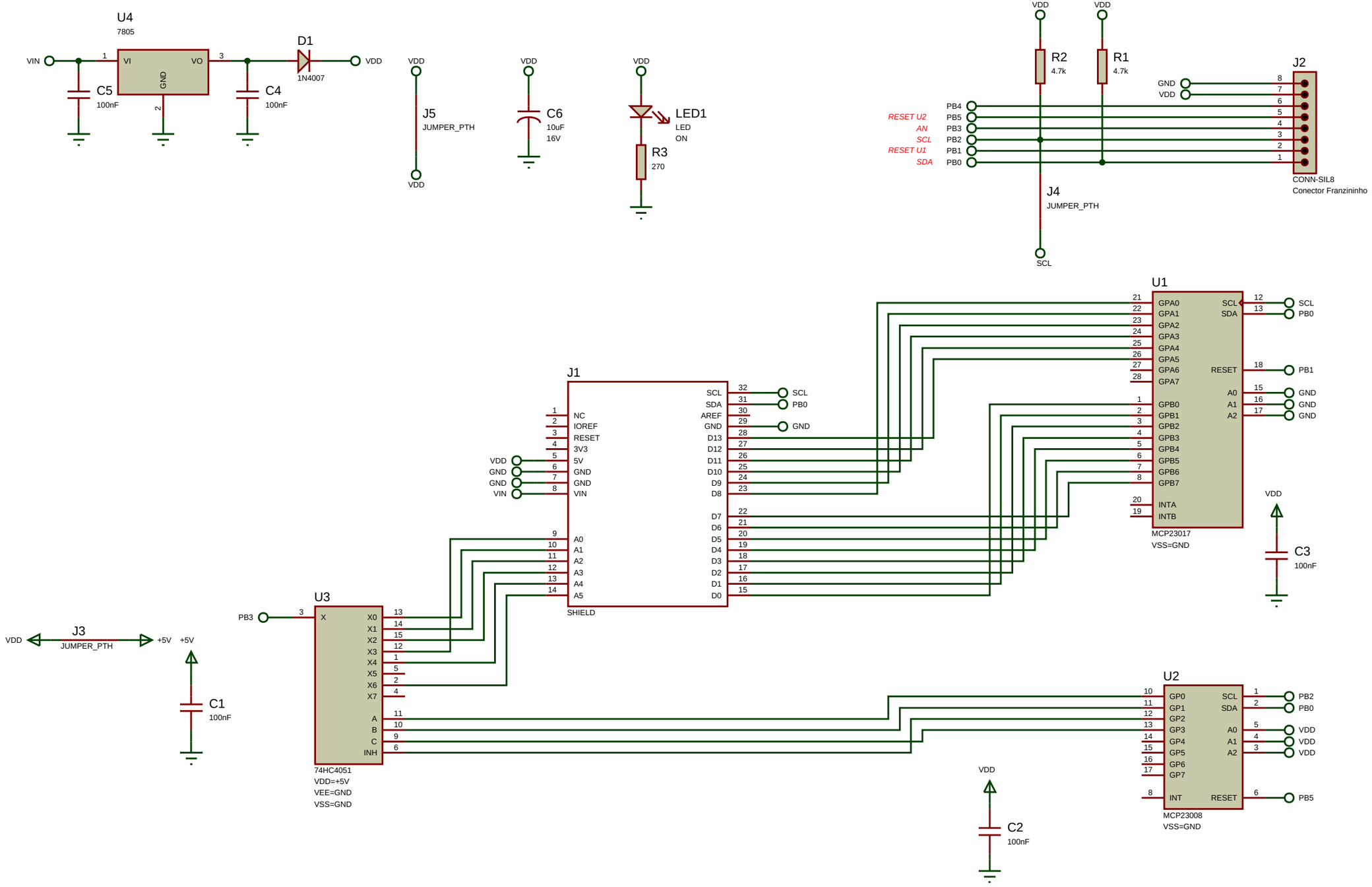

FILE NAME:	franzininho_exp_gpio_single.pdsprj
DESIGN TITLE:	franzininho_exp_gpio_single.pdsprj
PATH:	C:\Users\Evandro\Desktop\frazininho_shield\Projeto Singler Layer\Projeto\fran
BY: @AUTHOR	REV: @REV
DATE:	17/02/2018
PAGE:	1 of 1
TIME:	19:37:39