Parts List				
Item	Qty	Part Number	Description	Material
1	1	XY Motor Bracket		PETG Plastic
2	1	Nema 17 Stepper Motor		Steel
3	3	M3x8 316		Stainless Steel
4	3	M3 Washer 316		Stainless Steel
5	2	M5 Washer 316		Stainless Steel
6	2	M5x10 316		Stainless Steel

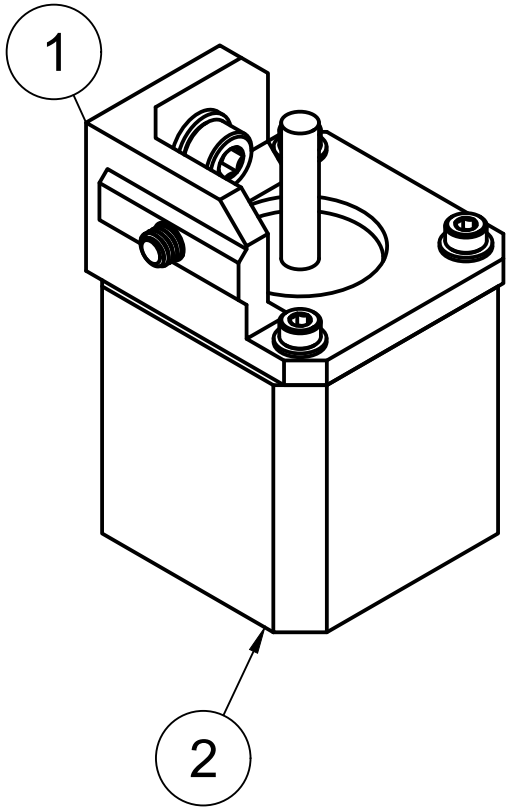

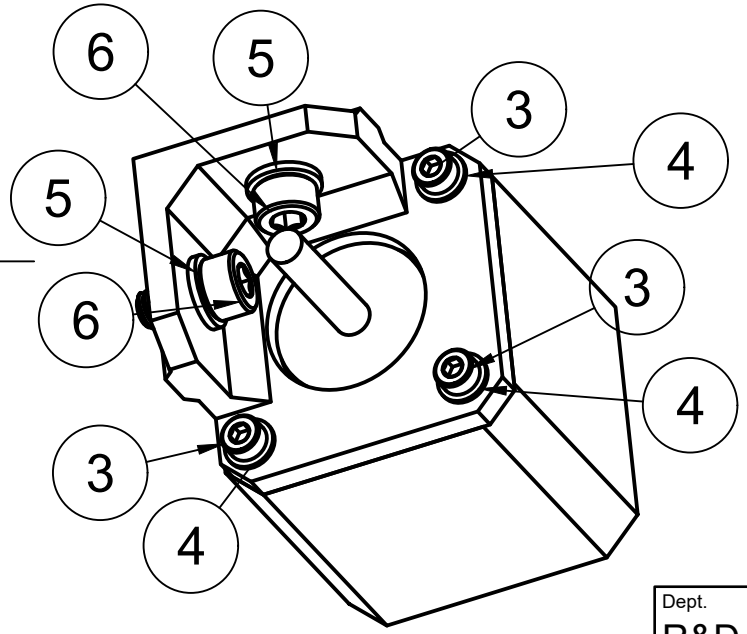

Dept. R&D	Technical reference	Created by Roy Berntsen 03-Mar-18	Approved by RB 2018-03
		Document type Drawing	Document status WIP
		Title XY Motor Unit	DWG No. VK-XY-A-0001
			Rev. 0 / Date of issue 2018-03-03 / Sheet 1/1