左域

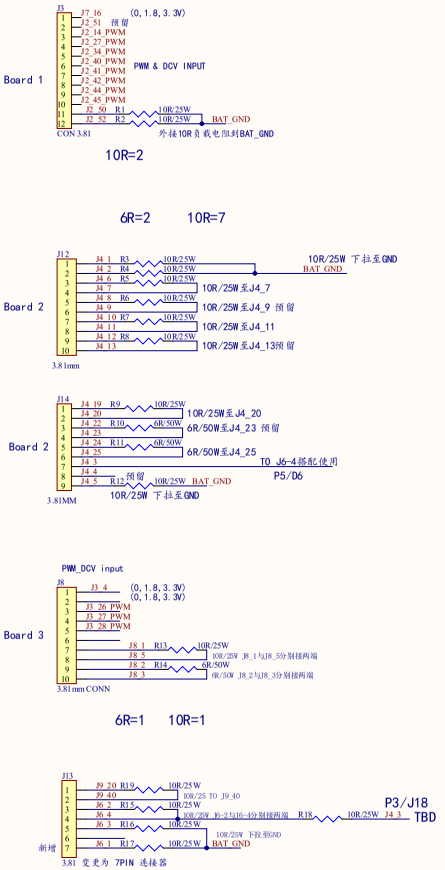

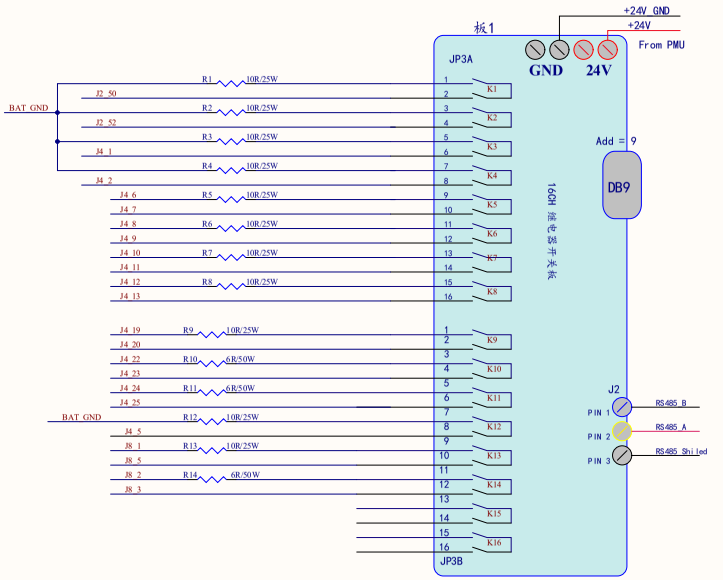

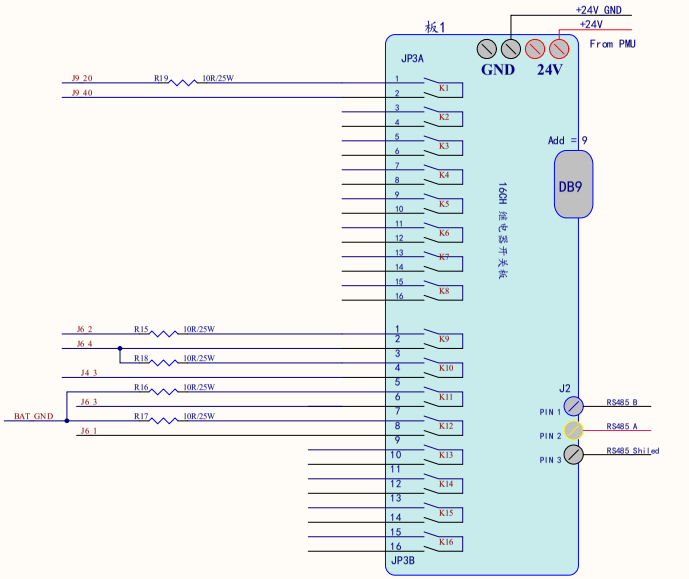

JABIL EMS TD Huangpu	Document Number: 04-TE-42-4015-0PA-A		Rev: A
	Project Name: XP-LRCU-L LoadBox-wiring drawing.PrjPcb		
	Title: PMU		
Drawn By: Jack	Date: 2022-12-5	Checked By: Sky Ma	Date: 2022-12-5
Sheet: 6 Of 6			