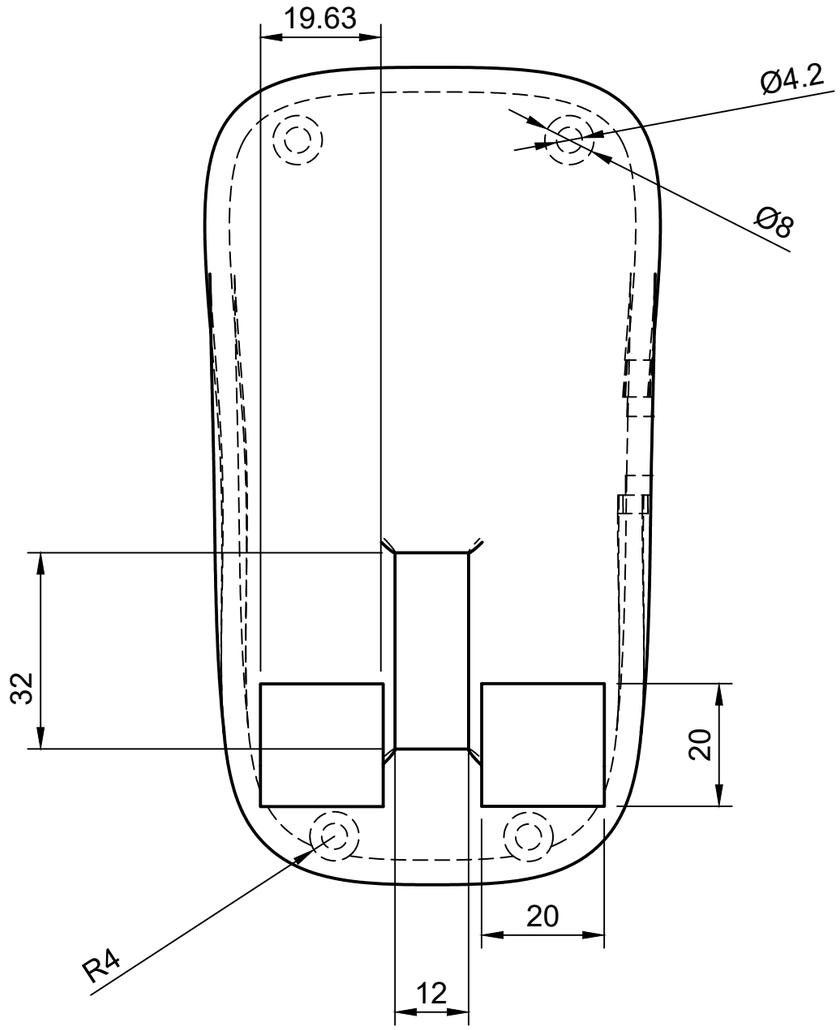

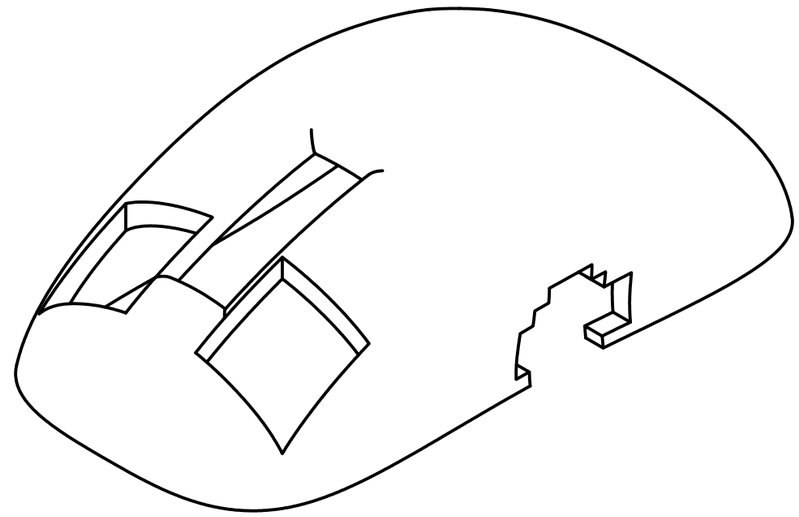

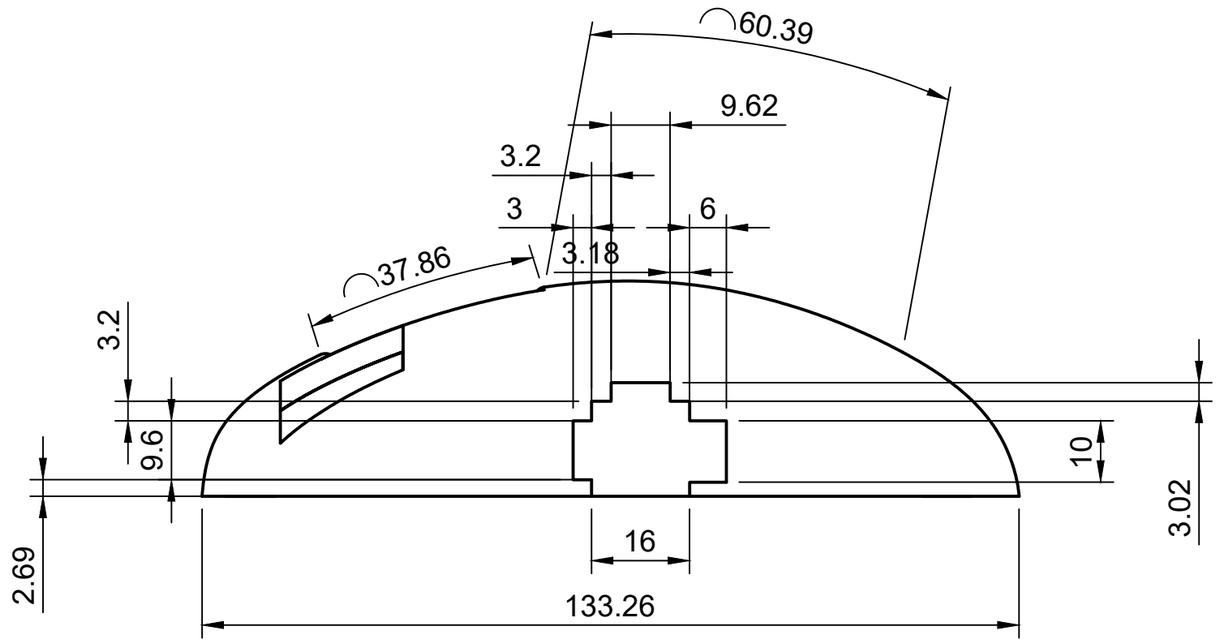

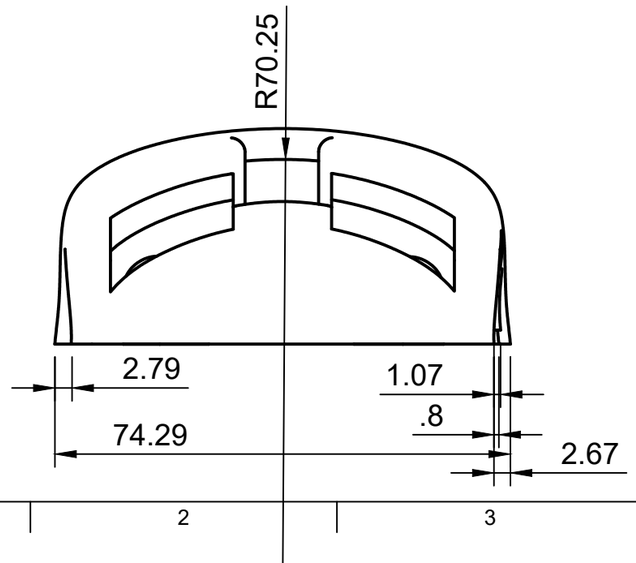

Dept.	Technical reference	Created by James Pham 2022-11-30	Approved by
		Document type	Document status
		Title Top Mouse	DWG No.
			Rev. / Date of issue / Sheet 1/1