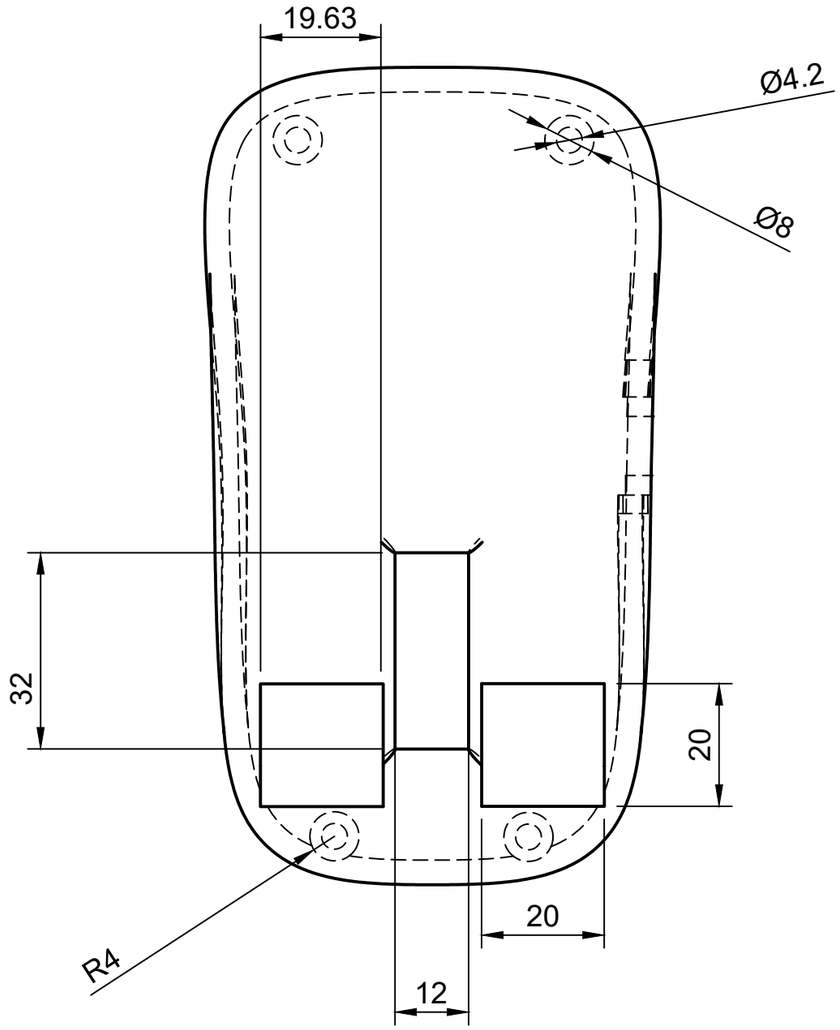

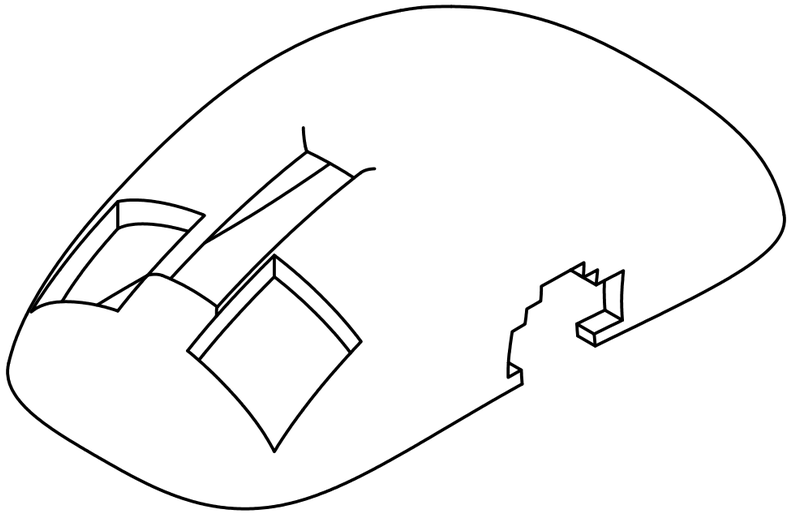

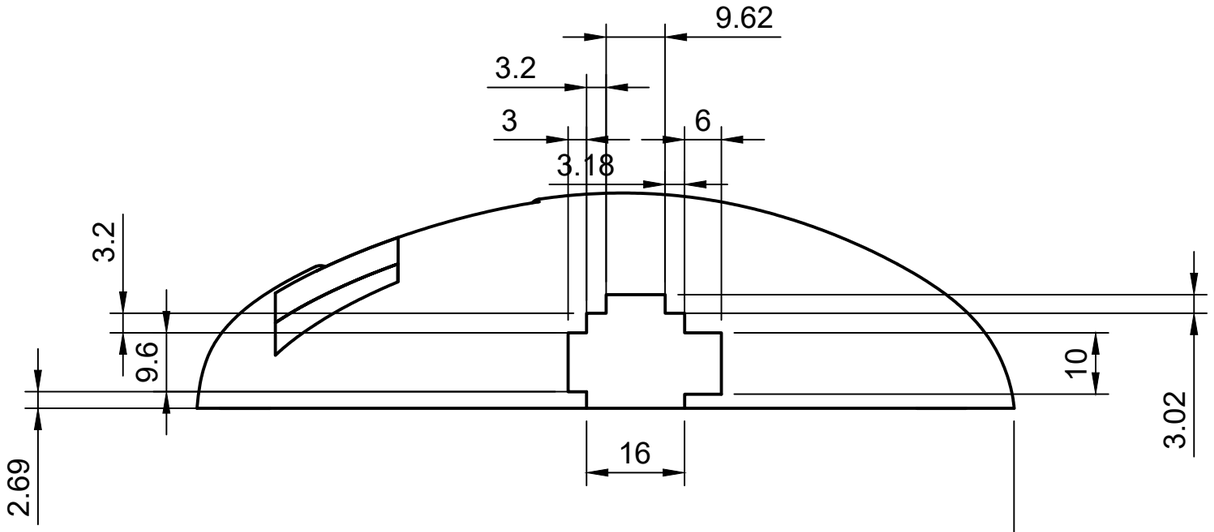

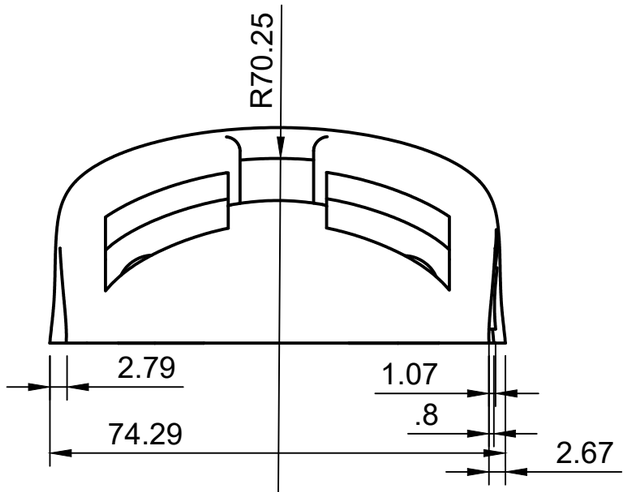

Dept.	Technical reference	Created by James Pham 2022-11-30	Approved by	
		Document type	Document status	
		Title Top Mouse	DWG No.	
			Rev. / Date of issue	Sheet 1/1