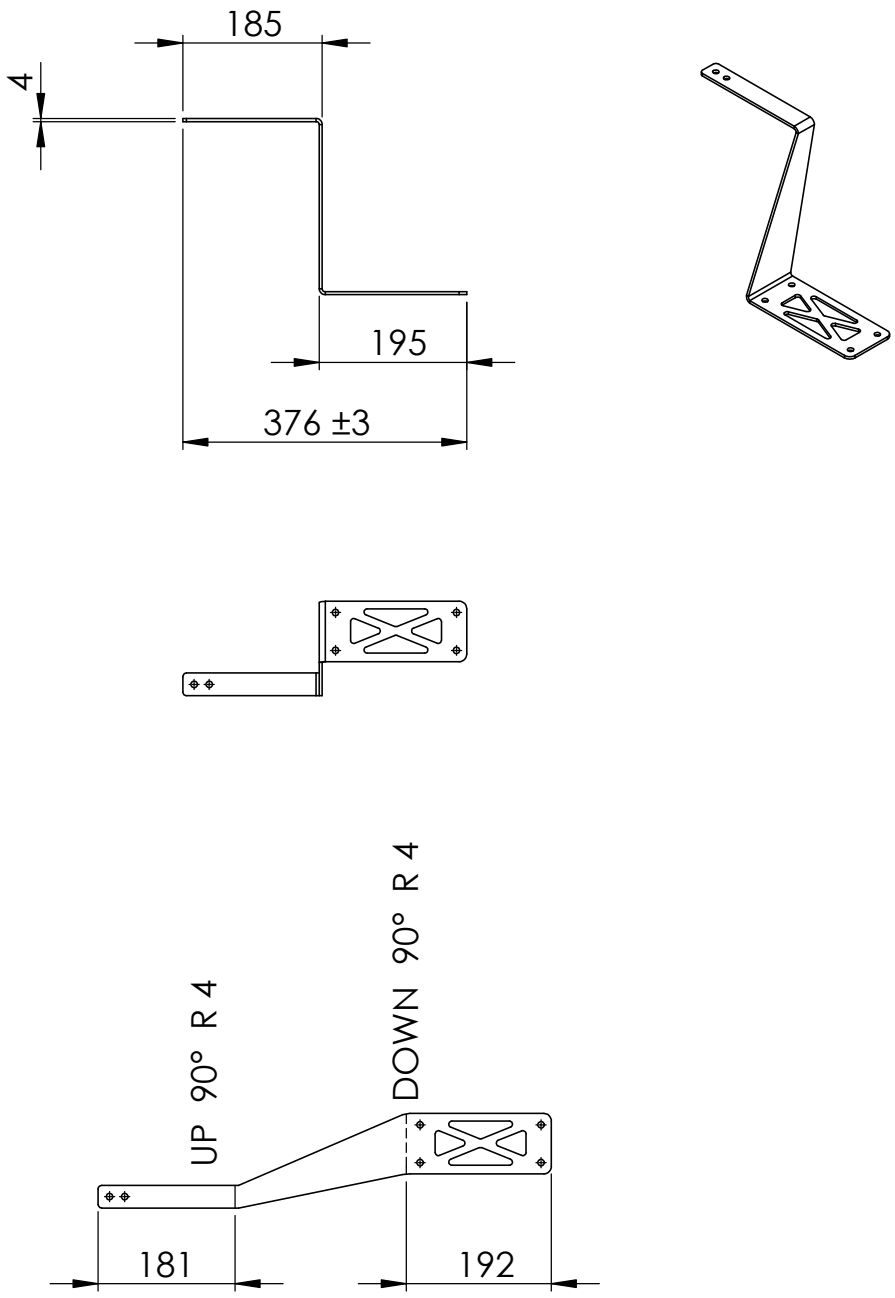

UNLESS OTHERWISE SPECIFIED: DIMENSIONS ARE IN MILLIMETERS SURFACE FINISH: TOLERANCES: LINEAR: ANGULAR:	FINISH:	DEBURR AND BREAK SHARP EDGES	DO NOT SCALE DRAWING — REVISION 00

	NAME	SIGNATURE	DATE
DRAWN			
CHK'D			
APPV'D			
MFG			
Q.A			

TITLE:

Zijplaat rechtsonder

MATERIAL:

WEIGHT:

DWG NO. T00142-0A4-R00

A4

SCALE:1:10

SHEET 1 OF 1

SOLIDWORKS Educational Product. For Instructional Use Only.