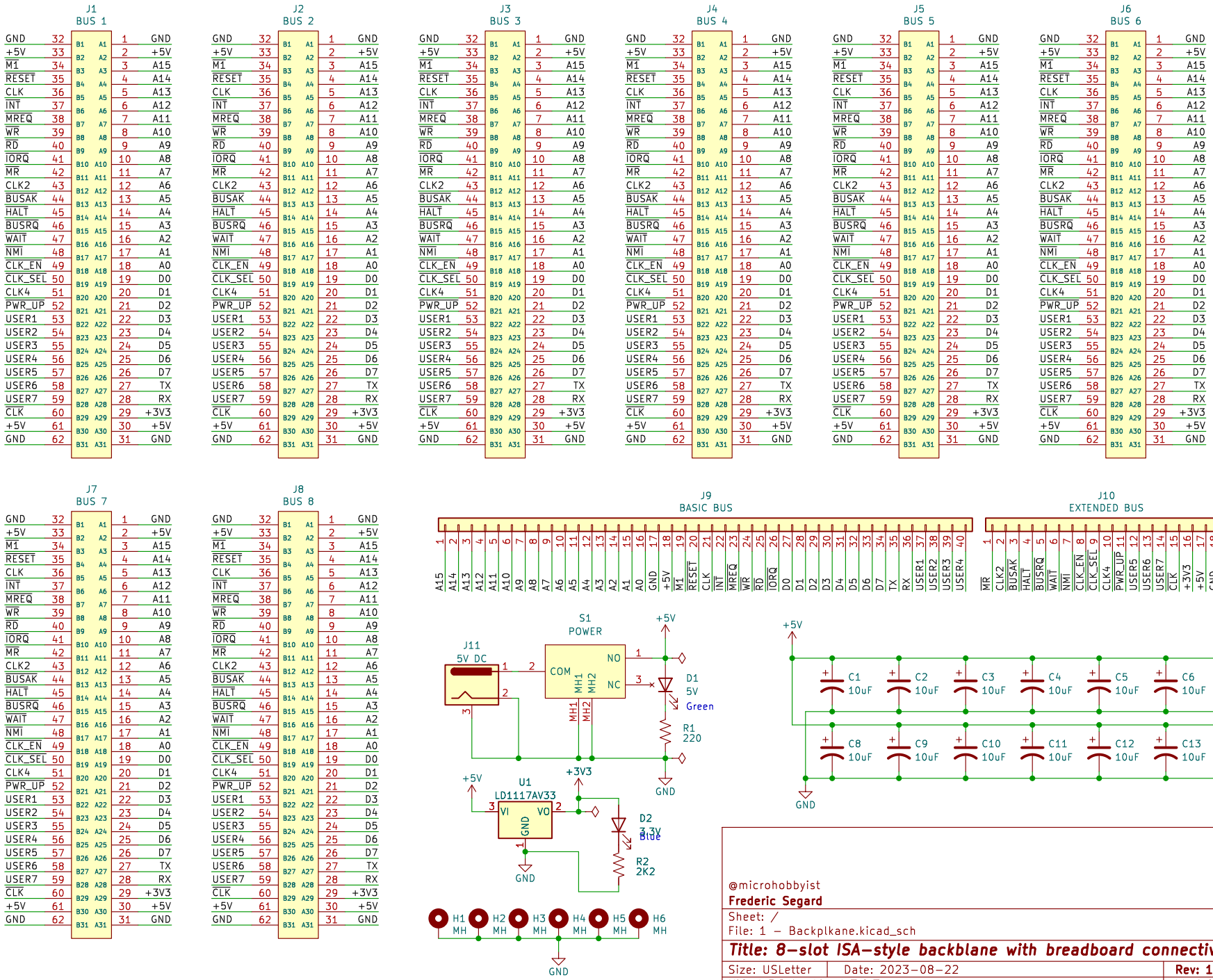

@microhobbyist
Frederic Segard

Sheet: /
File: 1 – Backplkane.kicad_sch

Title: 8-slot ISA-style backblane with breadboard connectivity

Size: USLetter	Date: 2023-08-22	**Rev: 1.1**
KiCad E.D.A. kicad 7.0.7		Id: 1/1