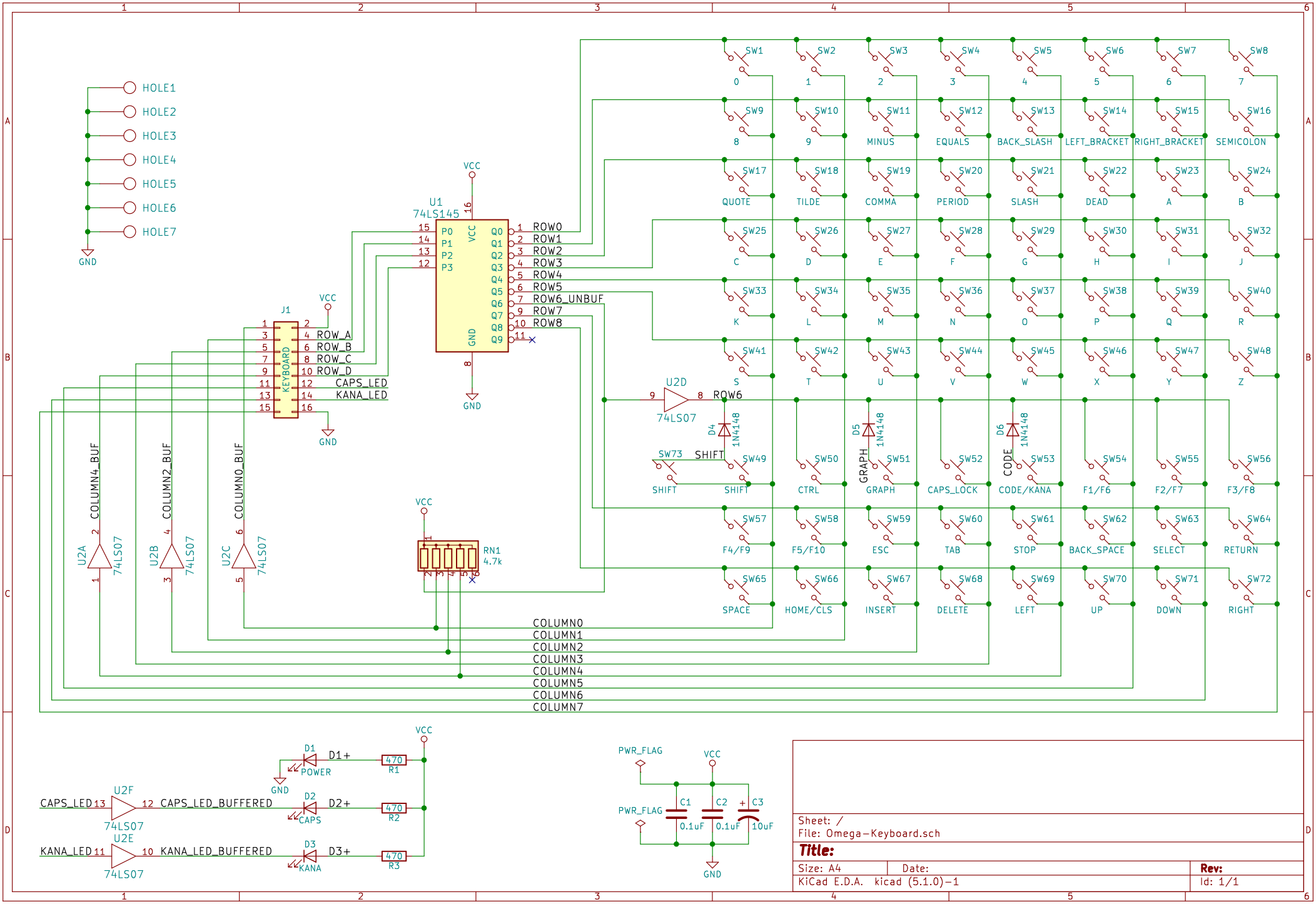
HOLE1
HOLE2
HOLE3
HOLE4
HOLE5
HOLE6
HOLE7
GND
U1
74LS145
VCC
P0
P1
P2
P3
Q0
Q1
Q2
Q3
Q4
Q5
Q6
Q7
Q8
Q9
ROW0
ROW1
ROW2
ROW3
ROW4
ROW5
ROW6_UNBUF
ROW7
ROW8
J1
KEYBOARD
ROW_A
ROW_B
ROW_C
ROW_D
CAPS_LED
KANA_LED
U2D
74LS07
ROW6
D4
1N4148
D5
1N4148
D6
1N4148
SW73
SHIFT
GRAPH
CODE
U2A
U2B
U2C
COLUMN4_BUF
COLUMN2_BUF
COLUMN0_BUF
RN1
4.7k
COLUMN0
COLUMN1
COLUMN2
COLUMN3
COLUMN4
COLUMN5
COLUMN6
COLUMN7
SW1 0
SW2 1
SW3 2
SW4 3
SW5 4
SW6 5
SW7 6
SW8 7
SW9 8
SW10 9
SW11 MINUS
SW12 EQUALS
SW13 BACK_SLASH
SW14 LEFT_BRACKET
SW15 RIGHT_BRACKET
SW16 SEMICOLON
SW17 QUOTE
SW18 TILDE
SW19 COMMA
SW20 PERIOD
SW21 SLASH
SW22 DEAD
SW23 A
SW24 B
SW25 C
SW26 D
SW27 E
SW28 F
SW29 G
SW30 H
SW31 I
SW32 J
SW33 K
SW34 L
SW35 M
SW36 N
SW37 O
SW38 P
SW39 Q
SW40 R
SW41 S
SW42 T
SW43 U
SW44 V
SW45 W
SW46 X
SW47 Y
SW48 Z
SW49 SHIFT
SW50 CTRL
SW51 GRAPH
SW52 CAPS_LOCK
SW53 CODE/KANA
SW54 F1/F6
SW55 F2/F7
SW56 F3/F8
SW57 F4/F9
SW58 F5/F10
SW59 ESC
SW60 TAB
SW61 STOP
SW62 BACK_SPACE
SW63 SELECT
SW64 RETURN
SW65 SPACE
SW66 HOME/CLS
SW67 INSERT
SW68 DELETE
SW69 LEFT
SW70 UP
SW71 DOWN
SW72 RIGHT
D1
POWER
D1+
R1
470
D2
CAPS
D2+
R2
470
D3
KANA
D3+
R3
470
U2F
CAPS_LED
CAPS_LED_BUFFERED
U2E
KANA_LED
KANA_LED_BUFFERED
74LS07
PWR_FLAG
C1
0.1uF
C2
0.1uF
C3
10uF
Sheet: /
File: Omega-Keyboard.sch
Title:
Size: A4
Date:
Rev:
KiCad E.D.A. kicad (5.1.0)-1
Id: 1/1