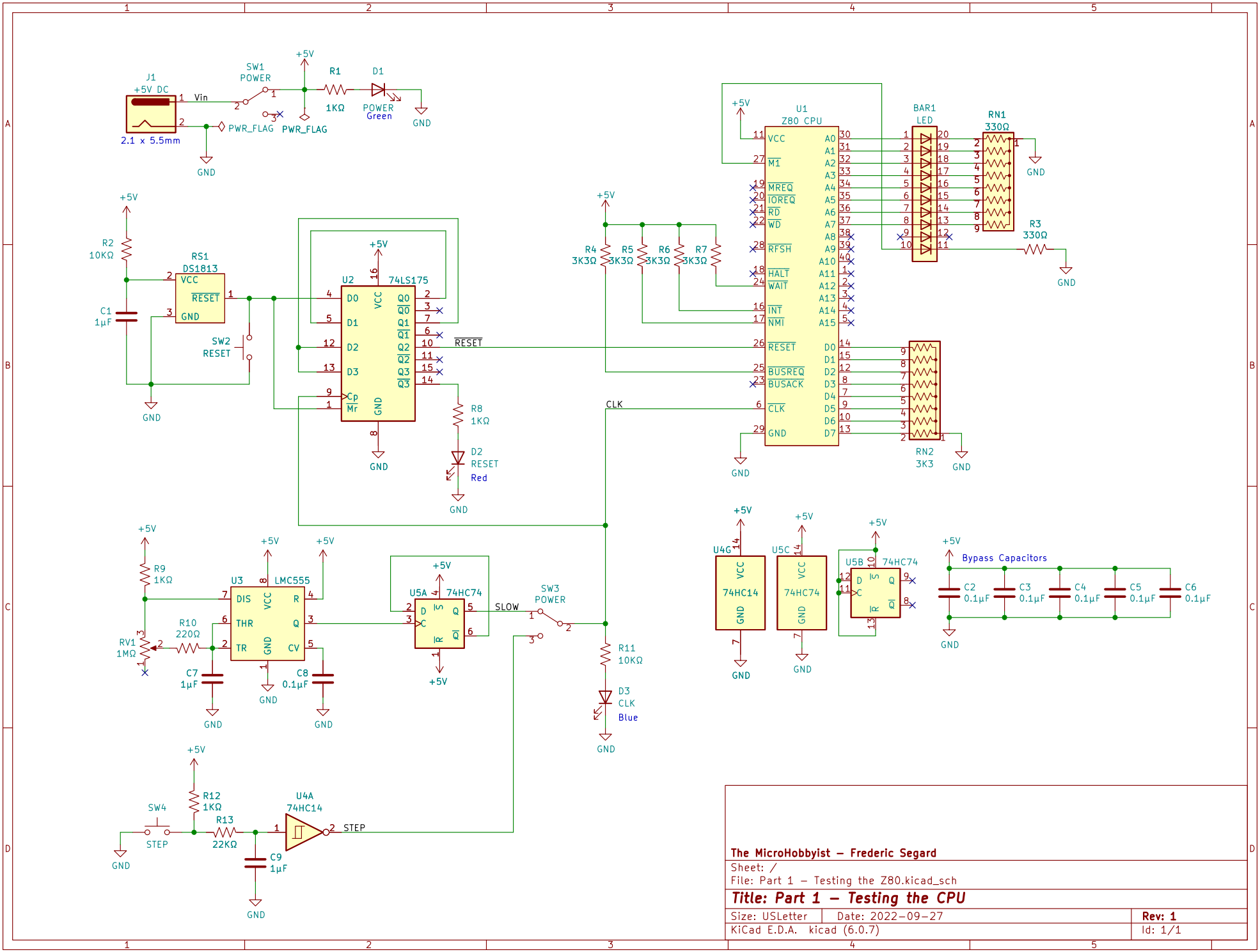

The MicroHobbyist – Frederic Segard

Sheet: /

File: Part 1 – Testing the Z80.kicad_sch

Title: Part 1 – Testing the CPU

Size: USLetter	Date: 2022-09-27	**Rev: 1**
KiCad E.D.A. kicad (6.0.7)		Id: 1/1