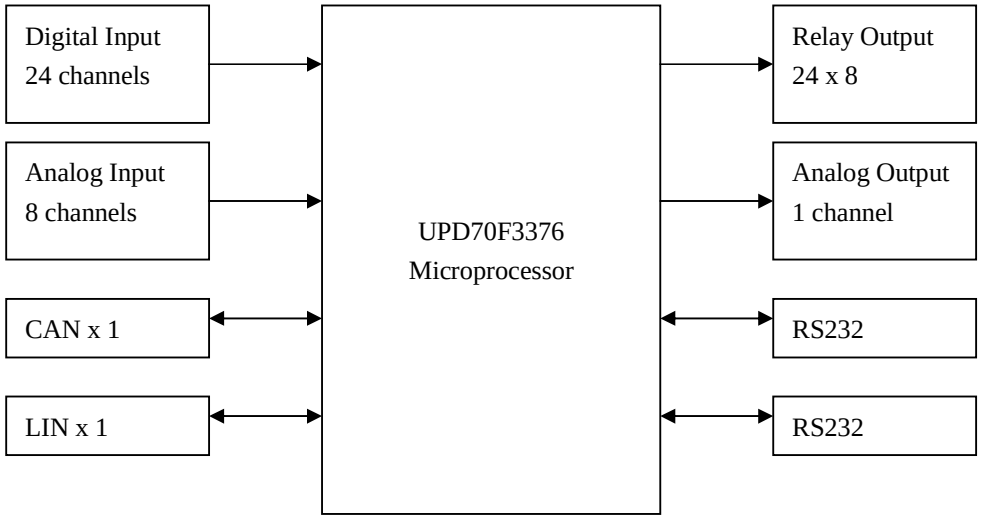
Digital Input
24 channels
Analog Input
8 channels
CAN x 1
LIN x 1
UPD70F3376
Microprocessor
Relay Output
24 x 8
Analog Output
1 channel
RS232
RS232

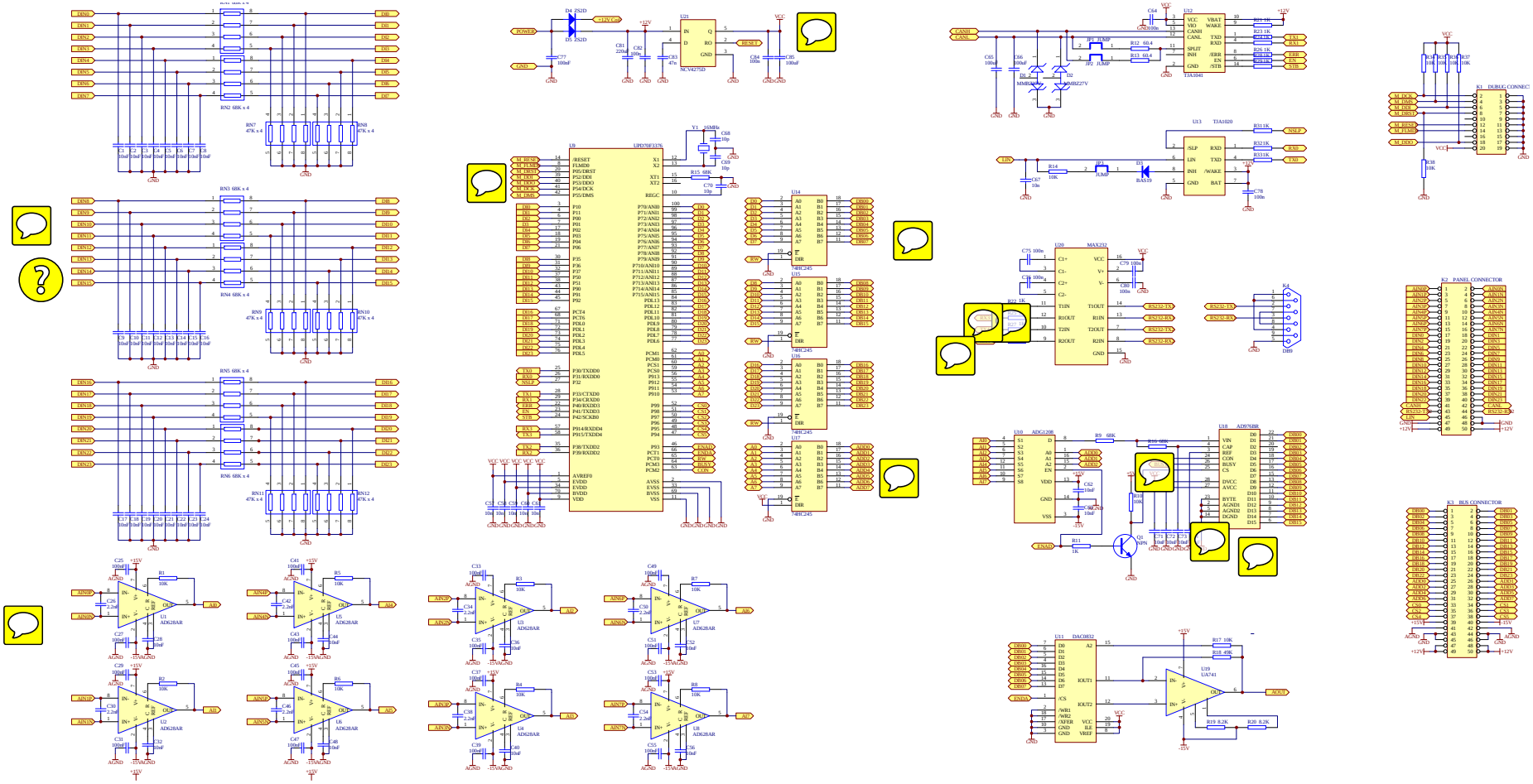
RN2 68K x 4
RN3 68K x 4
RN4 68K x 4
RN5 68K x 4
RN6 68K x 4
RN7 47K x 4
RN8 47K x 4
RN9 47K x 4
RN10 47K x 4
RN11 47K x 4
RN12 47K x 4
U1 AD628AR
U2 AD628AR
U4 AD628AR
U5 AD628AR
U6 AD628AR
U8 AD628AR
D4 2SD2D
D5 2SD2D
U21 NCV4275D
U9 UPD78F3376
U14 74HC245
U15 74HC245
U16 74HC245
U17 74HC245
U12 TJA1041
U13 TJA1020
U20 MAX232
U10 ADG1208
U18 AD976BR
U11 DAC0832
U19 UA741
K1 DUBLE CONNEC
K2 PANEL CONNECTOR
K3 BUS CONNECTOR
K4

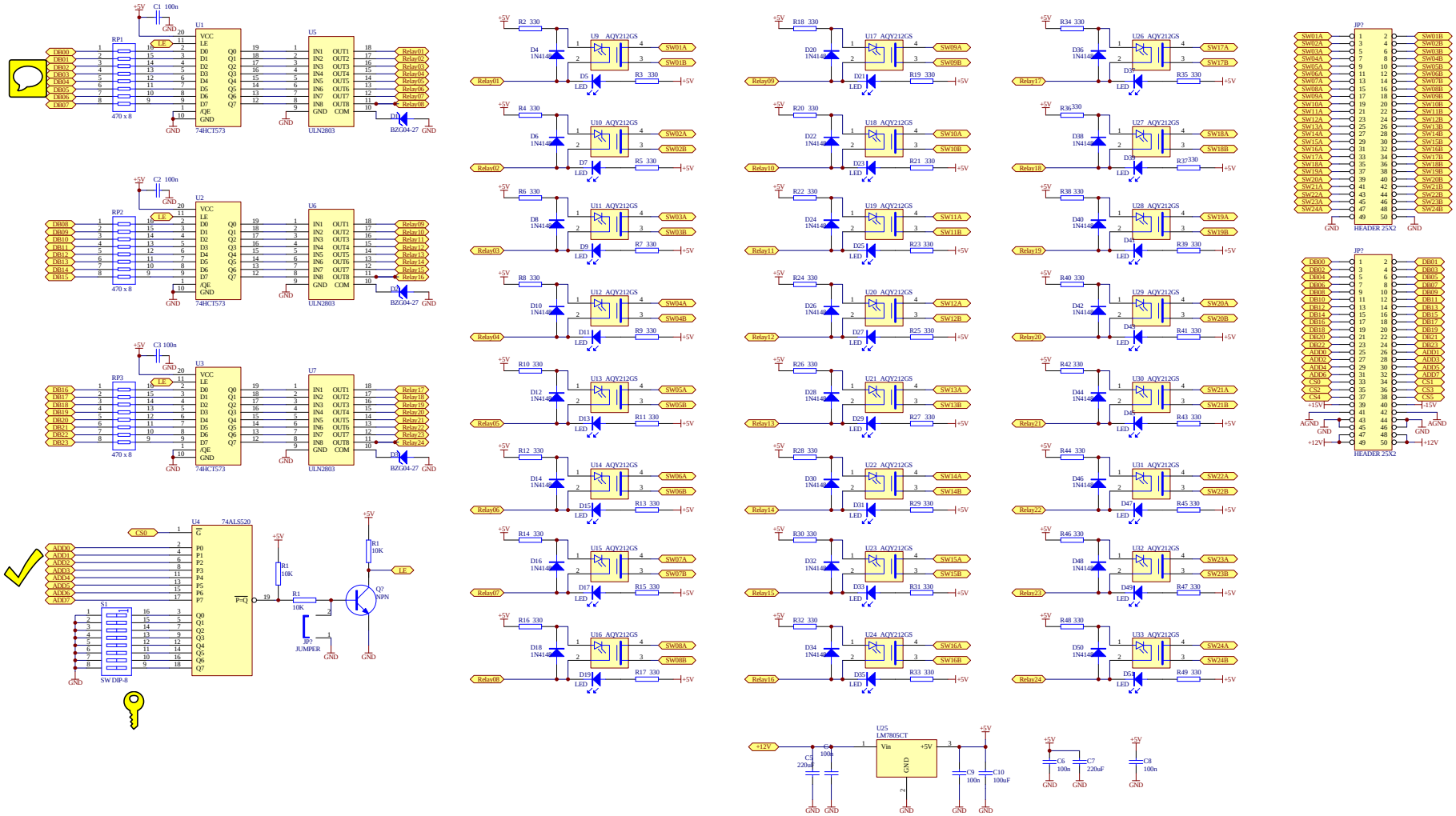
U1 74HCT573
U2 74HCT573
U3 74HCT573
U4 74ALS520
U5 ULN2803
U6 ULN2803
U7 ULN2803
RP1 470 x 8
RP2 470 x 8
RP3 470 x 8
S1 SW DIP-8
JP? JUMPER
Q7 NPN
U9 AQY212GS
U10 AQY212GS
U11 AQY212GS
U12 AQY212GS
U13 AQY212GS
U14 AQY212GS
U15 AQY212GS
U16 AQY212GS
U17 AQY212GS
U18 AQY212GS
U19 AQY212GS
U20 AQY212GS
U21 AQY212GS
U22 AQY212GS
U23 AQY212GS
U24 AQY212GS
U25 LM7805CT
U26 AQY212GS
U27 AQY212GS
U28 AQY212GS
U29 AQY212GS
U30 AQY212GS
U31 AQY212GS
U32 AQY212GS
U33 AQY212GS
JP? HEADER 25X2
JP? HEADER 25X2

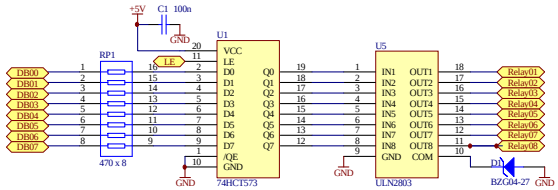
+5V
C1 100n
GND
U1
RP1
470 x 8
LE
VCC
LE
D0
D1
D2
D3
D4
D5
D6
D7
/OE
GND
Q0
Q1
Q2
Q3
Q4
Q5
Q6
Q7
74HCT573
U5
ULN2803
IN1
IN2
IN3
IN4
IN5
IN6
IN7
IN8
GND
OUT1
OUT2
OUT3
OUT4
OUT5
OUT6
OUT7
OUT8
COM
D3
BZG04-27
DB00
DB01
DB02
DB03
DB04
DB05
DB06
DB07
Relay01
Relay02
Relay03
Relay04
Relay05
Relay06
Relay07
Relay08

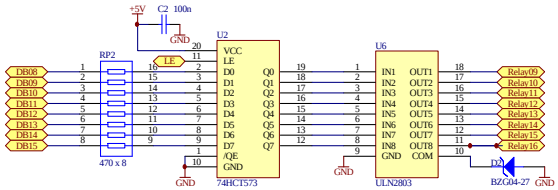
+5V
C2 100n
GND
U2
RP2
470 x 8
LE
VCC
LE
D0
D1
D2
D3
D4
D5
D6
D7
/OE
GND
Q0
Q1
Q2
Q3
Q4
Q5
Q6
Q7
74HCT573
U6
ULN2803
IN1
IN2
IN3
IN4
IN5
IN6
IN7
IN8
GND
OUT1
OUT2
OUT3
OUT4
OUT5
OUT6
OUT7
OUT8
COM
D3
BZG04-27
DB08
DB09
DB10
DB11
DB12
DB13
DB14
DB15
Relay09
Relay10
Relay11
Relay12
Relay13
Relay14
Relay15
Relay16

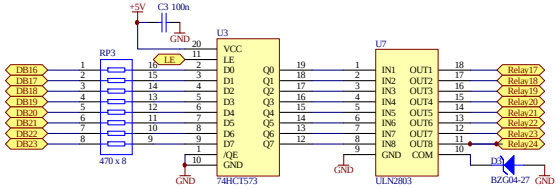
+5V
C3 100n
GND
U3
RP3
470 x 8
LE
VCC
LE
D0
D1
D2
D3
D4
D5
D6
D7
/OE
GND
Q0
Q1
Q2
Q3
Q4
Q5
Q6
Q7
74HCT573
U7
ULN2803
IN1
IN2
IN3
IN4
IN5
IN6
IN7
IN8
GND
OUT1
OUT2
OUT3
OUT4
OUT5
OUT6
OUT7
OUT8
COM
D3
BZG04-27
DB16
DB17
DB18
DB19
DB20
DB21
DB22
DB23
Relay17
Relay18
Relay19
Relay20
Relay21
Relay22
Relay23
Relay24

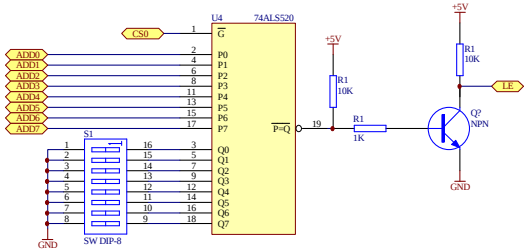
CS0
U4
74ALS520
G
ADD0
ADD1
ADD2
ADD3
ADD4
ADD5
ADD6
ADD7
P0
P1
P2
P3
P4
P5
P6
P7
P=Q
Q0
Q1
Q2
Q3
Q4
Q5
Q6
Q7
S1
SW DIP-8
+5V
R1
10K
R1
1K
Q2
NPN
LE
GND

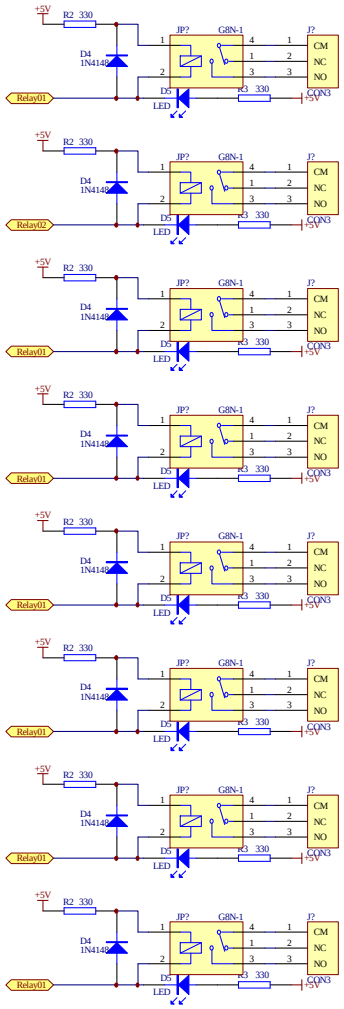
+5V
R2 330
D4
1N4148
JP?
G8N-1
J?
CM
NC
NO
D5
LED
R3 330
CON3
Relay01
Relay02

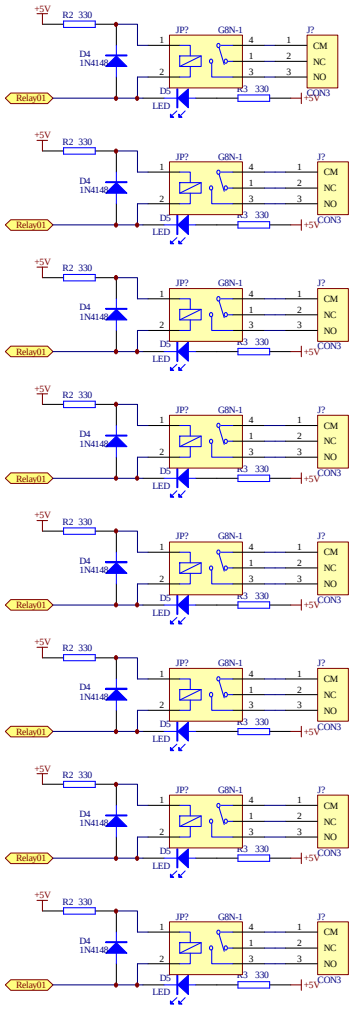
+5V
R2 330
D4
1N4148
JP?
G8N-1
J?
CM
NC
NO
D5
LED
R3 330
CON3
Relay01

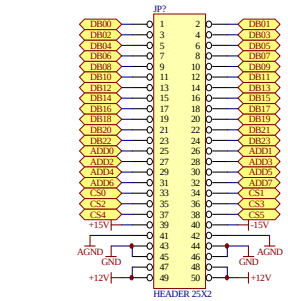
JP?
DB00
DB02
DB04
DB06
DB08
DB10
DB12
DB14
DB16
DB18
DB20
DB22
ADD0
ADD2
ADD4
ADD6
CS0
CS2
CS4
+15V
AGND
GND
+12V
DB01
DB03
DB05
DB07
DB09
DB11
DB13
DB15
DB17
DB19
DB21
DB23
ADD1
ADD3
ADD5
ADD7
CS1
CS3
CS5
-15V
HEADER 25X2

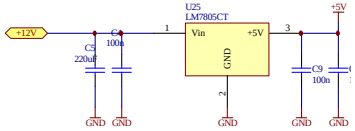
+12V
C4
100n
C5
220uF
U25
LM7805CT
Vin
+5V
GND
C9
100n
GND

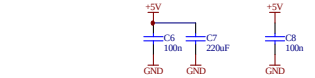
+5V
C6
100n
C7
220uF
C8
100n
GND

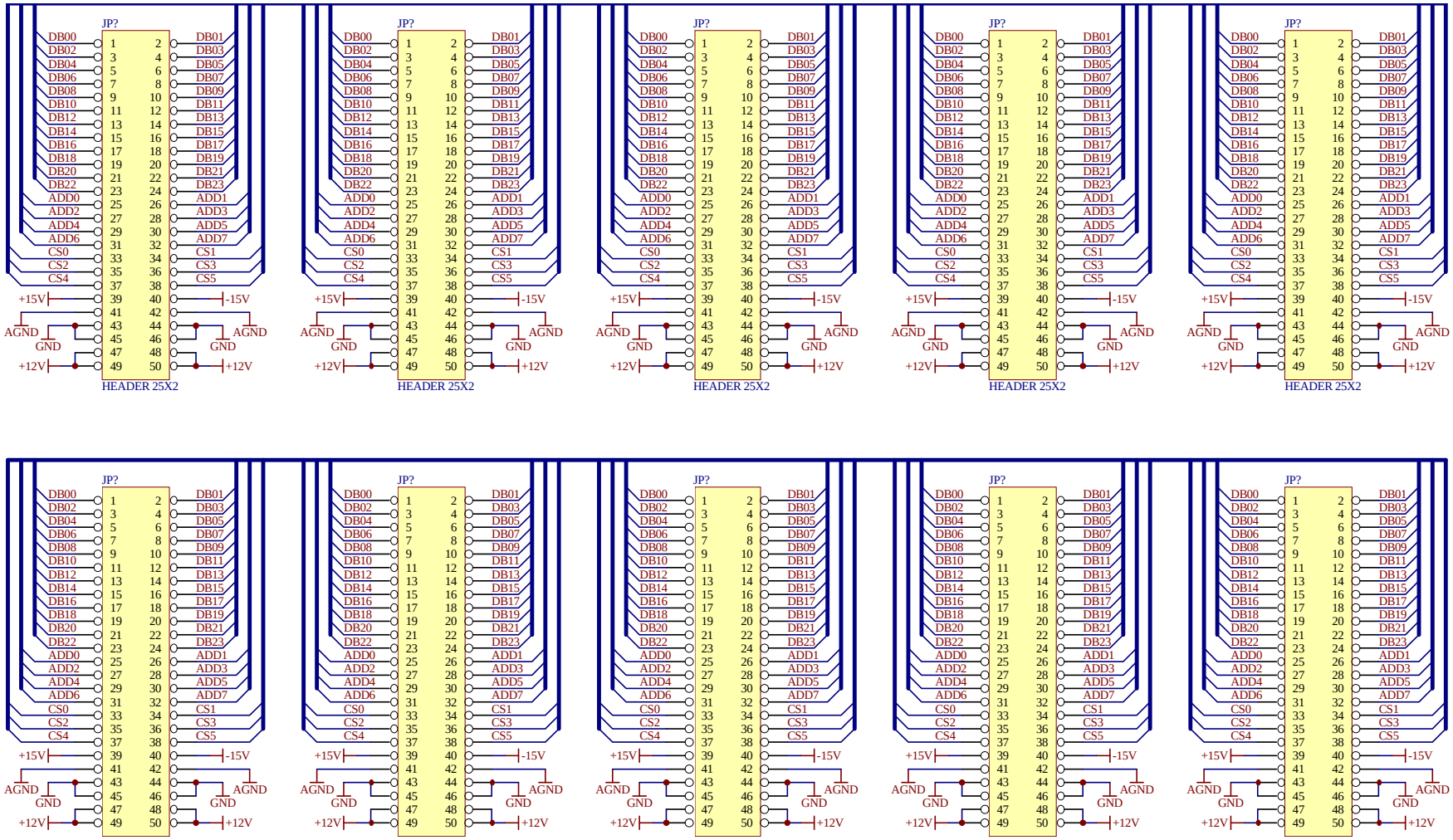
JP?
DB00 DB01 DB02 DB03 DB04 DB05 DB06 DB07 DB08 DB09 DB10 DB11 DB12 DB13 DB14 DB15 DB16 DB17 DB18 DB19 DB20 DB21 DB22 DB23
ADD0 ADD1 ADD2 ADD3 ADD4 ADD5 ADD6 ADD7
CS0 CS1 CS2 CS3 CS4 CS5
+15V -15V
AGND AGND
GND GND
+12V +12V
HEADER 25X2