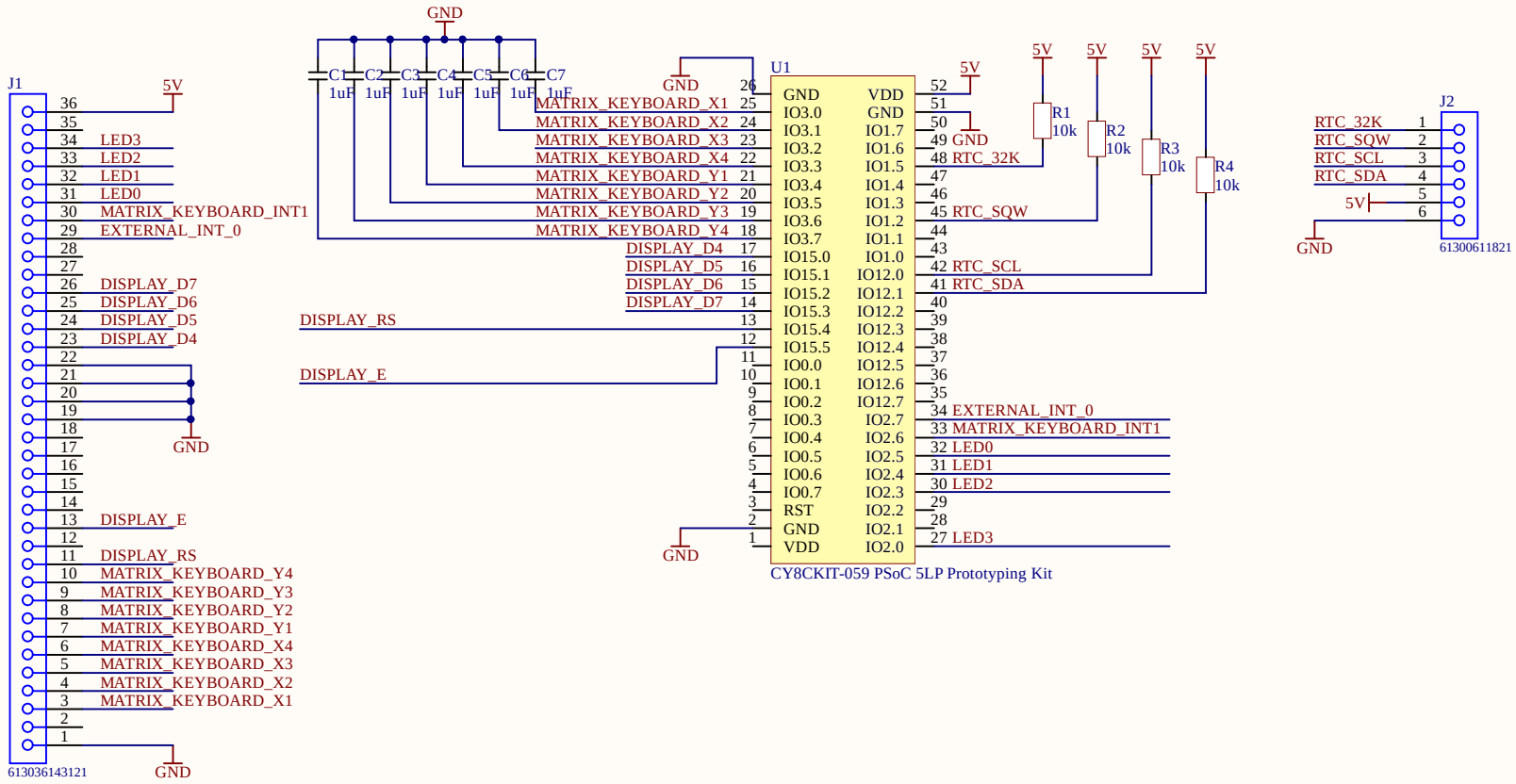

CY8CKIT-059 PSoC 5LP Prototyping Kit

Title		
Size A4	Number	Revision
Date: 17-11-2021	Sheet of	
File: D:\Users\..\main.SchDoc	Drawn By:	