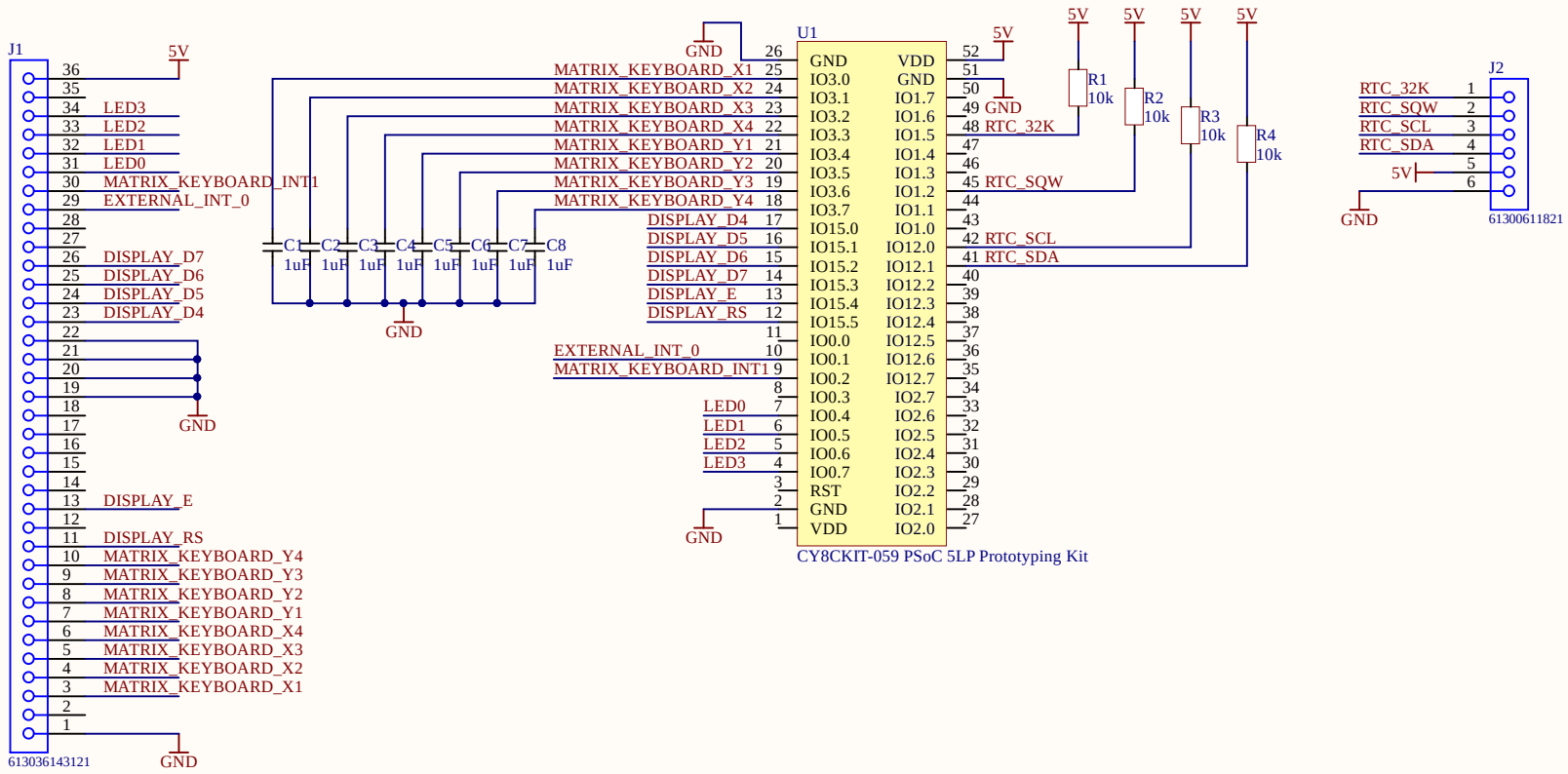

Title		
Size A4	Number	Revision
Date: 20-12-2021	Sheet of	
File: D:\Users\..\main.SchDoc	Drawn By:	

EmbeddedControl_Hardware
Version: 2
Gerjan Mollema
&
Fredrik-Otto Lautenbag
U1
J1
J2
R1
R2
R3
R4
C1
C2
C3
C4
C5
C6
C7
C8