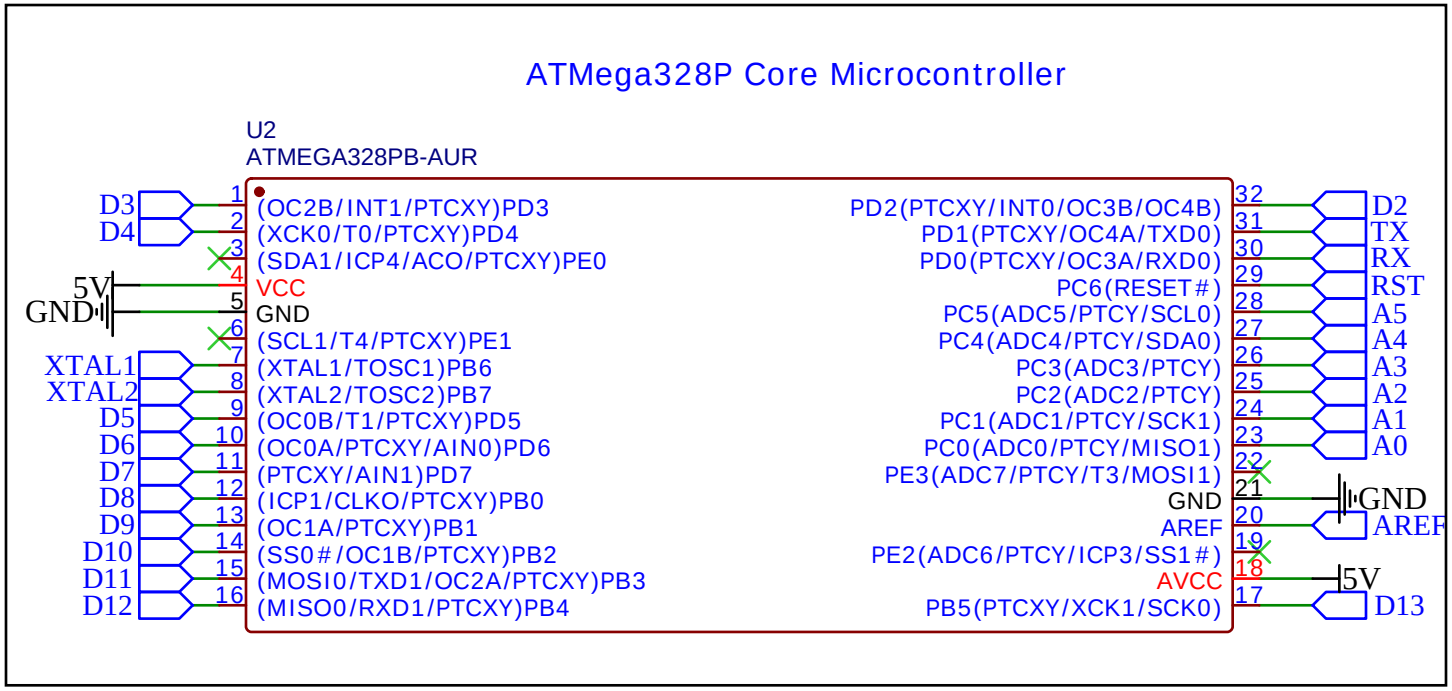

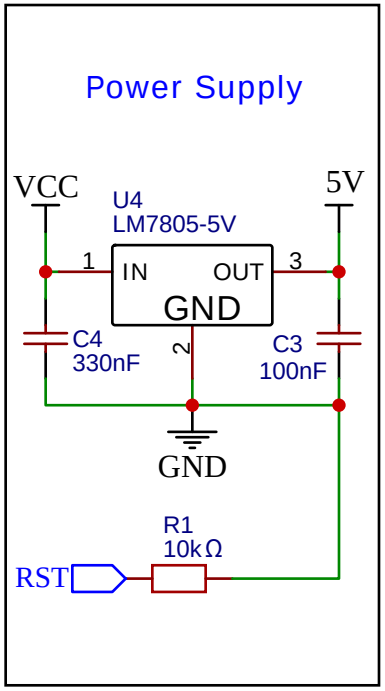

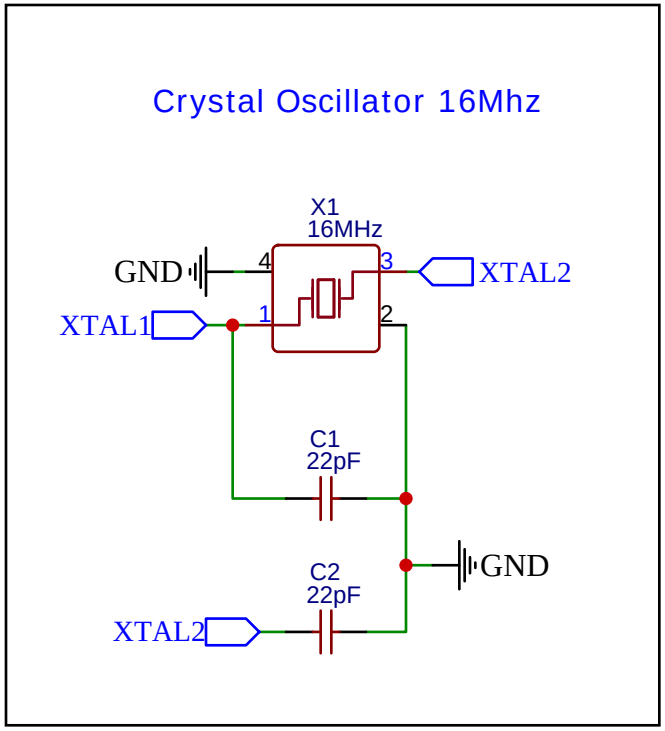

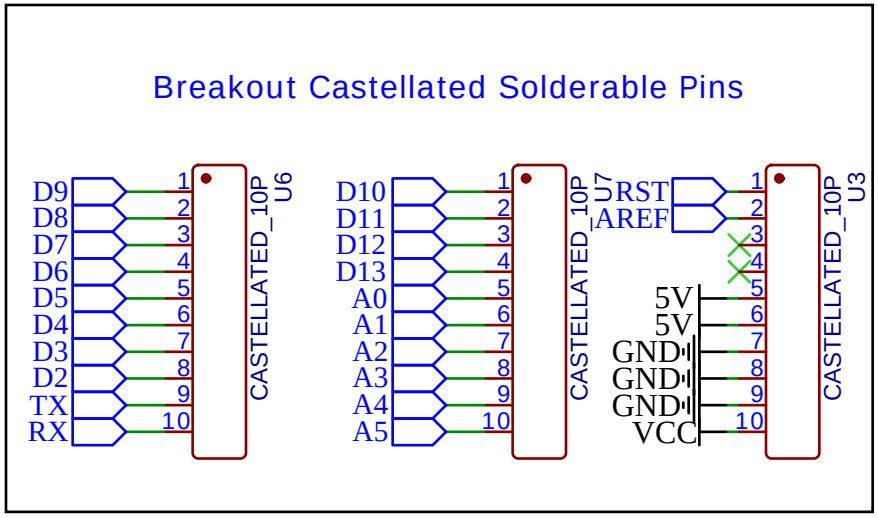

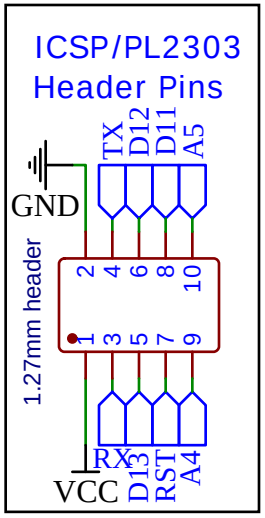

TITLE: FreeMCB328P		REV: 1.0
FreeMCB	Company: FreeMCB	Sheet: 1/1
	Date: 2023-08-15 Drawn By: Nathanne Isip	