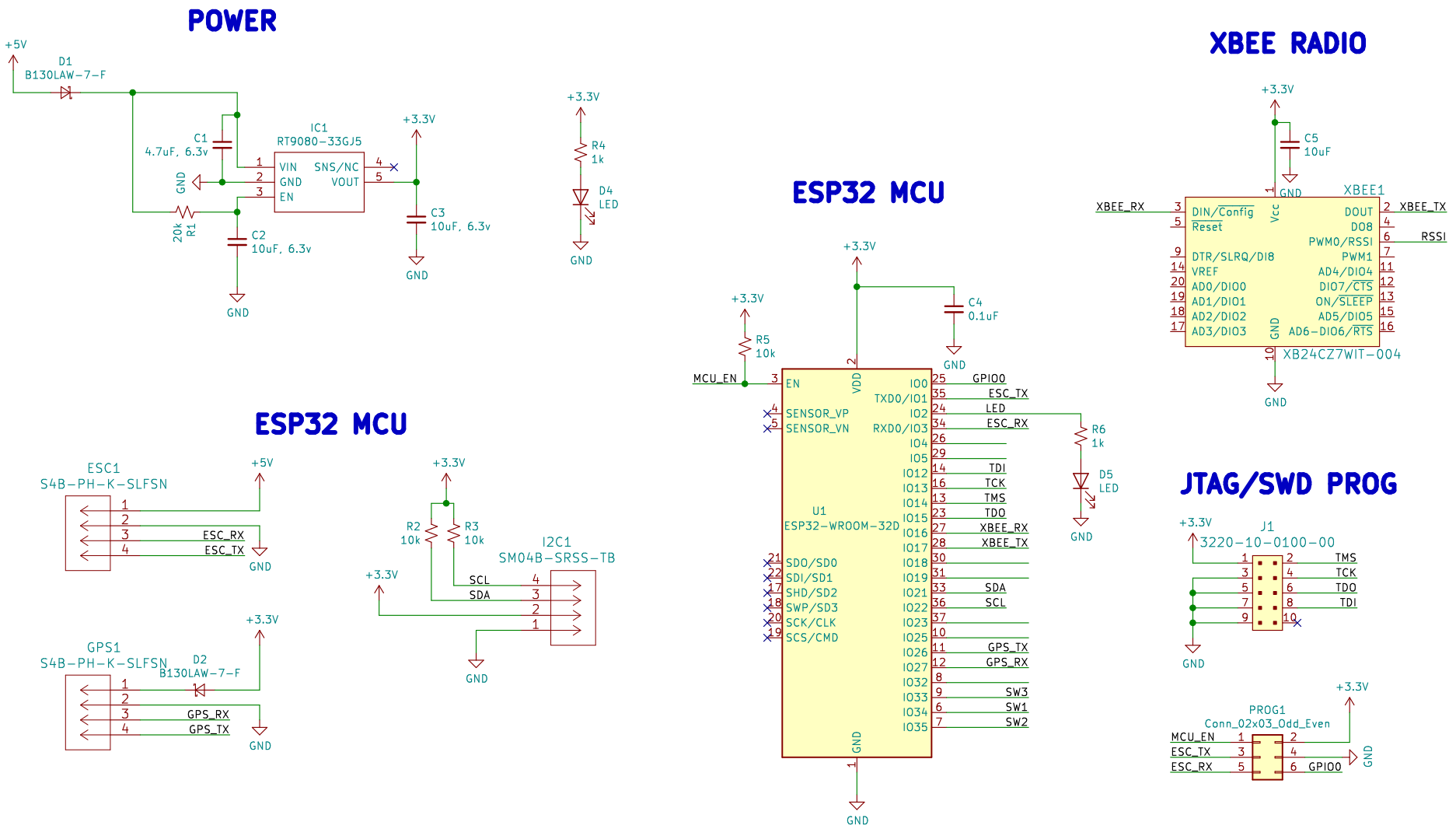

(c) Copyright 2021 FreeSK8 Foundation
Licensed under CERN-OHL-S V2.0
https://ohwr.org/cern_ohl_s_v2.txt

Author: Andrew Dresner
Derelict Robot Industries

Sheet: /
File: Core-Lite.sch

Title: FreeSK8 Receiver

Size: A4	Date: 2021-07-13	**Rev: 1.1**
KiCad E.D.A. eeschema (5.1.5)-3		Id: 1/1