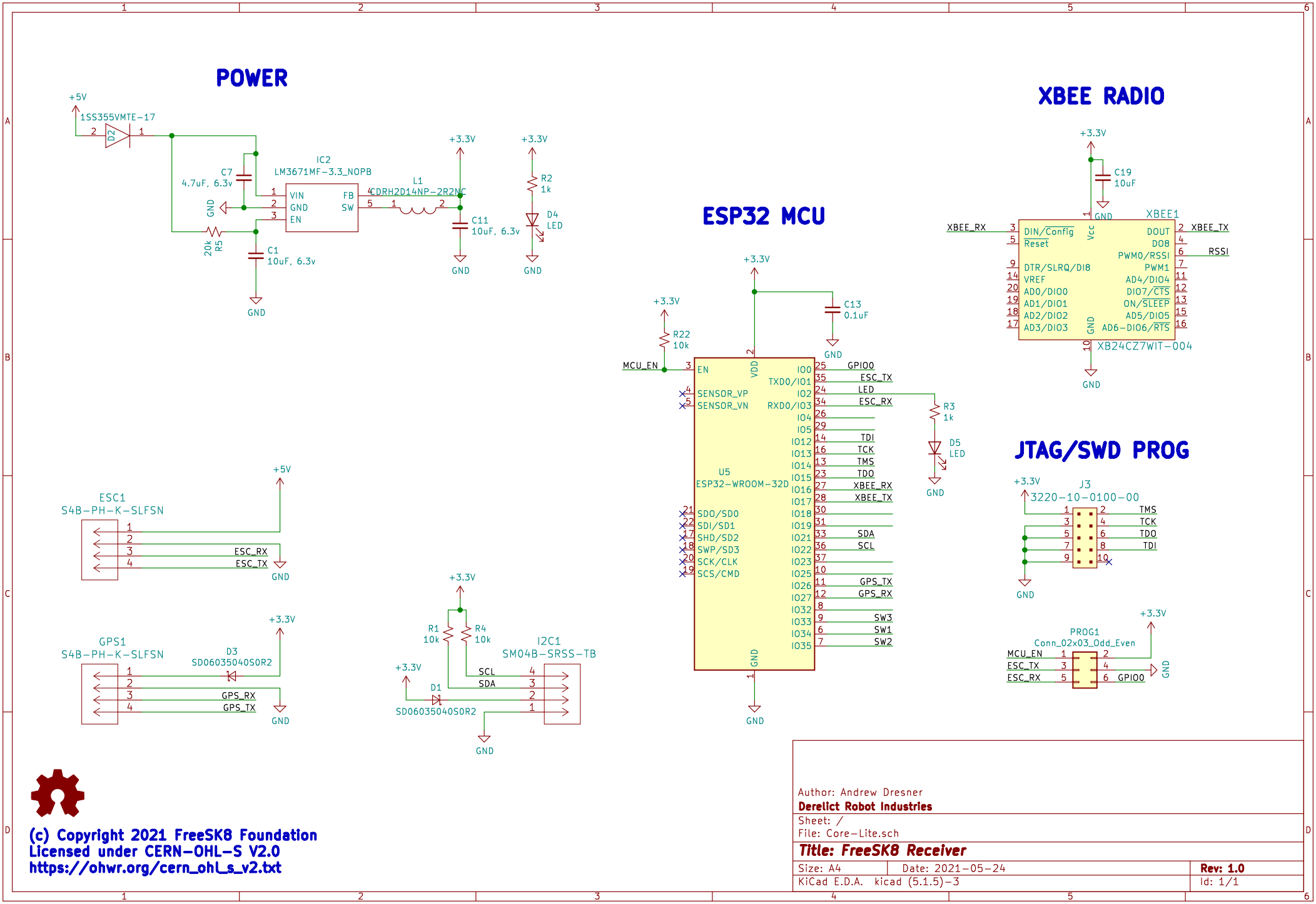
POWER
+5V
1SS355VMTE-17
D2
C7
4.7uF, 6.3v
GND
20k
R5
IC2
LM3671MF-3.3_NOPB
VIN
GND
EN
FB
SW
C1
10uF, 6.3v
GND
L1
CDRH2D14NP-2R2NC
+3.3V
C11
10uF, 6.3v
GND
R2
1k
D4
LED
GND
ESP32 MCU
+3.3V
C13
0.1uF
GND
R22
10k
MCU_EN
EN
VDD
SENSOR_VP
SENSOR_VN
U5
ESP32-WROOM-32D
SDO/SD0
SDI/SD1
SHD/SD2
SWP/SD3
SCK/CLK
SCS/CMD
GND
GPIO0
ESC_TX
LED
ESC_RX
TDI
TCK
TMS
TDO
XBEE_RX
XBEE_TX
SDA
SCL
GPS_TX
GPS_RX
SW3
SW1
SW2
R3
1k
D5
LED
GND
XBEE RADIO
+3.3V
C19
10uF
GND
XBEE1
XBEE_RX
DIN/Config
Reset
Vcc
DOUT
DO8
PWM0/RSSI
PWM1
AD4/DIO4
DIO7/CTS
ON/SLEEP
AD5/DIO5
AD6-DIO6/RTS
DTR/SLRQ/DI8
VREF
AD0/DIO0
AD1/DIO1
AD2/DIO2
AD3/DIO3
XBEE_TX
RSSI
XB24CZ7WIT-004
GND
JTAG/SWD PROG
+3.3V
J3
3220-10-0100-00
TMS
TCK
TDO
TDI
GND
+3.3V
PROG1
Conn_02x03_Odd_Even
MCU_EN
ESC_TX
ESC_RX
GPIO0
GND
ESC1
S4B-PH-K-SLFSN
+5V
ESC_RX
ESC_TX
GND
GPS1
S4B-PH-K-SLFSN
+3.3V
D3
SD06035040S0R2
GPS_RX
GPS_TX
GND
+3.3V
R1
10k
R4
10k
I2C1
SM04B-SRSS-TB
SCL
SDA
+3.3V
D1
SD06035040S0R2
GND
(c) Copyright 2021 FreeSK8 Foundation
Licensed under CERN-OHL-S V2.0
https://ohwr.org/cern_ohl_s_v2.txt
Author: Andrew Dresner
Derelict Robot Industries
Sheet: /
File: Core-Lite.sch
Title: FreeSK8 Receiver
Size: A4
Date: 2021-05-24
Rev: 1.0
KiCad E.D.A. kicad (5.1.5)-3
Id: 1/1