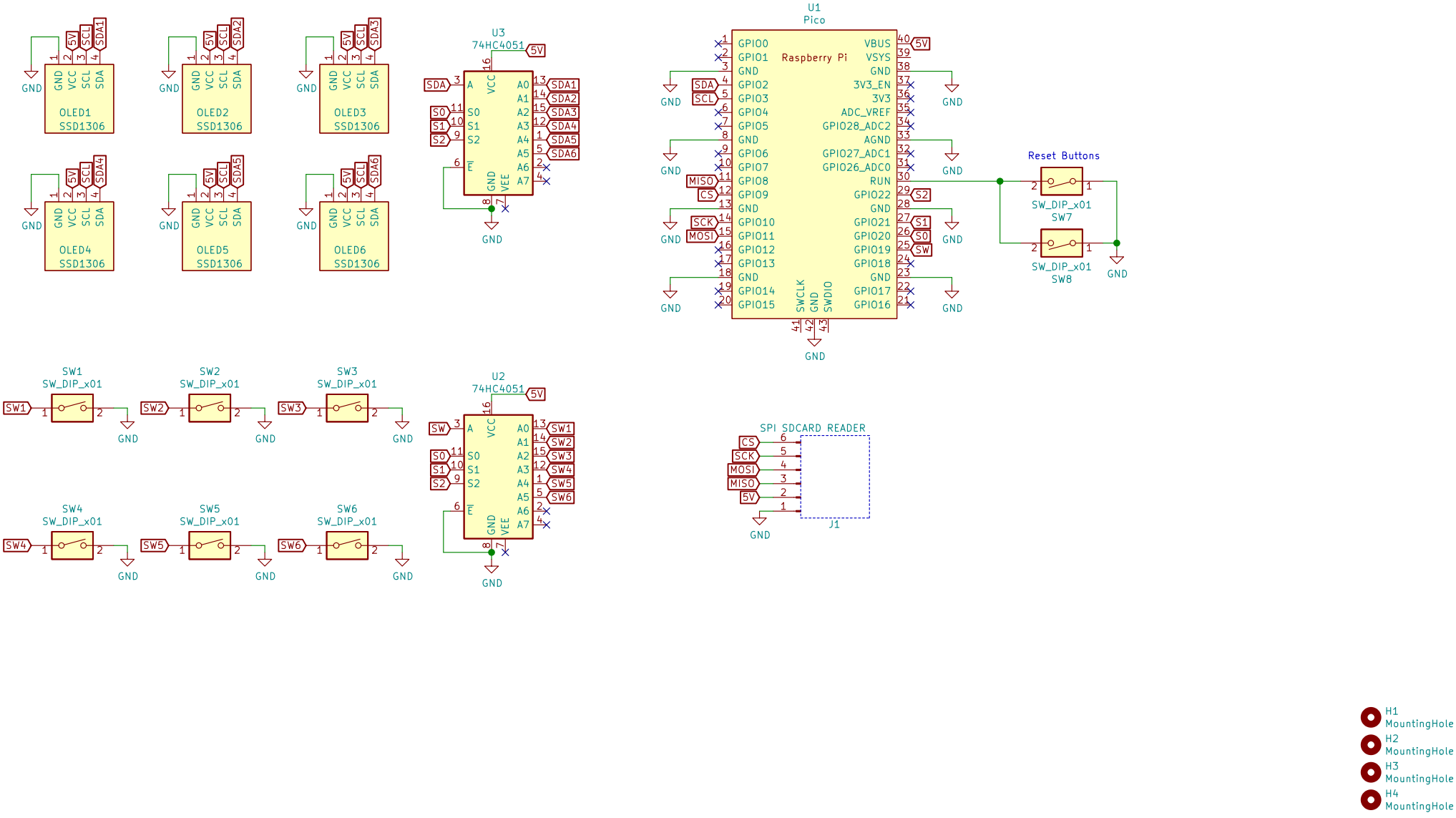

Sheet: /
File: Freedeck_Pico_3x2_rev1_0.sch

Title: FreeDeck_Pico_3x2_PCB

Size: A4	Date: 2021-12-22	Rev: 1.0
KiCad E.D.A. kicad (5.1.9)-1		Id: 1/1