FREENOVE

Free your innovation

Freenove is an open-source electronics platform.

www.freenove.com

About

Freenove is an open-source electronics platform. Freenove is committed to helping customer quickly realize the creative idea and product prototypes, making it easy to get started for enthusiasts of programing and electronics and launching innovative open source products. Our services include:

- Electronic components and modules
- Learning kits for Arduino
- Learning kits for Raspberry Pi
- Learning kits for Technology
- Robot kits
- Auxiliary tools for creations

Our code and circuit are open source. You can obtain the details and the latest information through visiting the following web sites:
http://www.freenove.com
https://github.com/freenove

Your comments and suggestions are warmly welcomed, please send them to the following email address:
support@freenove.com

Support

Freenove provides free and quick technical support, including but not limited to:

- Quality problems of products
- Problems in using products
- Questions for learning and technology
- Opinions and suggestions
- Ideas and thoughts

Please send email to:
support@freenove.com
On working day, we usually reply to you within 24 hours.

Copyright

Freenove reserves all rights to this book. No copies or plagiarizations are allowed for the purpose of commercial use.
The code and circuit involved in this product are released as Creative Commons Attribution ShareAlike 3.0. This means you can use them on your own derived works, in part or completely, as long as you also adopt the same license. Freenove brand and Freenove logo are copyright of Freenove Creative Technology Co., Ltd and cannot be used without formal permission.

Contents

Contents I
Preface 1
Install Processing Software 1
First Use 3
Chapter 1 LED 5
Project 1.1 Blink 5
Project 1.2 MouseLED 11
Chapter 2 LEDBar Graph 13
Project 2.1 FollowLight 13
Chapter 3 PWM 17
Project 3.1 BreathingLED 17
Chapter 4 RGBLED 23
Project 4.1 ColorfulLED 23
Chapter 5 Buzzer 30
Project 5.1 ActiveBuzzer 30
Chapter 6 PCF8591 34
Project 6.1 ADC & DAC 34
Chapter 7 ADC & LED 39
Project 7.1 SoftLight 39
Project 7.2 NightLamp 43
Chapter 8 Thermistor 45
Project 8.1 Thermometer 45
Chapter 9 Motor & Driver 49
Project 9.1 Motor 49
Chapter 10 74HC595 & LEDBar Graph 58
Project 10.1 FollowLight 58
Chapter 11 74HC595 & Seven-segment display 64
Project 11.1 Seven -segment display. 64

Project 11.2 4-digit Seven-segment display....70
Chapter 12 74HC595 & LED Matrix....78
Project 12.1 LED Matrix....78
Chapter 13 I2C-LCD1602....87
Project 13.1 LCD....87
Chapter 14 Joystick....93
Project 14 Joystick....93
Chapter 15 Relay & Motor....98
Project 15.1 Relay & Motor....98
Chapter 16 Stepping Motor....106
Project 16.1 Stepping Motor....106
Chapter 17 Matrix Keypad....115
Project 17.1 Calculator....115
App 1 Oscilloscope....123
App 1.1 Oscilloscope....123
App 2 Control Graphics....126
App 2.1 Ellipse....126
App 3 Pong Game....129
App 3.1 Pong Game....129
App 4 Snake Game....134
App 4.1 Snake Game....134
App 5 Tetris Game....139
App 5.1 Tetris Game....139
What's next?....144

Preface

Processing software is used to write programs that can run on computers. Processing software is free and open source, and runs on the Mac, Windows, and GNU/Linux platforms, which is the same with Arduino software. In fact, the development of Arduino software is based on Processing software, and they still have similar interface.

Programs written using Processing are also called sketches, and Java is the default language. Java language and C++ language has many similarities, so the readers who have learned our basic tutorial are able to understand and write simple Processing sketches quickly.

Processing continues to be an alternative to proprietary software tools with restrictive and expensive licenses, making it accessible to schools and individual students. Its open source status encourages the community participation and collaboration that is vital to Processing's growth. Contributors share programs, contribute code, and build libraries, tools, and modes to extend the possibilities of the software. The Processing community has written more than a hundred libraries to facilitate computer vision, data visualization, music composition, networking, 3D file exporting, and programming electronics.

This tutorial is applicable for Freenove RFID Starter Kit for Raspberry Pi. If you have learned our C and python tutorials, or you have learned basic electronic circuits and programming, you can start learning this tutorial. Otherwise, we recommend that you had better learn our C and Python tutorials first. Sketchs of this tutorial is written by java language in processing software. This tutorial has similar projects to C and python tutorials. And graphical man-machine interface is added to achieve perfect integration of electronic circuits, computer software, images and so on, which will let the readers fully experience the fun of programming and DIY.

This tutorial will introduce how to install and use processing software on Raspberry Pi through some electronic circuit projects. Chapters and sequence is similar to C and python tutorial. Equally, detailed description and explanation is arranged for the skect in each project. Our elaborate electronic circuits and interactive project with Processing are attached in the end, including virtual instruments, games (2D and 3D versions), etc.

Install Processing Software

Processing software / Processing Development Environment (PDE) makes it easy to write Processing programs.
First install Processing software: type following command in the terminal to start installation:

```
curl https://processing.org/download/install-arm.sh | sudo sh
```

Ensures that your RPi always has the Internet to access in the installation process.
You can also download and install the software by visiting the official website https://processing.org/.

After the installation is completed, you can enter the "processing" to open processing software in any directory of the terminal, or open the software processing in the start menu of the system, as shown below:

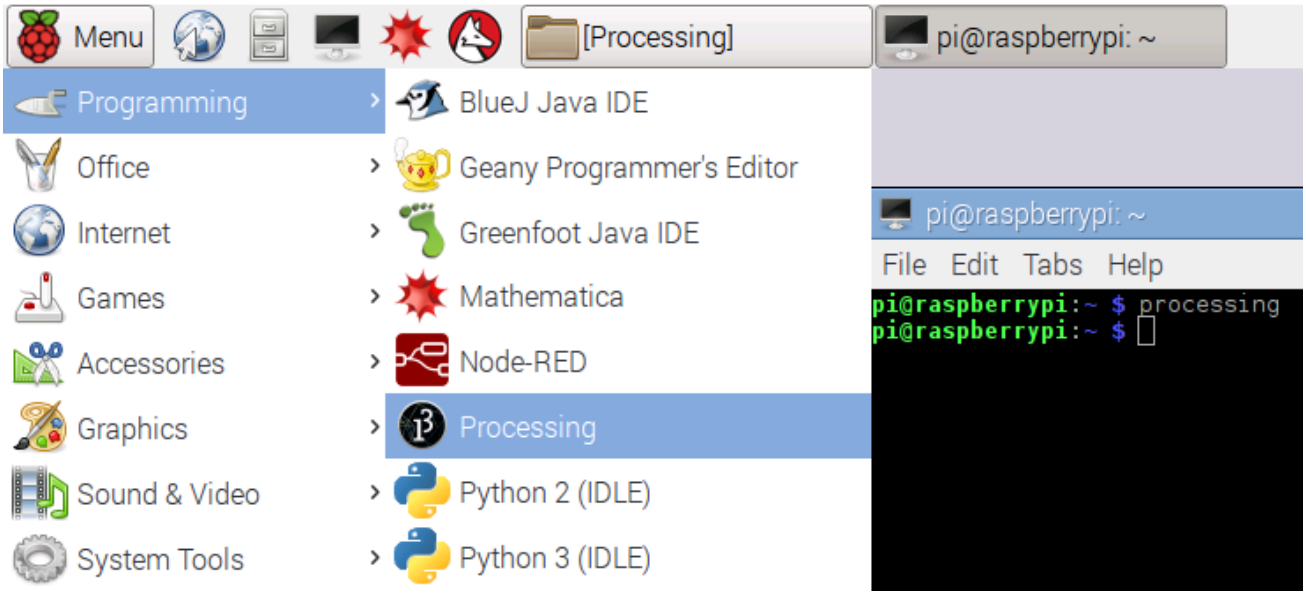

Interface of processing software is shown below:

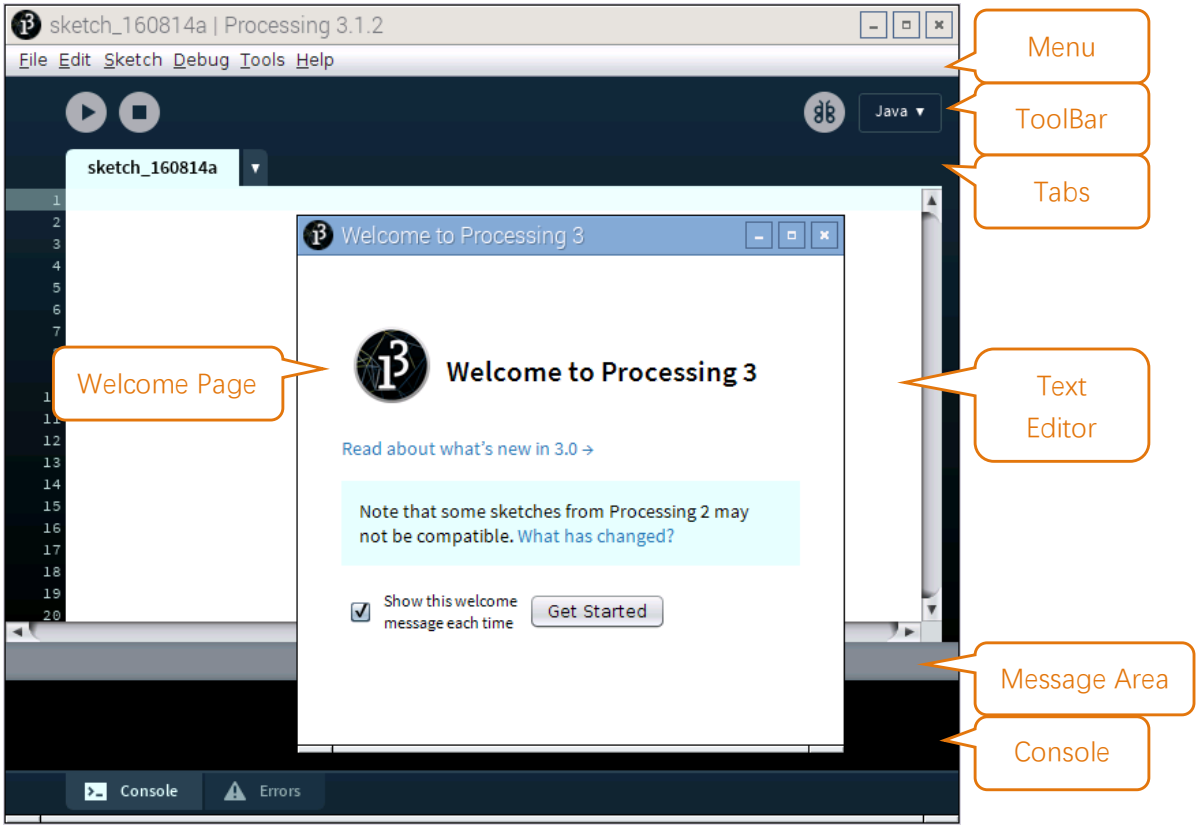

You're now running the Processing Development Environment (or PDE). There's not much to it; the large area is the Text Editor, and there's a row of buttons across the top; this is the toolbar. Below the editor is the Message Area, and below that is the Console. The Message Area is used for one line messages, and the Console is used for more technical details.

First Use

In the editor, type the following:

```
ellipse(50, 50, 80, 80);
```

This line of code means "draw an ellipse, with the center 50 pixels over from the left and 50 pixels down from the top, with a width and height of 80 pixels." Click the Run button (the triangle button in the Toolbar).

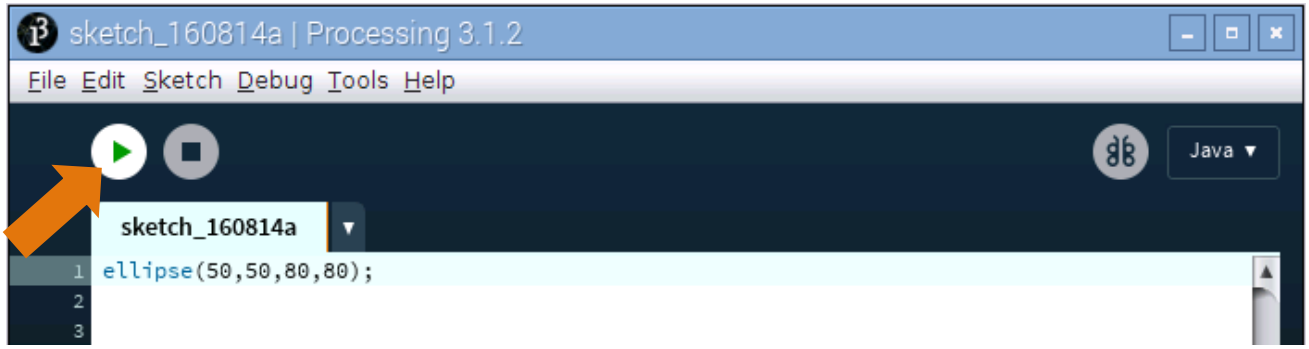

If you've typed everything correctly, you'll see a circle on your screen.

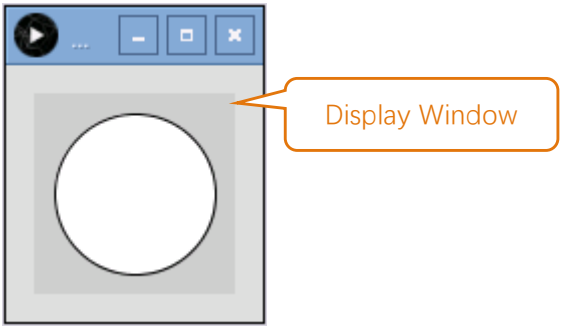

Click on "Stop" (the rectangle button in the Toolbar) or "Close" on Display Window to stop running the program.

If you didn't type it correctly, the Message Area will turn red and complain about an error. If this happens, make sure that you've copied the example code exactly: the numbers should be contained within parentheses and have commas between each of them, and the line should end with a semicolon.

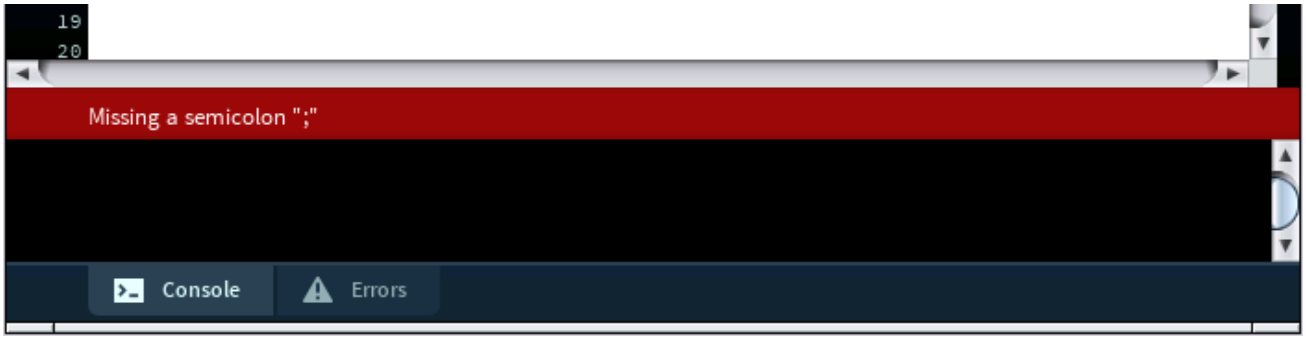

You can export this sketch to an application to run it directly without opening the Processing.

To export the sketch to the application, you must first save it.

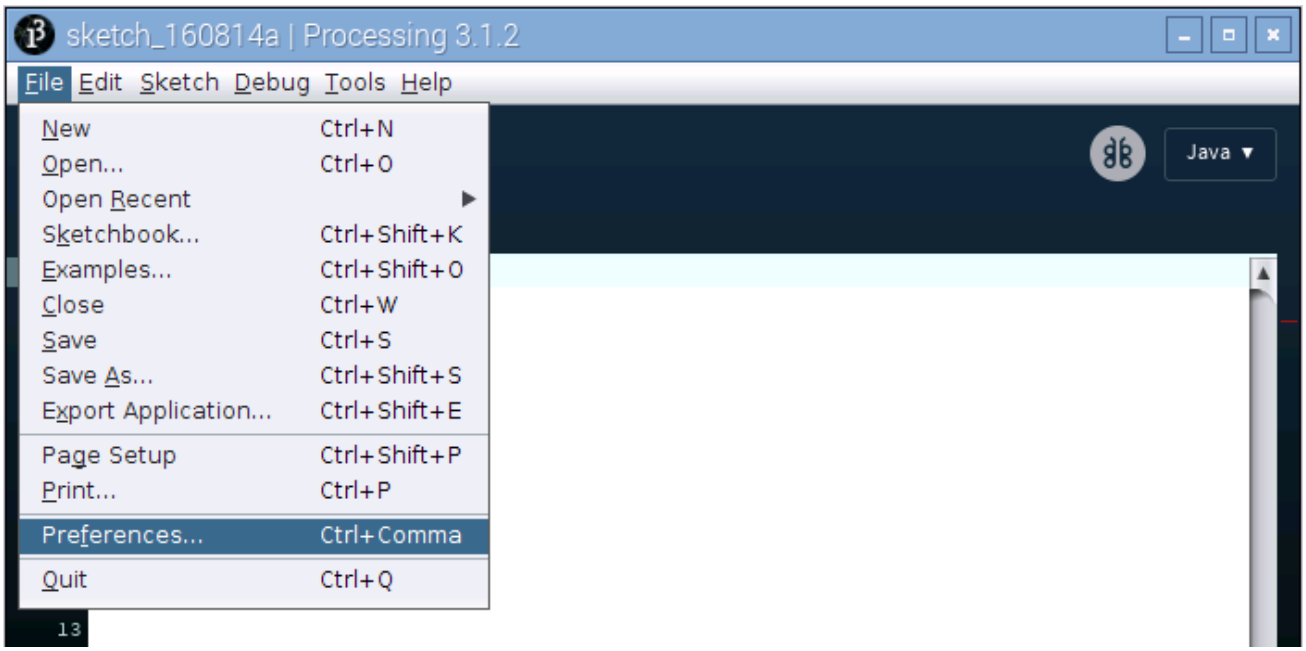

So far, we have completed the first use. I believe you have felt the joy of it.

Chapter 1 LED

We will still start from Blink LED in this chapter, and also learn the usage of some commonly used functions of Processing Software.

Project 1.1 Blink

In this project, we will make a Blink LED and let Display window of Processing Blink at the same time.

Component List

Raspberry Pi 3B x1 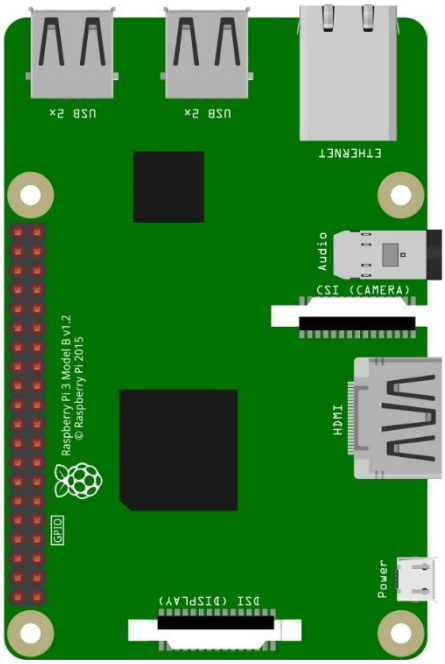	GPIO Extension Board & Wire x1 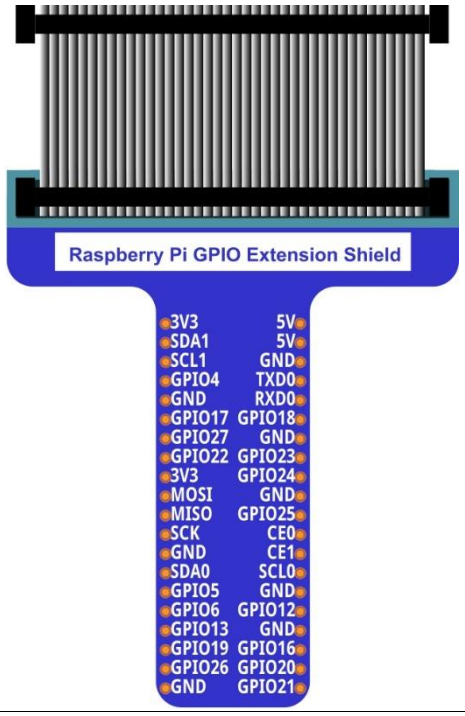
BreadBoard x1 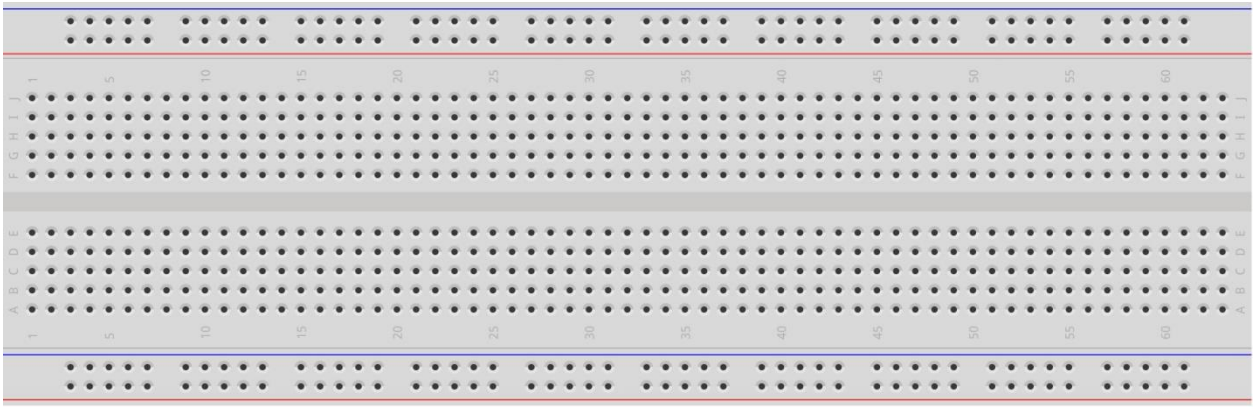	
LED x1	Resistor 220Ω x1
Jumper Wire M/M x2	

In the components list, 3B GPIO, Extension Shield Raspberry and Breadboard are necessary for each experiment. They will be listed only in text form.

Circuit

Disconnect RPi from GPIO Extension Shield first. Then build the circuit according to the circuit diagram and the hardware connection diagram. After the circuit is built and confirmed, connect RPi to GPIO Extension Shield. In addition, short circuit (especially 5V and GND, 3.3V and GND) should be avoid, because short circuit may cause anormal circuit work, or even damage to PRi.

Schematic diagram

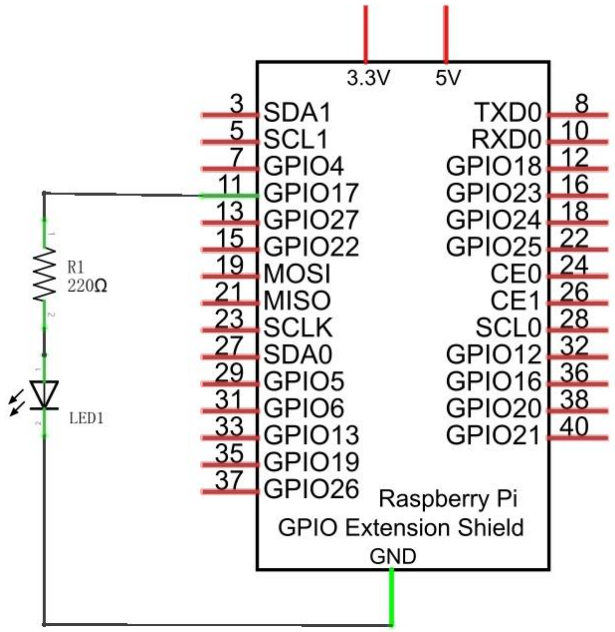

Hardware connection

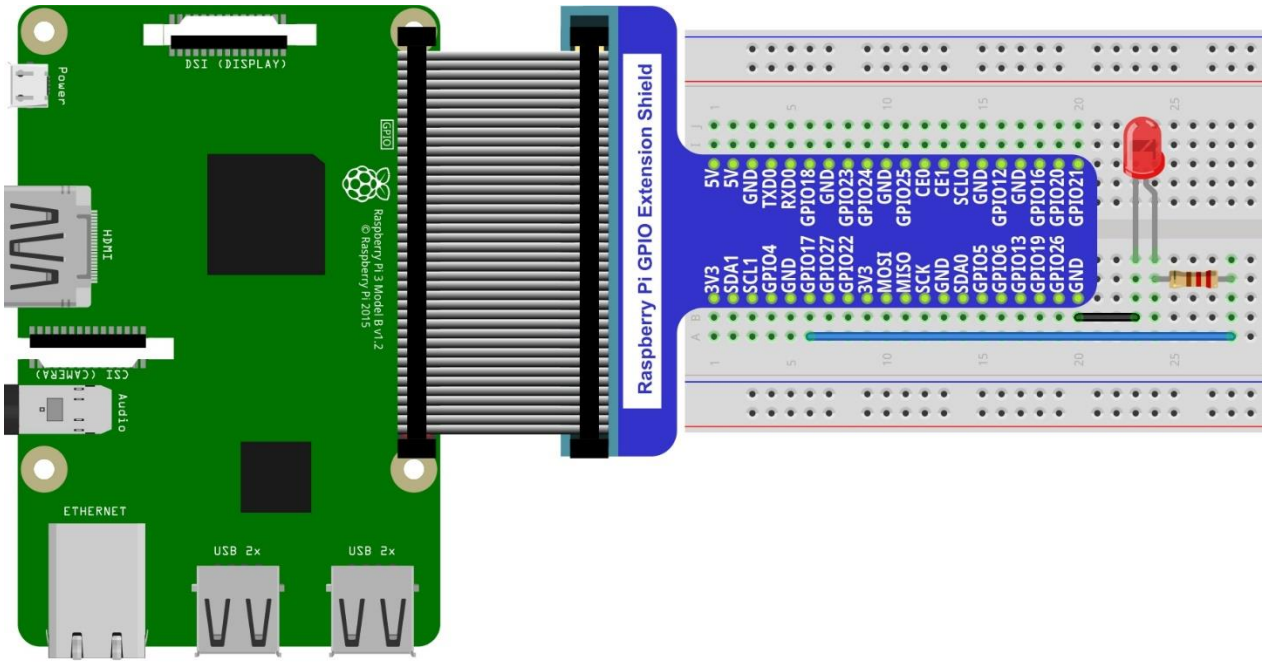

Because Numbering of GPIO Extension Shield is the same as RPi GPIO, latter Hardware connection diagram will only show the part of breadboard and GPIO Extension Shield.

Sketch

Sketch 1.1.1 Blink

First observe the running result of the sketch, and then analyze the code.

1. Use Processing to open the file Sketch_01_1_1_Blink.

```
processing
Freenove_RFID_Starter_Kit_for_Raspberry_Pi/Processing/Sketchs/Sketch_01_1_1_Blink/Sketch_01_1_1_Blink.pde
```

2. Click on "RUN" to run the code.

After the program is executed, LED will start Blinking and background of Display window will change with the change of LED state.

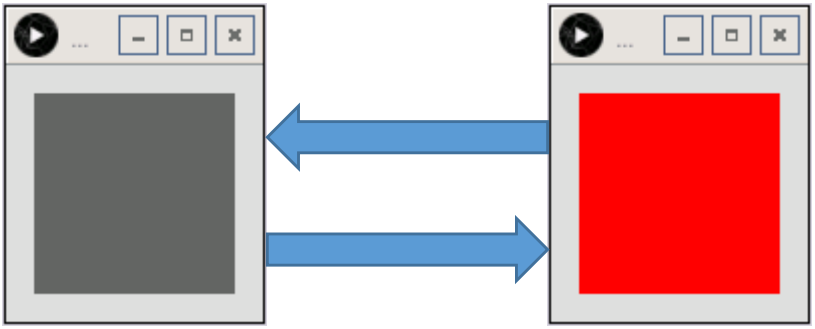

The following is program code:

```
import processing.io.*;

int ledPin = 17;    //define ledPin
boolean ledState = false;    //define ledState

void setup() {
  size(100, 100);
  frameRate(1);        //set frame rate
  GPIO.pinMode(ledPin, GPIO.OUTPUT);    //set the ledPin to output mode
}

void draw() {
  ledState = !ledState;
  if (ledState) {
    GPIO.digitalWrite(ledPin, GPIO.HIGH);    //led on
    background(255, 0, 0); //set the fill color of led on
  } else {
    GPIO.digitalWrite(ledPin, GPIO.LOW);    //led off
    background(102); //set the fill color of led off
  }
}
```

Processing code usually have two functions: setup() and draw(), where the function setup()is only executed once, but the function draw() will be executed circularly. In the function setup(), size(100, 100) specifies the size of the Display Window to 100x100pixl. FrameRate(1) specifies the refresh rate of Display Window to once per second, namely, the draw() function will be executed once per second. GPIO.pinMode (ledPin, GPIO.OUTPUT) is used to set ledPin to output mode.

```
void setup() {
  size(100, 100);
  frameRate(1);         //set frame rate
  GPIO.pinMode(ledPin, GPIO.OUTPUT);    //set the ledPin to output mode
}
```

In draw() function, each execution will invert the variable "ledState". When “ledState” is true, LED is turned on, and the background color of display window is set to red. And when the “ledState” is false, the LED will be turned off and the background color of display window is set to gray. Since the function draw() is executed once per second, the background color of Display Window and the state of LED will also change once per second. Such cycle repeats itself to achieve the effect of blink.

```
void draw() {
  ledState = !ledState;
  if (ledState) {
    GPIO.digitalWrite(ledPin, GPIO.HIGH);    //led on
    background(255, 0, 0); //set the fill color of led on
  } else {
    GPIO.digitalWrite(ledPin, GPIO.LOW);    //led off
    background(102); //set the fill color of led off
  }
}
```

The following is simple description of some functions:

setup()
The setup() function is run once, when the program starts.
draw()
Called directly after setup(), the draw() function continuously executes the lines of code contained inside its block until the program is stopped or noLoop() is called. draw() is called automatically and should never be called explicitly.
size()
Defines the dimension of the display window width and height in units of pixels
framerate()
Specifies the number of frames to be displayed every second
background()
Set the color used for the background of the Processing window.
GPIO.pinMode()
Configures a pin to act either as input or output
GPIO.digitalWrite()

Sets an output pin to be either high or low

All functions used in this code can be found in the Reference of Processing Software, in which built-in functions are described in details, and there are some sample programs. It is recommended for beginners to view more usage and functions of the function. The localization of Reference can be opened by the following steps: click the menu bar "Help"→"Reference".

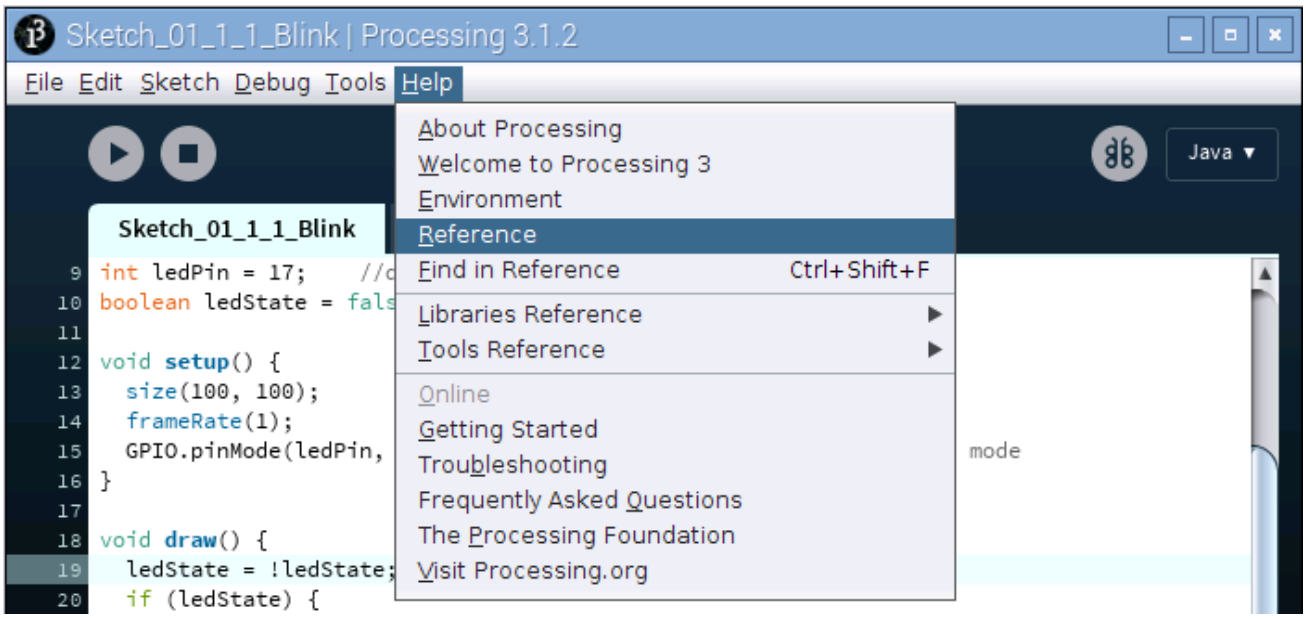

Then the following page will be displayed in the web browser:

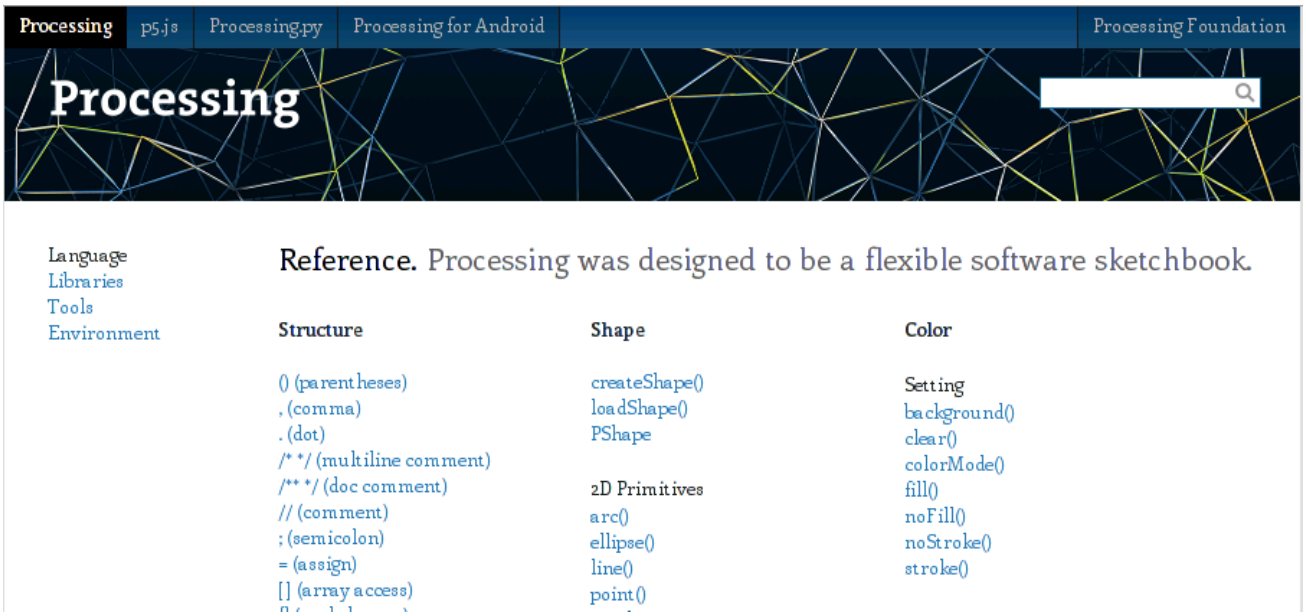

Or directly access to the official website for reference:http://processing.org/reference/

Project 1.2 MouseLED

In this project, we will use the mouse to control the state of LED.
The components and circuits of this project are the same as the last section.

Sketch

Sketch 1.2.1 MouseLED

First observe the running result of the sketch, and then analyze the code.

1. Use Processing to open the file Sketch_01_2_1_MouseLED.

```
processing
Freenove_RFID_Starter_Kit_for_Raspberry_Pi/Processing/Sketchs/Sketch_01_2_1_MouseLED/Sketch_01_2_1_MouseLED.pde
```

2. Click on "RUN" to run the code.

After the program is executed, the LED is under off state, and background color of Display window is gray. Click on Display Window with the mouse, then LED is turned on and Display window background color become red. Click on the Display Window again, then the LED is turned off and the background color become gray, as shown below.

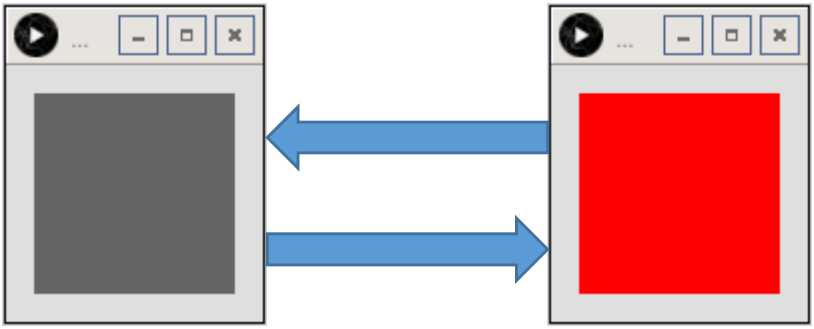

The following is program code:

```
import processing.io.*;

int ledPin = 17;
boolean ledState = false;
void setup() {
  size(100, 100);
  GPIO.pinMode(ledPin, GPIO.OUTPUT);
  background(102);
}

void draw() {
  if (ledState) {
    GPIO.digitalWrite(ledPin, GPIO.HIGH);
    background(255,0,0);
  } else {
```

```
    GPIO.digitalWrite(ledPin, GPIO.LOW);
    background(102);
  }
}

void mouseClicked() { //if the mouse Clicked
  ledState = !ledState;  //Change the led State
}
```

The function mouseClicked() is used in this code. The function is used to capture the mouse click events, which is executed when the mouse is clicked on. We can change the state of the variable “ledState” in this function, to realize controlling LED through clicking on the mouse.

```
void mouseClicked() { //if the mouse Clicked
  ledState = !ledState;  //Change the led State
}
```

Chapter 2 LEDBar Graph

We have learned how to control a LED, and next we will learn how to control a number of LED.

Project 2.1 FollowLight

In this project, we will use the mouse to control the LEDBar Graph

Component List

Raspberry Pi 3B x1 GPIO Extension Board & Wire x1 BreadBoard x1	LED bar graph x1 	Resistor 220Ω x10
Jumper M/M x11 		

Circuit

The network label is used in the circuit diagram below, and the pins with the same network label are connected togather.

Schematic diagram

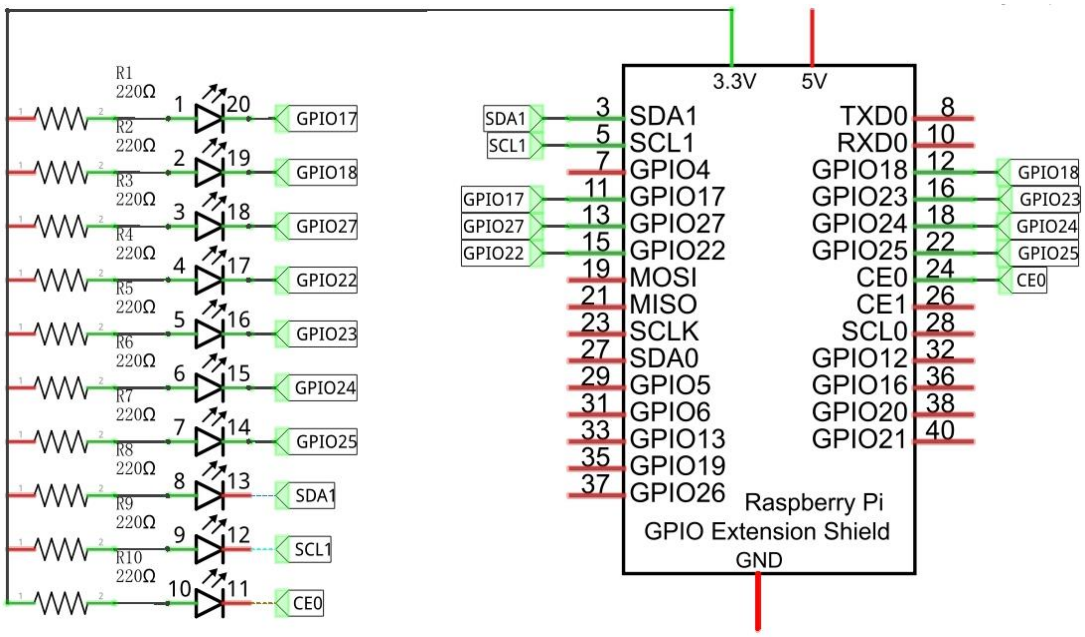

Hardware connection

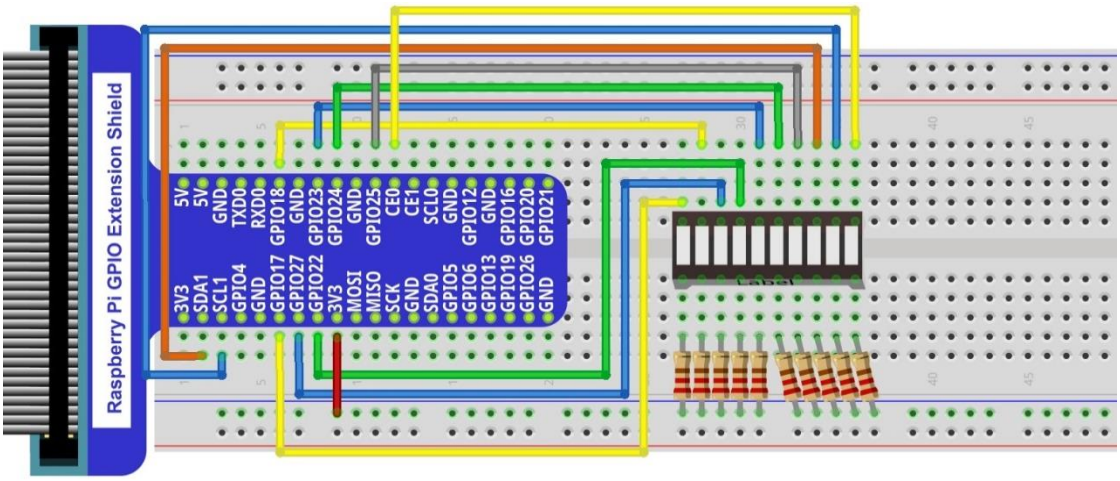

In this circuit, the cathode of LED is connected to GPIO, which is the different from the front circuit. So, LED will be turned on when GPIO output low level in the program.

Sketch

Sketch 2.1.1 FollowLight

First observe the running result of the sketch, and then analyze the code.

1. Use Processing to open the file Sketch_02_1_1_FollowLight.

```
processing
Freenove_RFID_Starter_Kit_for_Raspberry_Pi/Processing/Sketchs/Sketch_02_1_1_FollowLight/Sketch_02_1_1_FollowLight.pde
```

2. Click on "RUN" to run the code.

After the program is executed, slide the mouse in the Display Window, then the state of LEDBar Graph will be changed, as shown below.

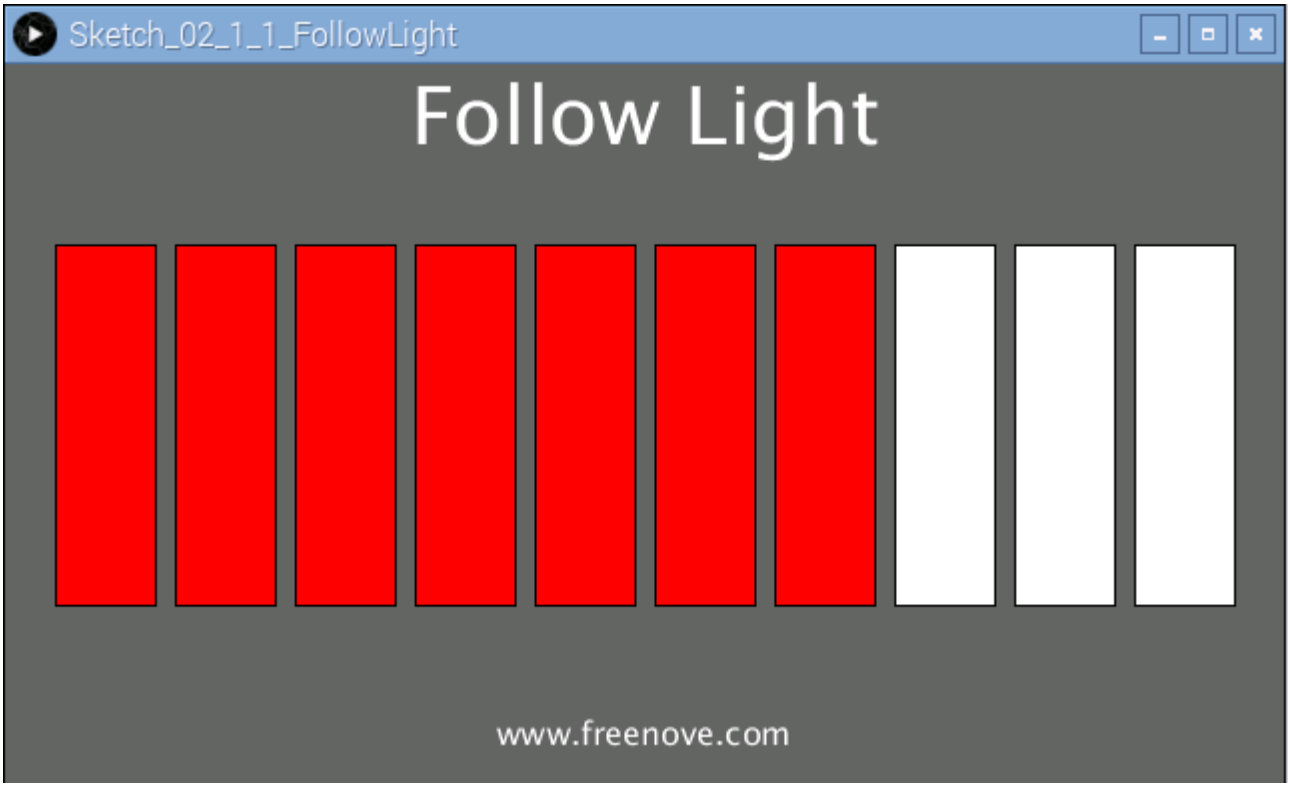

The following is program code:

```
import processing.io.*;

int leds[]={17, 18, 27, 22, 23, 24, 25, 2, 3, 8}; //define ledPins

void setup() {
  size(640, 360);  //display window size
  for (int i=0; i<10; i++) {  //set led Pins to output mode
    GPIO.pinMode(leds[i], GPIO.OUTPUT);
  }
  background(102);
```

```
  textAlign(CENTER);    //set the text centered
  textSize(40);        //set text size
  text("Follow Light", width / 2, 40);    //title
  textSize(16);
  text("www.freenove.com", width / 2, height - 20);    //site
}

void draw() {
  for (int i=0; i<10; i++) {    //draw 10 rectanglar box
    if (mouseX>(25+60*i)) {    //if the mouse cursor on the right of rectanglar box
      fill(255, 0, 0);        //fill the rectanglar box in red color
      GPIO.digitalWrite(leds[i], GPIO.LOW);  //turn on the corresponding led
    } else {
      fill(255, 255, 255);  //else fill the rectanglar box in white color
      GPIO.digitalWrite(leds[i], GPIO.HIGH);  //and turn off the led
    }
    rect(25+60*i, 90, 50, 180);    //draw a rectanglar box
  }
}
```

In the function draw(), we draw 10 rectangles to represent 10 LEDs of LEDBar Graph. We make rectangles on the left of mouse filled with red, corresponding LEDs turned on. And make We make rectangles on the right of mouse filled with red, corresponding LEDs turned off. In this way, when slide the mouse to right, the more LEDs on the left of mouse will be turned on. When to the left, the reverse is the case.

```
void draw() {
  for (int i=0; i<10; i++) {    //draw 10 rectanglar box
    if (mouseX>(25+60*i)) {    //if the mouse cursor on the right of rectanglar box
      fill(255, 0, 0);        //fill the rectanglar box in red color
      GPIO.digitalWrite(leds[i], GPIO.LOW);  //turn on the corresponding led
    } else {
      fill(255, 255, 255);  //else fill the rectanglar box in white color
      GPIO.digitalWrite(leds[i], GPIO.HIGH);  //and turn off the led
    }
    rect(25+60*i, 90, 50, 180);    //draw a rectanglar box
  }
}
```

Chapter 3 PWM

In this chapter, we will learn how to use PWM.

Project 3.1 BreathingLED

In this project, we will make a breathing LED, and the Display Window will show a breathing LED pattern and a progress bar, at the same time.

Component List

Raspberry Pi 3B x1 GPIO Extension Board & Wire x1 BreadBoard x1	LED x1 	Resistor 220Ω x1
Jumper M/M x2 		

Circuit

Schematic diagram

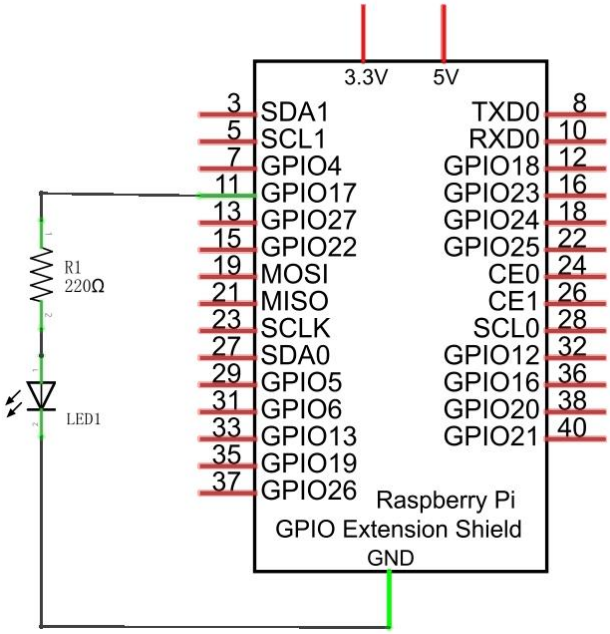

Hardware connection

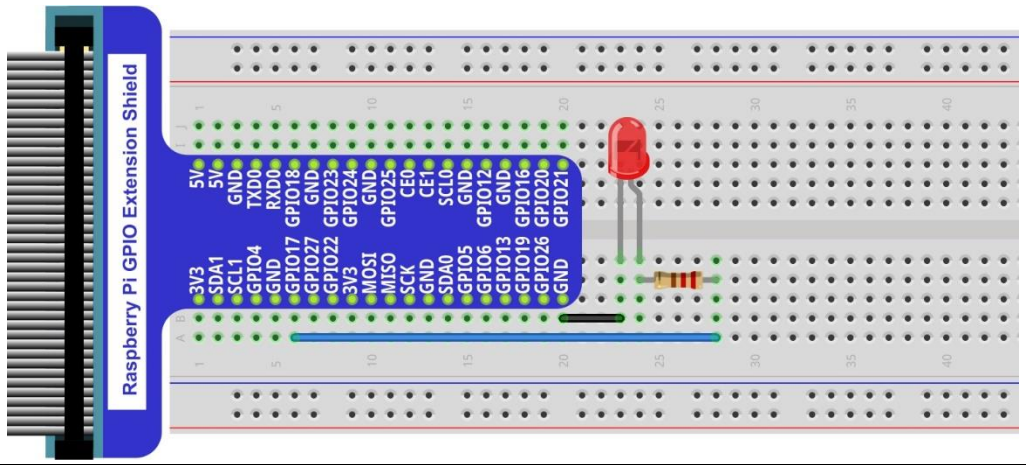

Sketch

Sketch 3.1.1 BreathingLED

First observe the running result of the sketch, and then analyze the code.

1. Use Processing to open the file Sketch_03_1_1_BreathingLED.

```
processing
Freenove_RFID_Starter_Kit_for_Raspberry_Pi/Processing/Sketchs/Sketch_03_1_1_BreathingLED/Sketch_03_1_1_BreathingLED.pde
```

2. Click on "RUN" to run the code.

After the program is executed, the LED in circuit will be brightened gradually, and the color of LED pattern in Display Window will be deepen gradually at the same time. The progress bar under the patten shows the percentage of completion, and clicking on the inside of window with the mouse can change the progress.

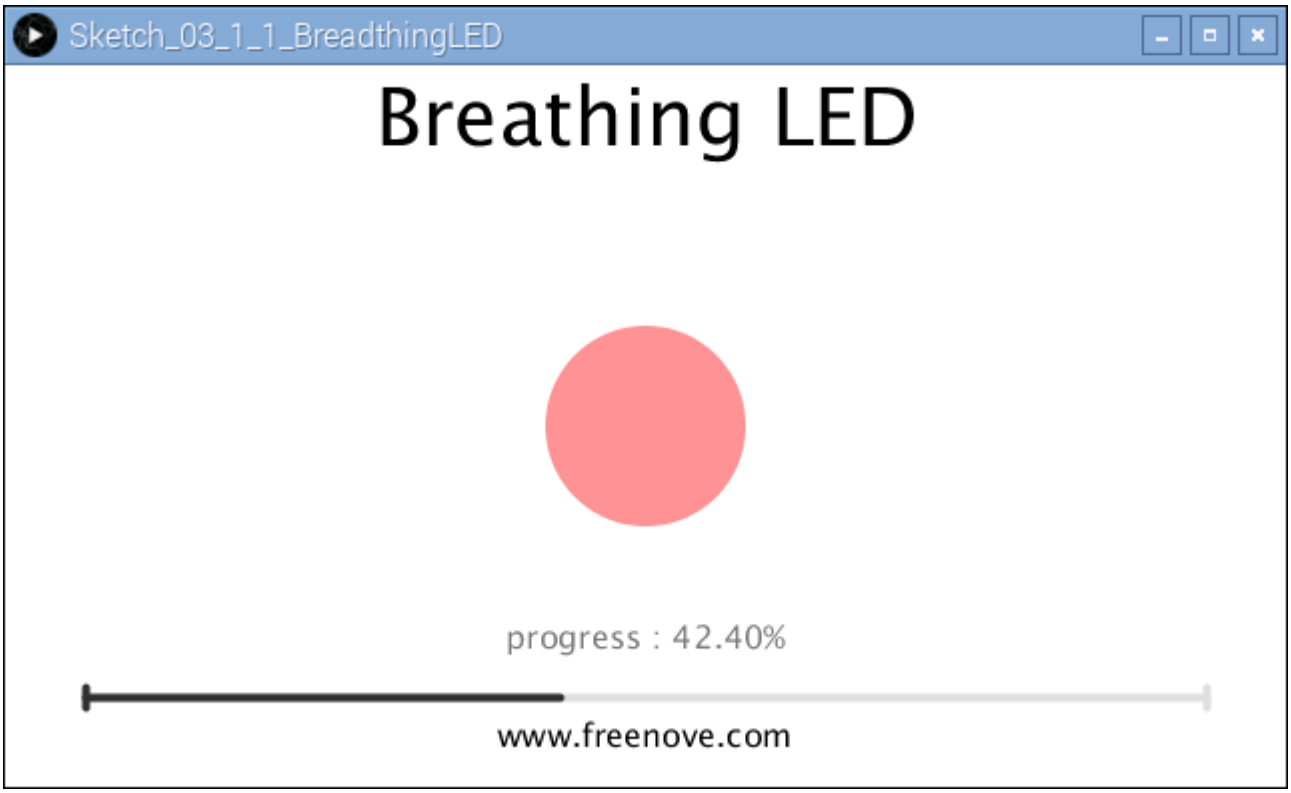

The following is program code:

```
import processing.io.*;

int ledPin = 17;     //led Pin
int borderSize = 40;  //
float t = 0.0;       //progress percent
float tStep = 0.004;     // speed
SOFTPWM p = new SOFTPWM(ledPin, 10, 100);     //Create a PWM pin,initialize the duty cycle and period
void setup() {
  size(640, 360);  //display window size
```

```
  strokeWeight(4);  //stroke Weight
}

void draw() {
  // Show static value when mouse is pressed, animate otherwise
  if (mousePressed) {
    int a = constrain(mouseX, borderSize, width - borderSize);
    t = map(a, borderSize, width - borderSize, 0.0, 1.0);
  } else {
    t += tStep;
    if (t > 1.0) t = 0.0;
  }
  p.softPwmWrite((int)(t*100)); //wirte the duty cycle according to t
  background(255);  //A white background
  titleAndSiteInfo();  //title and Site infomation

  fill(255, 255-t*255, 255-t*255);  //cycle
  ellipse(width/2, height/2, 100, 100);

  pushMatrix();
  translate(borderSize, height - 45);
  int barLength = width - 2*borderSize;

  barBgStyle();  //progressbar bg
  line(0, 0, barLength, 0);
  line(barLength, -5, barLength, 5);

  barStyle();  //progressbar
  line(0, -5, 0, 5);
  line(0, 0, t*barLength, 0);

  barLabelStyle();    //progressbar label
  text("progress : "+nf(t*100,2,2),barLength/2,-25);
  popMatrix();
}

void titleAndSiteInfo() {
  fill(0);
  textAlign(CENTER);    //set the text centered
  textSize(40);        //set text size
  text("Breathing Light", width / 2, 40);    //title
  textSize(16);
  text("www.freenove.com", width / 2, height - 20);    //site
}
```

```
void barBgStyle() {
  stroke(220);
  noFill();
}

void barStyle() {
  stroke(50);
  noFill();
}

void barLabelStyle() {
  noStroke();
  fill(120);
}
```

First, use SOFTPWM class to create a PWM pin, which is used to control the brightness of LED. Then define a variable "t" and variable "tStep" to control the PWM duty cycle and add-self rate.

```
float t = 0.0;      //progress percent
float tStep = 0.004;    // speed
SOFTPWM p = new SOFTPWM(ledPin, 10, 100);
```

In the function draw, if there is a click, the coordinate in X direction of mouse will be mapped into the duty cycle "t", otherwise, duty cycle "t" will be increased gradually. Then output PWM with the duty cycle.

```
  if (mousePressed) {
    int a = constrain(mouseX, borderSize, width - borderSize);
    t = map(a, borderSize, width - borderSize, 0.0, 1.0);
  } else {
    t += tStep;
    if (t > 1.0) t = 0.0;
  }
  p.softPwmWrite((int)(t*100)); //wirte the duty cycle according to t
```

The next code is designed to draw a circle filled colors with different depth according to the "t" value, which is used to simulate the of LED with different brightness.

```
  fill(255, 255-t*255, 255-t*255);  //cycle
  ellipse(width/2, height/2, 100, 100);
```

The last code is designed to draw the progress bar and the percentage of the progress.

```
  barBgStyle();  //progressbar bg
  line(0, 0, barLength, 0);
  line(barLength, -5, barLength, 5);

  barStyle();  //progressbar
  line(0, -5, 0, 5);
```

```
line(0, 0, t*barLength, 0);

barLabelStyle();     //progressbar label
text("progress : "+nf(t*100,2,2),barLength/2,-25);
```

In processing software, you will see a tag page "SOFTPWM" in addition to above code.

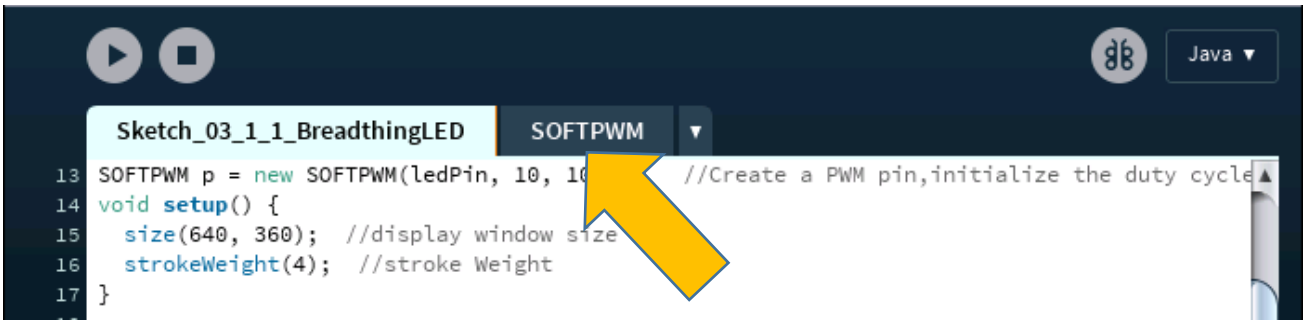

The file contains some information about the SOFTPWM class.

class SOFTPWM

```
public SOFTPWM(int iPin, int dc, int pwmRange):
```

Constructor, used to create a PWM pin, set the pwmRange and initial duty cycle. The minimum of pwmRange is 0.1ms. So pwmRange=100 means that the PWM cycle is 0.1ms*100=10ms.

```
public void softPwmWrite(int value)
```

Set PMW duty cycle.

```
public void softPwmStop()
```

Stop outputting PMW.

Chapter 4 RGBLED

In this chapter, we will learn how to use RGBLED.

Project 4.1 ColorfulLED

This project will make a ColorfulLED, namely, use Processing to control the color of RGBLED.

Component List

Raspberry Pi 3B x1 GPIO Extension Board & Wire x1 BreadBoard x1	RGBLED x1 	Resistor 220Ω x3
Jumper M/M x4 		

Circuit

Schematic diagram

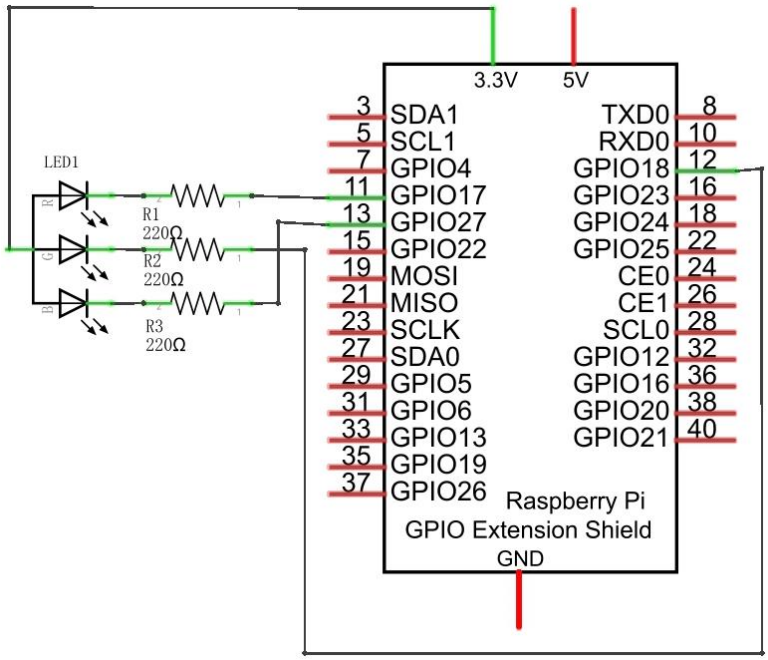

Hardware connection

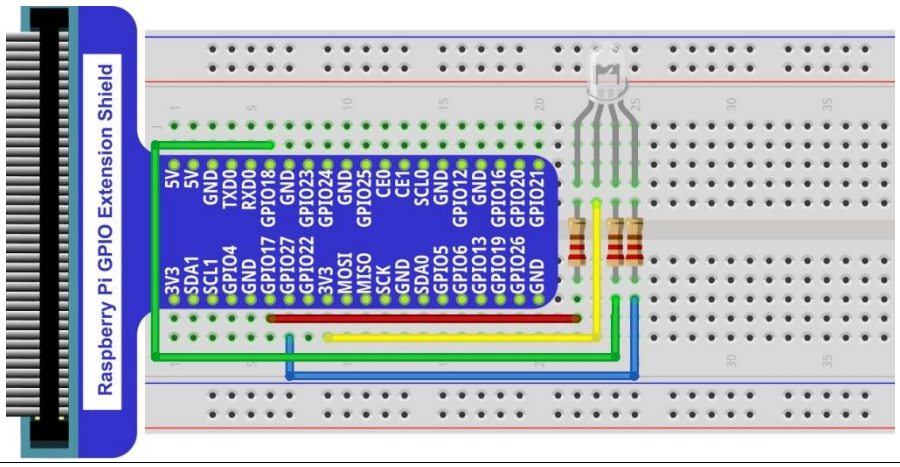

Sketch

Sketch 4.1.1 ColorfulLED

First observe the running result of the sketch, and then analyze the code.

1. Use Processing to open the file Sketch_03_1_1_BreathingLED.

```
processing
Freenove_RFID_Starter_Kit_for_Raspberry_Pi/Processing/Sketchs/Sketch_04_1_1_ColorfulLED/Sketch_04_1_1_ColorfulLED.pde
```

2. Click on "RUN" to run the code.

After the program is executed, RGBLED is under off state. And in Display Window, the pattern used to simulate LED is in black. Red, Green and Blue progress are in 0. By using mouse to click on and drag any progress bar, you can set the PWM duty cycle of color channels, and then RGBLED used in the circuit will show corresponding color. At the same time, the pattern in Display Window will show the same color.

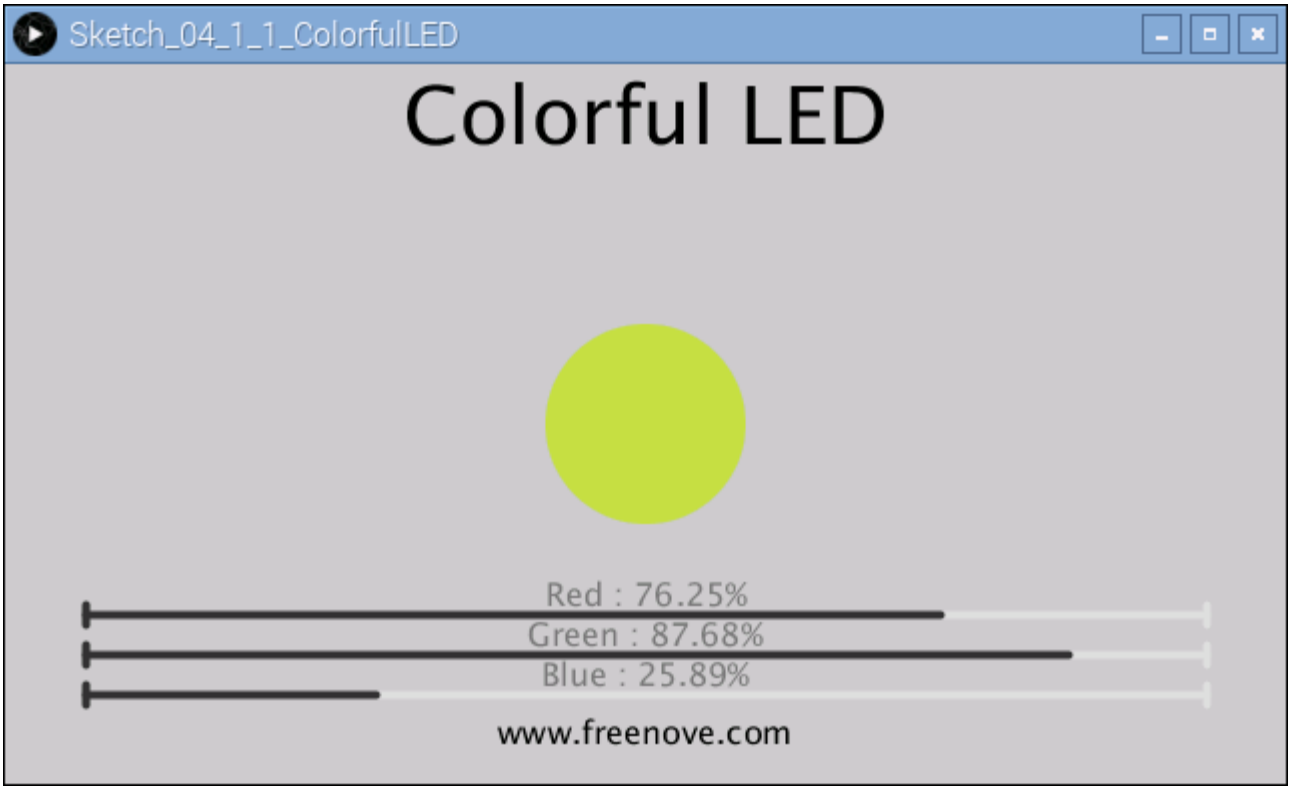

This project contains a lot of code files, and the core code is contained in the file Sketch_04_1_1_ColorfulLED. The other files only contain some custom classes.

The following is program code:

```
import processing.io.*;

int bluePin = 17;    //blue Pin
int greenPin = 27;  //green Pin
int redPin = 22;    //red Pin
int borderSize = 40;  //picture border size
//Create a PWM pin,initialize the duty cycle and period
SOFTPWM pRed = new SOFTPWM(redPin, 100, 100);
SOFTPWM pGreen = new SOFTPWM(greenPin, 100, 100);
SOFTPWM pBlue = new SOFTPWM(bluePin, 100, 100);
//instantiate three ProgressBar Object
ProgressBar rBar, gBar, bBar;
boolean rMouse = false, gMouse = false, bMouse = false;
void setup() {
  size(640, 360);  //display window size
  strokeWeight(4);  //stroke Weight
  //define the ProgressBar length
  int barLength = width - 2*borderSize;
  //Create ProgressBar Object
  rBar = new ProgressBar(borderSize, height - 85, barLength);
  gBar = new ProgressBar(borderSize, height - 65, barLength);
  bBar = new ProgressBar(borderSize, height - 45, barLength);
  //Set ProgressBar's title
  rBar.setTitle("Red");gBar.setTitle("Green");bBar.setTitle("Blue");
}

void draw() {
  background(200);  //A white background
  titleAndSiteInfo();  //title and Site infomation

  fill(rBar.progress*255, gBar.progress*255, bBar.progress*255);  //cycle color
  ellipse(width/2, height/2, 100, 100);  //show cycle

  rBar.create();  //Show progressBar
  gBar.create();
  bBar.create();
}

void mousePressed() {
  if ( (mouseY< rBar.y+5) && (mouseY>rBar.y-5) ) {
    rMouse = true;
  } else if ( (mouseY< gBar.y+5) && (mouseY>gBar.y-5) ) {
    gMouse = true;
```

```
  } else if ( (mouseY< bBar.y+5) && (mouseY>bBar.y-5) ) {
    bMouse = true;
  }
}
void mouseReleased() {
  rMouse = false;
  bMouse = false;
  gMouse = false;
}
void mouseDragged() {
  int a = constrain(mouseX, borderSize, width - borderSize);
  float t = map(a, borderSize, width - borderSize, 0.0, 1.0);
  if (rMouse) {
    pRed.softPwmWrite((int)(100-t*100)); //wirte the duty cycle according to t
    rBar.setProgress(t);
  } else if (gMouse) {
    pGreen.softPwmWrite((int)(100-t*100)); //wirte the duty cycle according to t
    gBar.setProgress(t);
  } else if (bMouse) {
    pBlue.softPwmWrite((int)(100-t*100)); //wirte the duty cycle according to t
    bBar.setProgress(t);
  }
}

void titleAndSiteInfo() {
  fill(0);
  textAlign(CENTER);    //set the text centered
  textSize(40);        //set text size
  text("Colorful LED", width / 2, 40);    //title
  textSize(16);
  text("www.freenove.com", width / 2, height - 20);    //site
}
```

In the code, first create three PWM pins and three progress bars to control RGBLED.

```
SOFTPWM pRed = new SOFTPWM(redPin, 100, 100);
SOFTPWM pGreen = new SOFTPWM(greenPin, 100, 100);
SOFTPWM pBlue = new SOFTPWM(bluePin, 100, 100);
//instantiate three ProgressBar Object
ProgressBar rBar, gBar, bBar;
```

And then in function setup(), define position and length of progress bar ccording to the size of Display Window, and set the name of each progress bar.

```
void setup() {
  size(640, 360);  //display window size
```

```
  strokeWeight(4);  //stroke Weight
  //define the ProgressBar length
  int barLength = width - 2*borderSize;
  //Create ProgressBar Object
  rBar = new ProgressBar(borderSize, height - 85, barLength);
  gBar = new ProgressBar(borderSize, height - 65, barLength);
  bBar = new ProgressBar(borderSize, height - 45, barLength);
  //Set ProgressBar's title
  rBar.setTitle("Red");gBar.setTitle("Green");bBar.setTitle("Blue");
}
```

In function draw(), first set background, header and other basic information. Then draw a circle and set its color according to the duty cycle of three channel of RGB. Finally draw three progress bars.

```
void draw() {
  background(200);  //A white background
  titleAndSiteInfo();  //title and Site infomation

  fill(rBar.progress*255, gBar.progress*255, bBar.progress*255);  //cycle color
  ellipse(width/2, height/2, 100, 100);  //show cycle

  rBar.create();  //Show progressBar
  gBar.create();
  bBar.create();
}
```

System function mousePressed(), mouseReleased() and mouseDragged() are used to determine whether the mouse drag the progress bar and set the schedule. If the mouse button is pressed in a progress bar, then the mousePressed () the progress of a flag *Mouse is set to true, mouseDragged (mouseX), in the mapping progress value set at the same time, the progress of the corresponding schedule and PWM. When the mouse is released, empty all the flags in the mouseReleased ().

```
void mousePressed() {
  if ( (mouseY< rBar.y+5) && (mouseY>rBar.y-5) ) {
    rMouse = true;
  } else if ( (mouseY< gBar.y+5) && (mouseY>gBar.y-5) ) {
    gMouse = true;
  } else if ( (mouseY< bBar.y+5) && (mouseY>bBar.y-5) ) {
    bMouse = true;
  }
}
void mouseReleased() {
  rMouse = false;
  bMouse = false;
  gMouse = false;
}
```

```
void mouseDragged() {
  int a = constrain(mouseX, borderSize, width - borderSize);
  float t = map(a, borderSize, width - borderSize, 0.0, 1.0);
  if (rMouse) {
    pRed.softPwmWrite((int)(100-t*100)); //wirte the duty cycle according to t
    rBar.setProgress(t);
  } else if (gMouse) {
    pGreen.softPwmWrite((int)(100-t*100)); //wirte the duty cycle according to t
    gBar.setProgress(t);
  } else if (bMouse) {
    pBlue.softPwmWrite((int)(100-t*100)); //wirte the duty cycle according to t
    bBar.setProgress(t);
  }
}
```

About class ProgressBar：

class ProgressBar

This is a custom class that is used to create a progress bar.

`public ProgressBar(int ix, int iy, int barlen)`

Constructor used create ProgressBar, the parameters for coordinates X , Y and length of ProgressBar.

`public void setTitle(String str)`

Used to set the name of progress bar, which will be displayed in middle of the progress bar.

`public void setProgress(float pgress)`

Used to set the progress of progress bar. The parameter: 0<pgress<1.0.

`public void create() & public void create(float pgress)`

Used to draw progress bar.

Chapter 5 Buzzer

In this chapter we will learn how to use buzzer.

Project 5.1 ActiveBuzzer

This project will use the mouse to control a active buzzer.

Component List

Raspberry Pi 3B x1 GPIO Extension Board & Wire x1 BreadBoard x1		Jumper M/M x7 		
NPN transistorx1 	Active buzzer x1 	Push button x1 	Resistor 1kΩ x1 	Resistor 10kΩ x2

Circuit

Schematic diagram

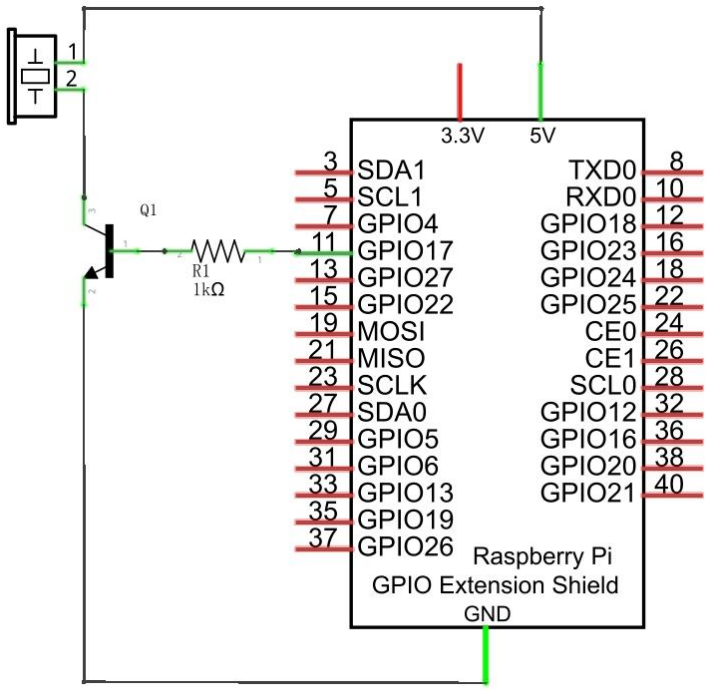

Hardware connection

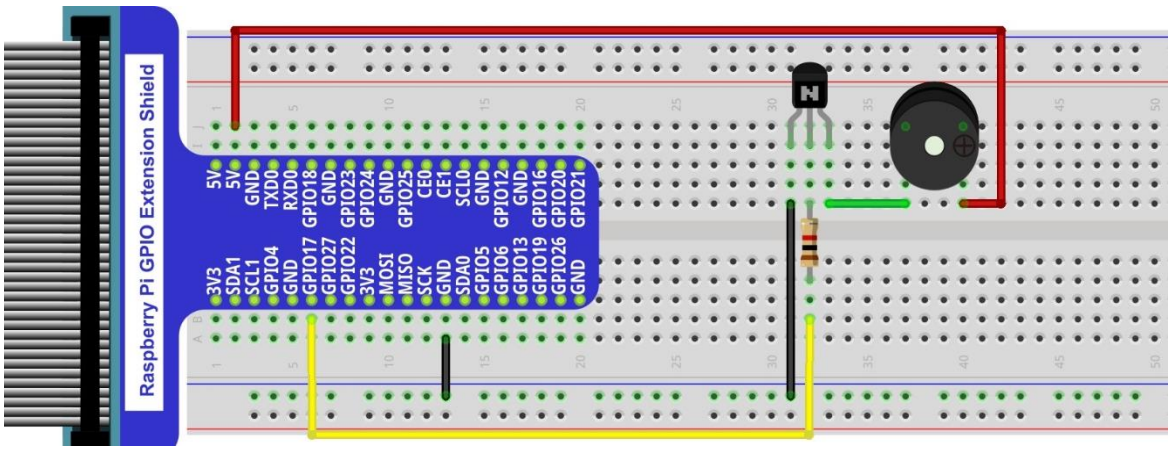

Note: in this circuit, the power supply for buzzer is 5V, and pull-up resistor of the button connected to the power 3.3V. The buzzer can work when connected to power 3.3V, but it will reduce the loudness.

Sketch

Sketch 5.1.1 ActiveBuzzer

First observe the running result of the sketch, and then analyze the code.

1. Use Processing to open the file Sketch_05_1_1_ActiveBuzzer.

```
processing
Freenove_RFID_Starter_Kit_for_Raspberry_Pi/Processing/Sketchs/Sketch_05_1_1_ActiveBuzzer/Sketch_05_1_1_ActiveBuzzer.pde
```

2. Click on "RUN" to run the code.

After the program is executed, use the mouse to click on any position of the Display Window, then Active Buzzer begins to sound and arc graphics(Schematic of sounding) will appear next to the buzzer pattern in Display Window. Click the mouse again, then Active Buzzer stops sounding and arc graphics disappeare.

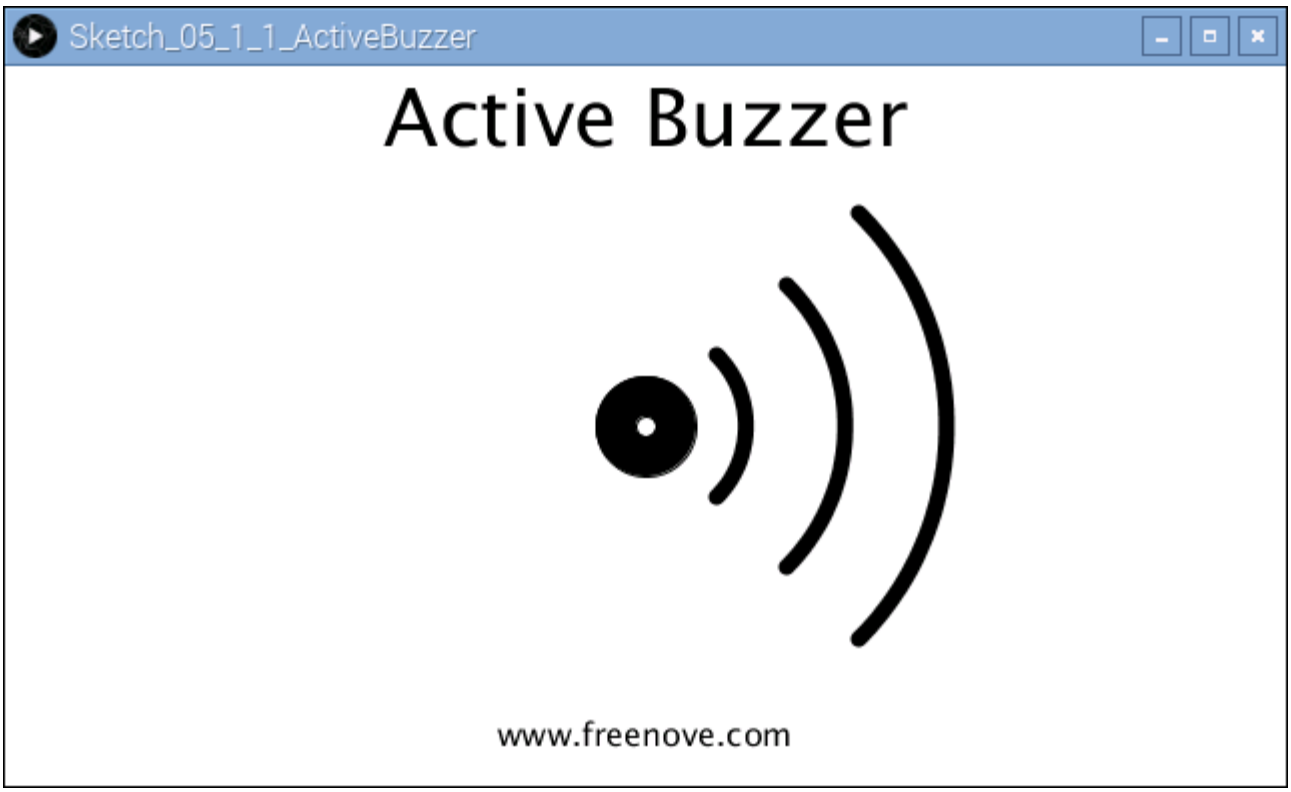

The following is program code:

```
import processing.io.*;

int buzzerPin = 17;
boolean buzzerState = false;
void setup() {
  size(640, 360);
  GPIO.pinMode(buzzerPin, GPIO.OUTPUT);
}
```

```
void draw() {
  background(255);
  titleAndSiteInfo();    //title and site infomation
  drawBuzzer();       //buzzer img
  if (buzzerState) {
    GPIO.digitalWrite(buzzerPin, GPIO.HIGH);
    drawArc();      //Sounds waves img
  } else {
    GPIO.digitalWrite(buzzerPin, GPIO.LOW);
  }
}

void mouseClicked() { //if the mouse Clicked
  buzzerState = !buzzerState;  //Change the buzzer State
}
void drawBuzzer() {
  strokeWeight(1);
  fill(0);
  ellipse(width/2, height/2, 50, 50);
  fill(255);
  ellipse(width/2, height/2, 10, 10);
}
void drawArc() {
  noFill();
  strokeWeight(8);
  for (int i=0; i<3; i++) {
    arc(width/2, height/2, 100*(1+i), 100*(1+i), -PI/4, PI/4, OPEN);
  }
}
void titleAndSiteInfo() {
  fill(0);
  textAlign(CENTER);    //set the text centered
  textSize(40);        //set text size
  text("Active Buzzer", width / 2, 40);    //title
  textSize(16);
  text("www.freenove.com", width / 2, height - 20);    //site
}
```

Code in this project is based on similar logic with the previous "MouseLED". And the difference is that this project needs to draw the buzzer pattern and arc graphics after the buzzer sounding.

Chapter 6 PCF8591

In this chapter we will learn how to use AD/DA chip, PCF8591.

Project 6.1 ADC & DAC

This project uses ADC function of PCF8591 to read potentiometer voltage value and display the value on Display Window. And then use its DAC function to output the voltage value to turn on LED.

Component List

Raspberry Pi 3B x1 GPIO Extension Board & Wire x1 BreadBoard x1		Jumper M/M x16 		
Rotary potentiometer x1 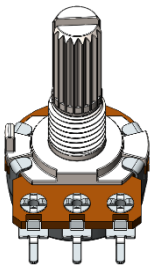	PCF8591 x1 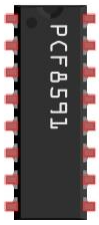	Resistor 10kΩ x2 	Resistor 220Ω x1 	LED x1

Circuit

Schematic diagram

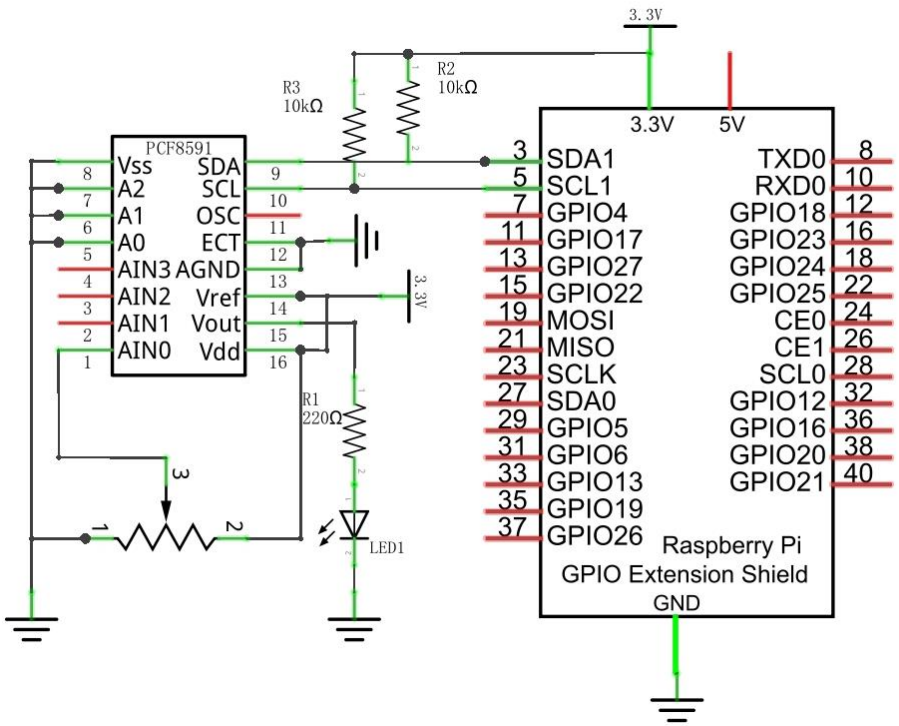

Hardware connection

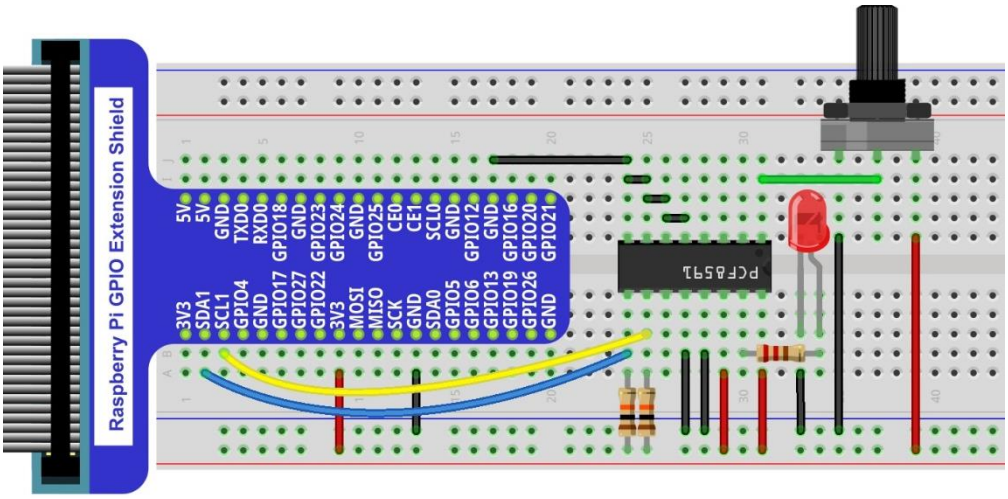

Sketch

Sketch 6.1.1 PCF8591

First observe the running result of the sketch, and then analyze the code.

1. Use Processing to open the file Sketch_05_1_1_ActiveBuzzer.

```
processing
Freenove_RFID_Starter_Kit_for_Raspberry_Pi/Processing/Sketchs/Sketch_06_1_1_PCF8591/Sketch_06_1_1_PCF8591.pde
```

2. Click on "RUN" to run the code.

After the program is executed, Display Window shows the voltage value of the potentiometer, the ADC and DAC value. And ADC value and DAC value are the same. Rotate the potentiometer to change the voltage output by potentiometer. Because the turn-on voltage for red LED is about 1.6V, when the voltage is less than 1.6V, the LED is in off state. When the voltage is greater than 1.6V, the LED is turned on. Continue to increase the DAC value, then the LED brightness will increase accordingly.

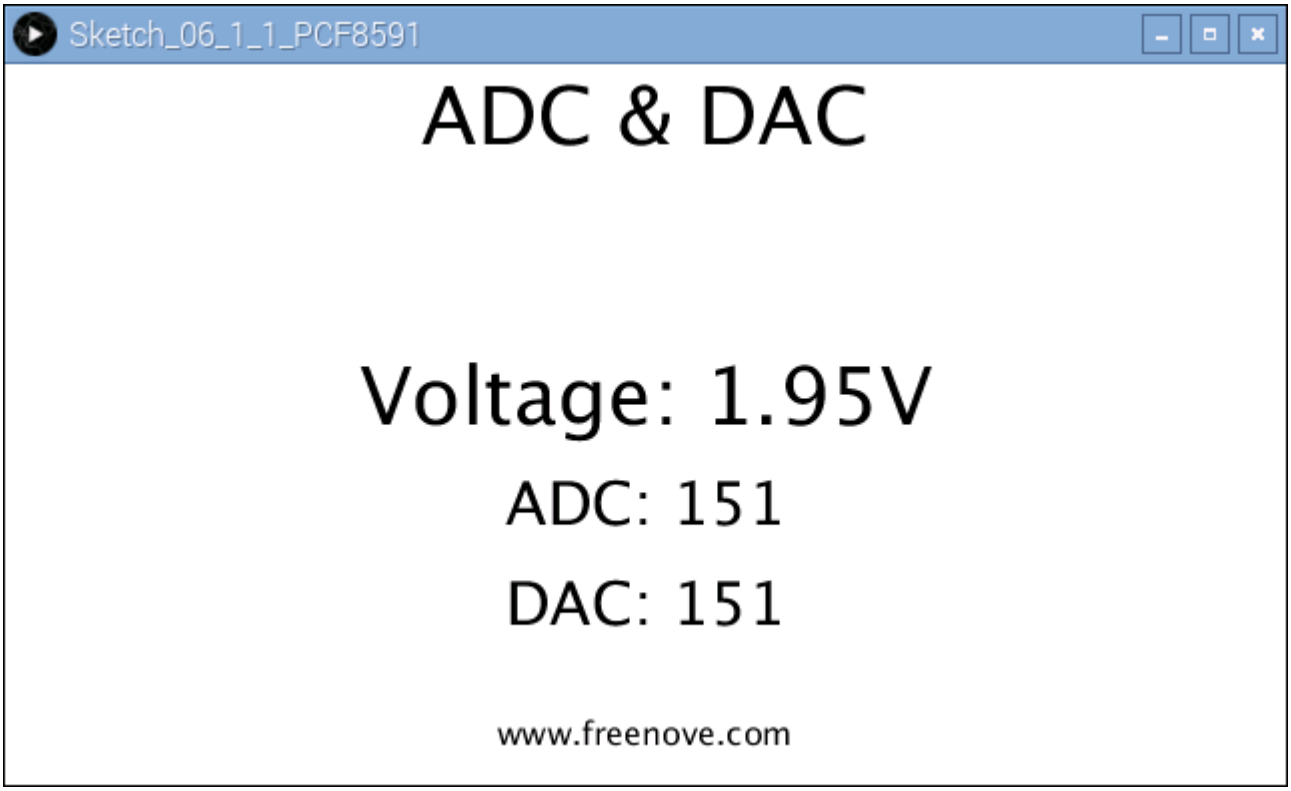

This project contains a lot of code files, and the core code is contained in the file Sketch_06_1_1_PCF8591. The other files only contain some custom classes.

The following is program code:

```
import processing.io.*;
//Create a object of class PCF8591
PCF8591 pcf = new PCF8591(0x48);
void setup() {
  size(640, 360);
}
void draw() {
  int adc = pcf.analogRead(0);    //Read the ADC value of channel 0
  float volt = adc*3.3/255.0;    //calculate the voltage
  pcf.analogWrite(adc);        //Write the DAC
  background(255);
  titleAndSiteInfo();

  fill(0);
  textAlign(CENTER);    //set the text centered
  textSize(30);
  text("ADC: "+nf(adc, 3, 0), width / 2, height/2+50);
  textSize(30);
  text("DAC: "+nf(adc, 3, 0), width / 2, height/2+100);
  textSize(40);        //set text size
  text("Voltage: "+nf(volt, 0, 2)+"V", width / 2, height/2);    //
}
void titleAndSiteInfo() {
  fill(0);
  textAlign(CENTER);    //set the text centered
  textSize(40);        //set text size
  text("ADC & DAC", width / 2, 40);    //title
  textSize(16);
  text("www.freenove.com", width / 2, height - 20);    //site
}
```

The project code mainly use PCF8591 class member function analogRead() and analogWrite() to read ADC and write DAC.

```
int adc = pcf.analogRead(0);     //Read the ADC value of channel 0
float volt = adc*3.3/255.0;     //calculate the voltage
pcf.analogWrite(adc);         //Write the DAC
```

About class PCF8591：

class PCF8591

This is a custom class that is used to operate the ADC and DAC of PCF8591.

`public PCF8591(int addr)`

Constructor, used to create a PCF8591 class object, parameters for the I2C PCF8591 device address.

`public int analogRead(int chn)`

Used to read ADC value of one channel of PCF8591, the parameter CHN indicates the channel number: 0,1,2,3.

`public byte[] analogRead()`

Read ADC values of all channels of PCF8591.

`public void analogWrite(int data)`

Write a DAC value to PCF8591.

Chapter 7 ADC & LED

We have found that when the voltage output by DAC is less than turn-on voltage of LED, it will not be turned on, before. In this chapter, we will combine ADC and PWM to control the brightness of LED.

Project 7.1 SoftLight

In this project, we will make a softlight, namely, using a potentiometer to control the brightness of LED.

Component List

Raspberry Pi 3B x1 GPIO Extension Board & Wire x1 BreadBoard x1		Jumper M/M x17 		
Rotary potentiometer x1 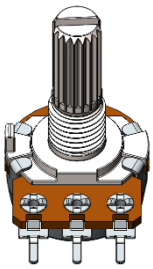	PCF8591 x1 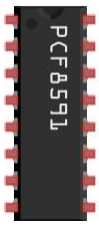	Resistor 10kΩ x2 	Resistor 220Ω x1 	LED x1

Circuit

The circuit of this experiment is similar to the one in the last chapter. The only difference is that the pin used to control LED is different.

Schematic diagram

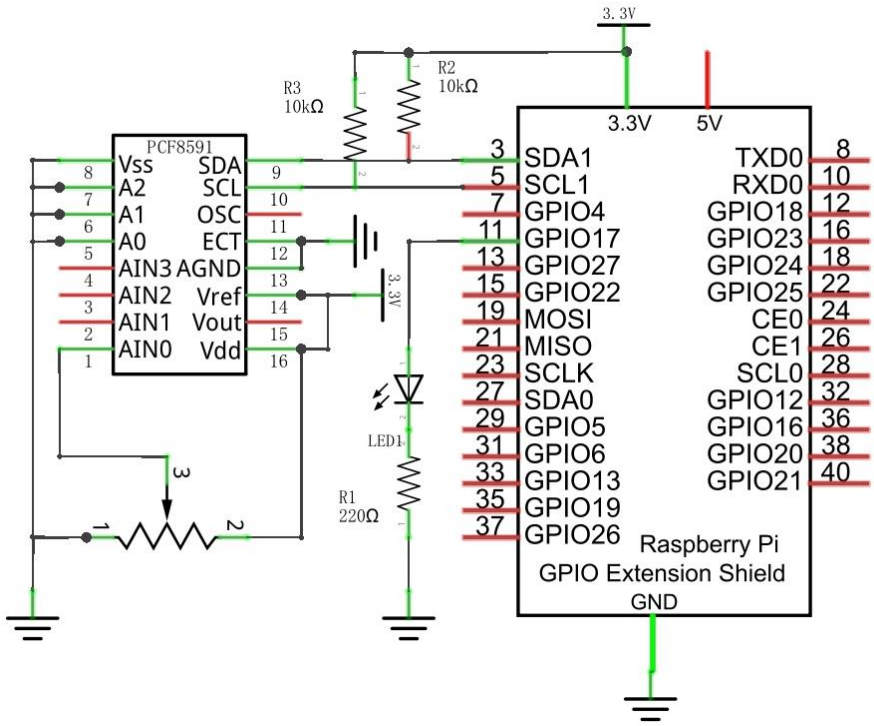

Hardware connection

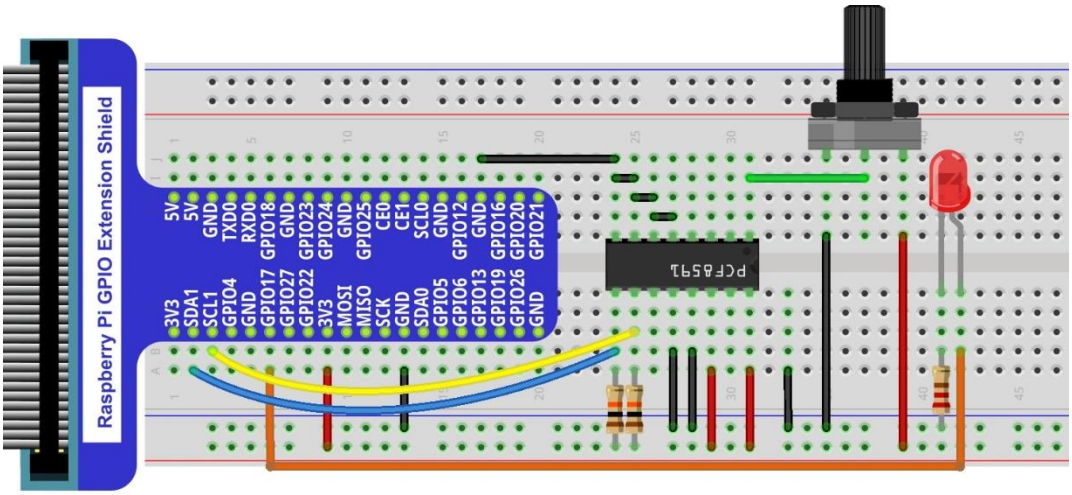

Sketch

Sketch 7.1.1 SoftLight

First observe the running result of the sketch, and then analyze the code.

1. Use Processing to open the file Sketch_07_1_1_SoftLight.

```
processing
Freenove_RFID_Starter_Kit_for_Raspberry_Pi/Processing/Sketchs/Sketch_07_1_1_SoftLight/Sketch_07_1_1_SoftLight.pde
```

2. Click on "RUN" to run the code.

After the program is executed, the Display Window will show the voltage value of potentiometer, the ADC value and a LED pattern. Rotate potentiometer to change the voltage value and the brightness of the LED.

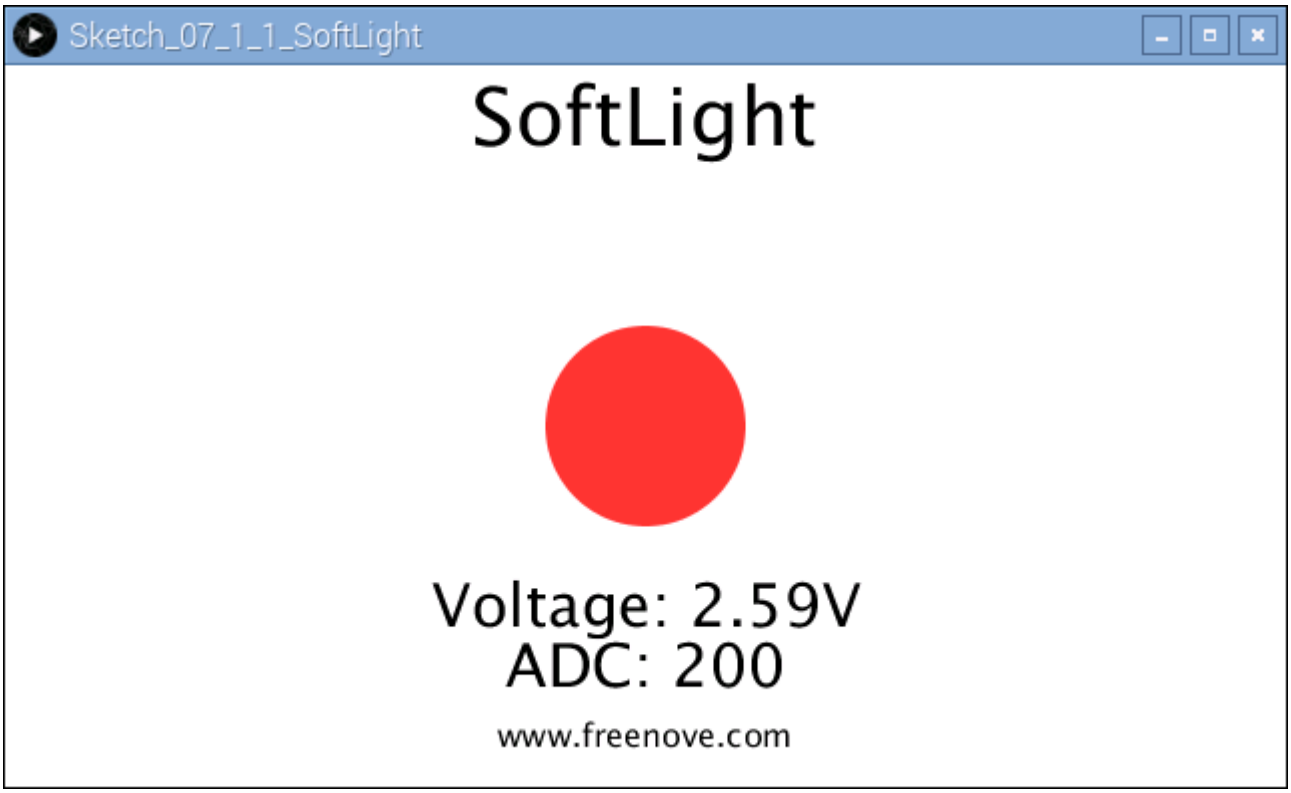

This project contains a lot of code files, and the core code is contained in the file Sketch_07_1_1_SoftLight. The other files only contain some custom classes.

The following is program code:

```
import processing.io.*;

int ledPin = 17;    //led
//Create a object of class PCF8591
PCF8591 pcf = new PCF8591(0x48);
SOFTPWM p = new SOFTPWM(ledPin, 0, 100);
void setup() {
  size(640, 360);
}
void draw() {
  int adc = pcf.analogRead(0);    //Read the ADC value of channel 0
  float volt = adc*3.3/255.0;    //calculate the voltage
  float dt = adc/255.0;
  p.softPwmWrite((int)(dt*100));  //output the pwm
  background(255);
  titleAndSiteInfo();

  fill(255, 255-dt*255, 255-dt*255);  //cycle
  noStroke();  //no border
  ellipse(width/2, height/2, 100, 100);

  fill(0);
  textAlign(CENTER);    //set the text centered
  textSize(30);
  text("ADC: "+nf(adc, 3, 0), width / 2, height/2+130);
  text("Voltage: "+nf(volt, 0, 2)+"V", width / 2, height/2+100);    //
}
void titleAndSiteInfo() {
  fill(0);
  textAlign(CENTER);    //set the text centered
  textSize(40);        //set text size
  text("SoftLight", width / 2, 40);    //title
  textSize(16);
  text("www.freenove.com", width / 2, height - 20);    //site
}
```

In this project code, get the ADC value of the potentiometer, then map it into the PWM duty cycle of LED to control its brightness. In Display Window, the color filled in LED pattern changes to simulate the brightness change of LED.

```
  int adc = pcf.analogRead(0);    //Read the ADC value of channel 0
  float volt = adc*3.3/255.0;    //calculate the voltage
  float dt = adc/255.0;
  p.softPwmWrite((int)(dt*100));  //output the pwm
```

Project 7.2 NightLamp

In this project, we will use Photoresistor, used to intense ambient light, to make a NightLamp. When the ambient light get dark, LED brightness wil be enhanced automatically. Conversely, the LED brightness will be weakened automatically.

Component List

Raspberry Pi 3B x1 GPIO Extension Board & Wire x1 BreadBoard x1		Jumper M/M x15 		
Photoresistor x1 	PCF8591 x1 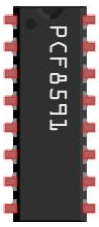	Resistor 10kΩ x3 	Resistor 220Ω x1 	LED x1

Circuit

The circuit of this experiment is similar to the one in last chapter. The only difference is that the input signal of the AIN0 pin of PCF8591 is changed from a potentiometer to combination of a photoresistor and a resistor.

Schematic diagram

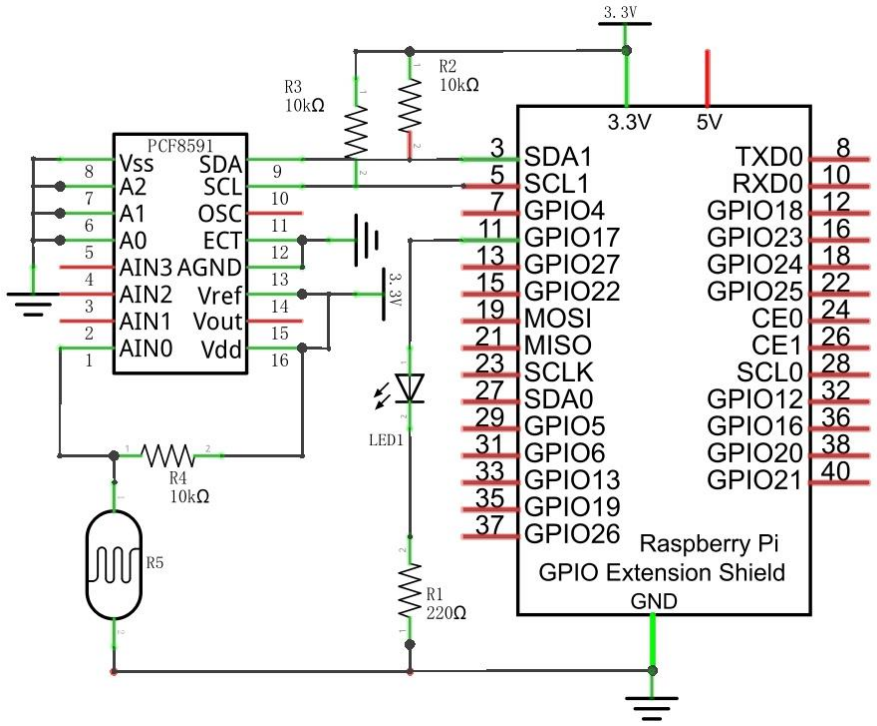

Hardware connection

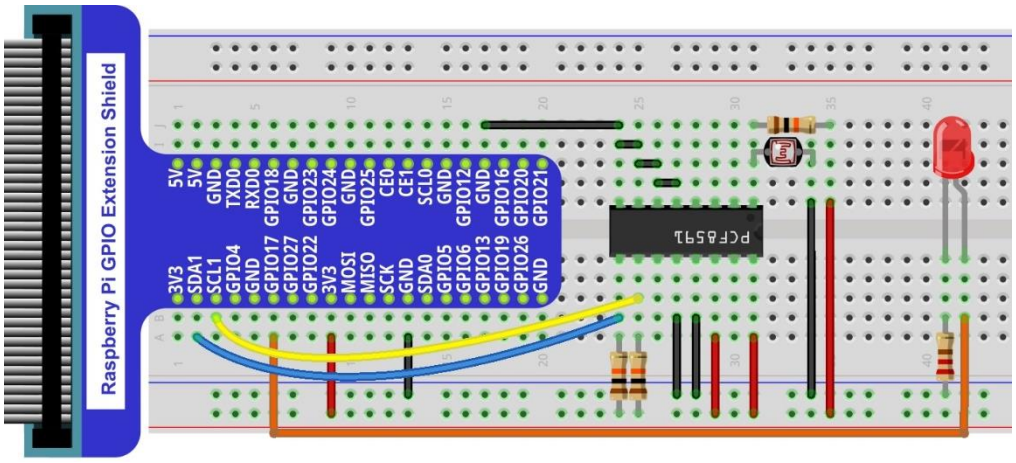

Sketch

The project code is the same as the last section "SoftLight" in addition to the title.

Chapter 8 Thermistor

In this chapter, we will learn how to use thermistor.

Project 8.1 Thermometer

In this project, we will use a thermistor to make a thermometer.

Component List

Raspberry Pi 3B x1 GPIO Extension Board & Wire x1 BreadBoard x1		Jumper M/M x14
Thermistor x1 	PCF8591 x1 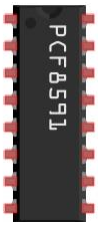	Resistor 10kΩ x3

Component knowledge

First Review the knowledge of thermistor. The relationship between resistance value and temperature of thermistor is:

Rt=R*EXP [B*(1/T2-1/T1)]

Where:

Rt is the thermistor resistance under T2 temperature;

R is in the nominal resistance of thermistor under T1 temperature;

EXP[n] is nth power of E;

B is for thermal index;

T1, T2 is Kelvin temperature (absolute temperature). Kelvin temperature=273.15+celsius temperature.

Parameters of the thermistor we use is: B=3950, R=10k, T1=25.

Circuit

The circuit of this experiment is similar to the one in the last chapter. The only difference is that the photoresistor is replaced by the thermistor.

Schematic diagram

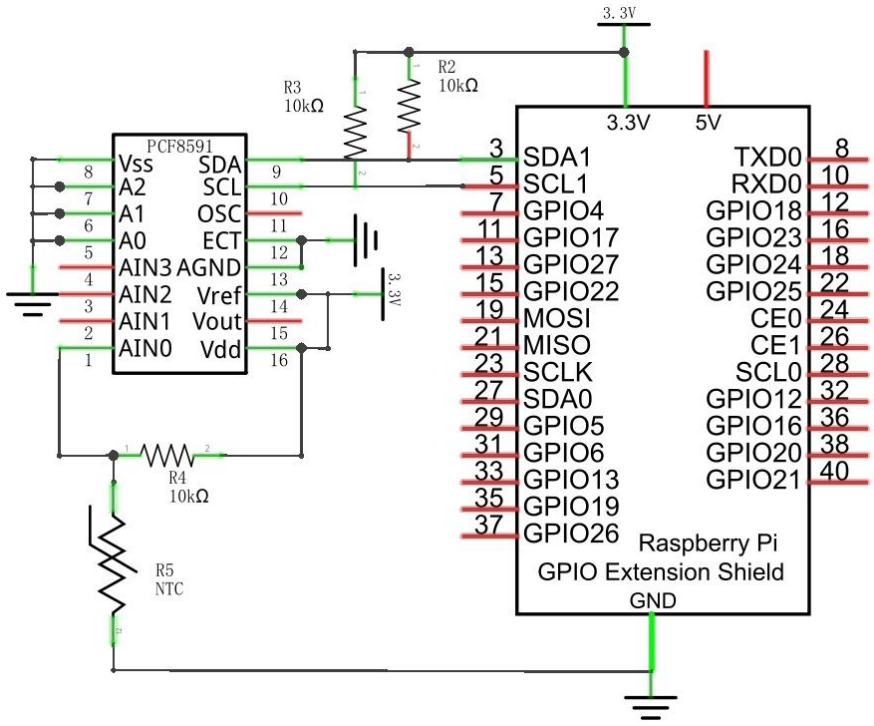

Hardware connection

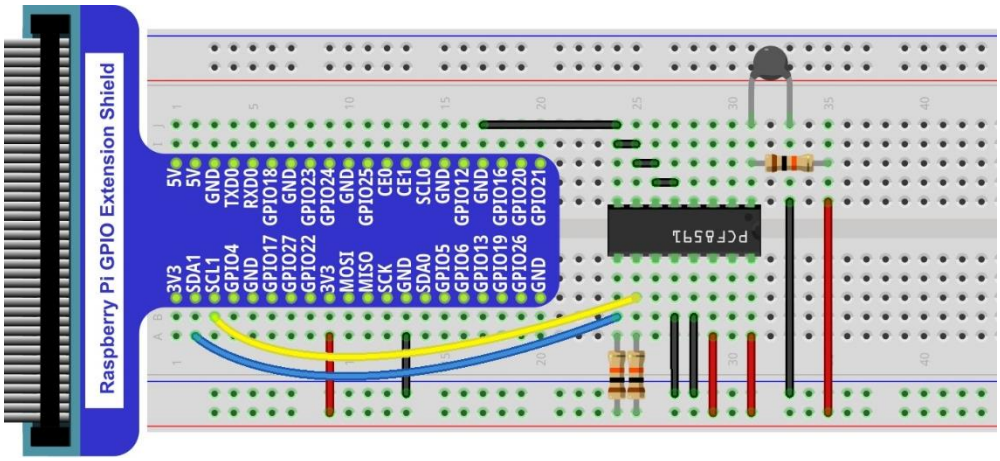

The formula for calculating temperature according to the circuit is shown below:

T2 = 1/(1/T1 + ln(Rt/R)/B)

Sketch

Sketch 8.1.1 Thermometer

First observe the running result of the sketch, and then analyze the code.

1. Use Processing to open the file Sketch_08_1_1_Thermometer.

```
processing
Freenove_RFID_Starter_Kit_for_Raspberry_Pi/Processing/Sketchs/Sketch_08_1_1_Thermometer/Sketch_08_1_1_Thermometer.pde
```

2. Click on "RUN" to run the code.

After the program is executed, the Display Window will show the current temperature, the ADC value and the voltage value.

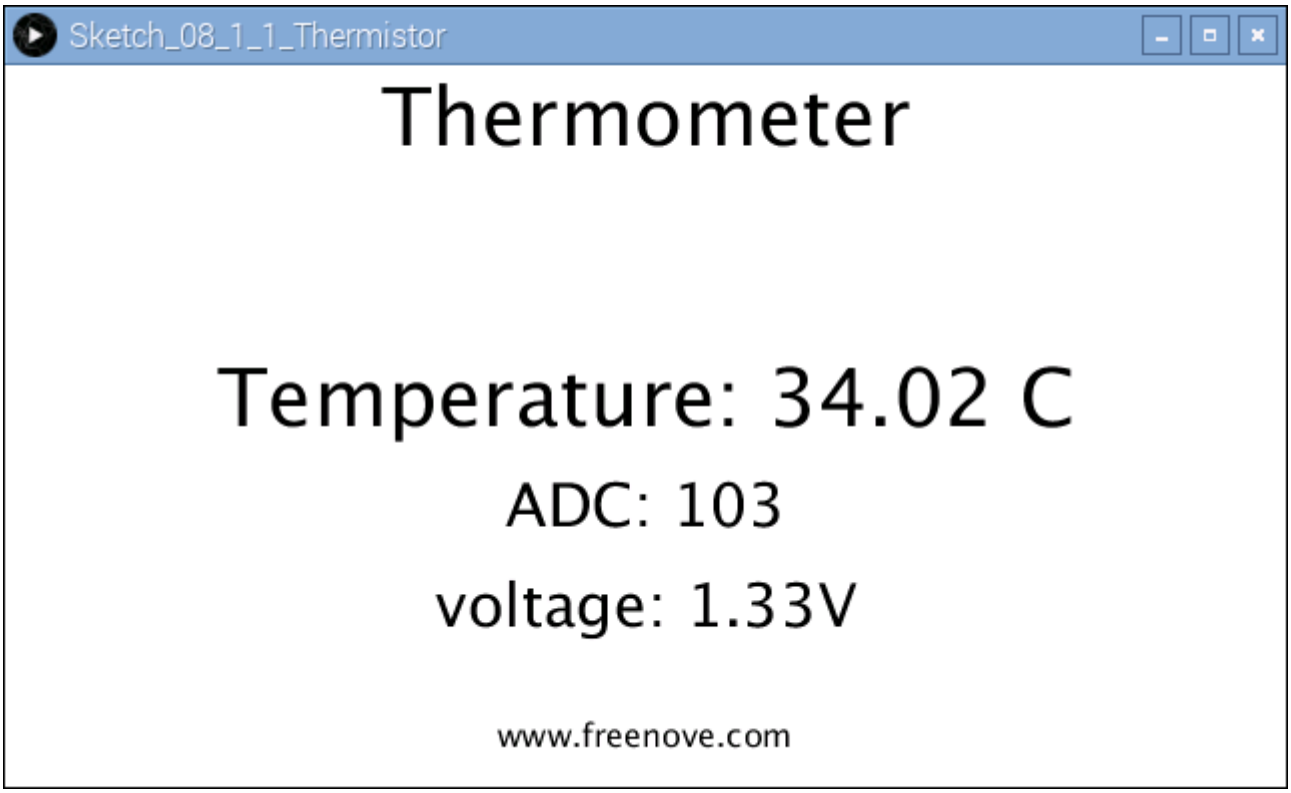

This project contains a lot of code files, and the core code is contained in the file Sketch_08_1_1_Thermometer. The other files only contain some custom classes.

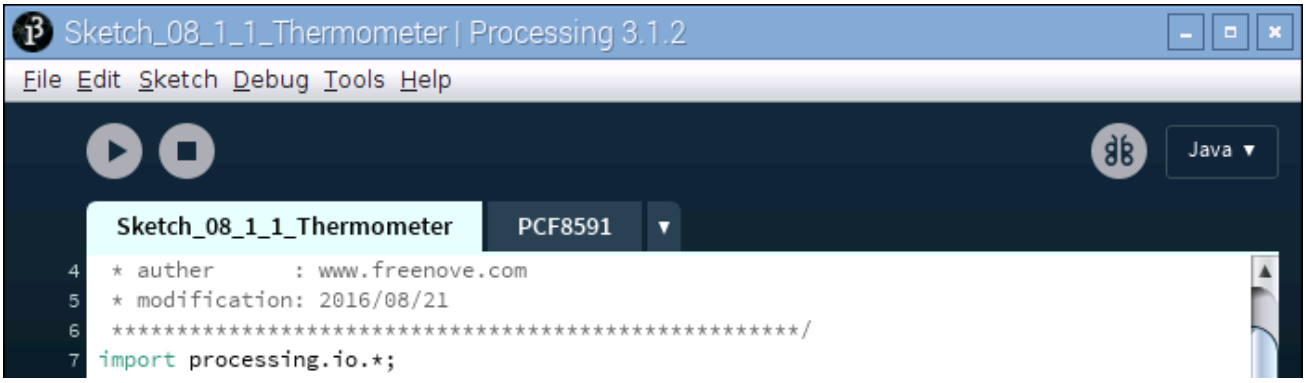

The following is program code:

```
import processing.io.*;
//Create a object of class PCF8591
PCF8591 pcf = new PCF8591(0x48);
void setup() {
  size(640, 360);
}
void draw() {
  int adc = pcf.analogRead(0);    //Read the ADC value of channel 0
  float volt = adc*3.3/255.0;    //calculate the voltage
  float tempK,tempC,Rt;        //
  Rt = 10*volt / (3.3-volt);    //calculate the resistance value of thermistor
  tempK = 1/(1/(273.15+25) + log(Rt/10)/3950);  //calaulate temperature(Kelvin)
  tempC = tempK - 273.15;    //calaulate temperature(Celsius)

  background(255);
  titleAndSiteInfo();

  fill(0);
  textAlign(CENTER);    //set the text centered
  textSize(30);
  text("ADC: "+nf(adc, 0, 0), width / 2, height/2+50);
  textSize(30);
  text("voltage: "+nf(volt, 0, 2)+"V", width / 2, height/2+100);
  textSize(40);        //set text size
  text("Temperature: "+nf(tempC, 0, 2)+" C", width / 2, height/2);    //
}
void titleAndSiteInfo() {
  fill(0);
  textAlign(CENTER);    //set the text centered
  textSize(40);        //set text size
  text("Thermometer", width / 2, 40);    //title
  textSize(16);
  text("www.freenove.com", width / 2, height - 20);    //site
}
```

In this project code, first read ADC, and then calculate the current temperature according to the Ohm's law and temperature formula mentioned before, finally display them on Display Window.

```
  int adc = pcf.analogRead(0);    //Read the ADC value of channel 0
  float volt = adc*3.3/255.0;    //calculate the voltage
  float tempK,tempC,Rt;        //
  Rt = 10*volt / (3.3-volt);    //calculate the resistance value of thermistor
  tempK = 1/(1/(273.15+25) + log(Rt/10)/3950);  //calaulate temperature(Kelvin)
  tempC = tempK - 273.15;    //calaulate temperature(Celsius)
```

Chapter 9 Motor & Driver

In this chapte, we will learn how to use DC motor, including how to control the speed and direction of the motor.

Project 9.1 Motor

In this project, we use L293D to drive the DC motor. We can click on the button in the Processing Display Window to control motor direction, and drag the progress bar to control the motor speed.

Component List

Raspberry Pi 3B x1 GPIO Extension Board & Wire x1 BreadBoard x1		Jumper M/M x22 		
Breadboard power module x1 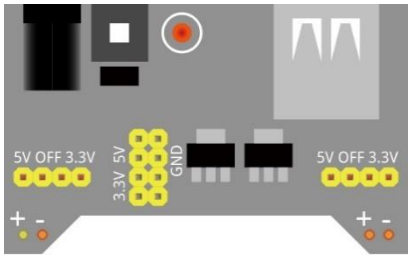		9V Battery (provided by yourself) & battery cable 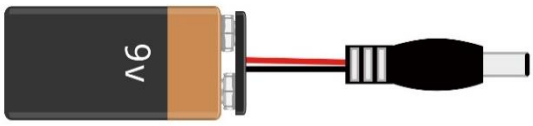		
Rotary potentiometer x1 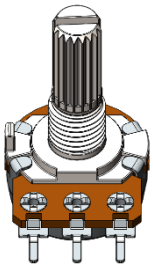	Motor x1 	Resistor 10kΩ x2 	PCF8591 x1 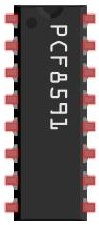	L293D 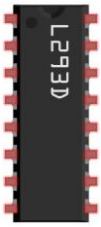

Circuit

When connecting the circuit, pay attention to that beacause the motor is a high-power component, do not use the power provided by the RPi, which may do damage to your RPi. the logic circuit can be powered by RPi power or external power supply which should have the common ground with RPi.

Schematic diagram

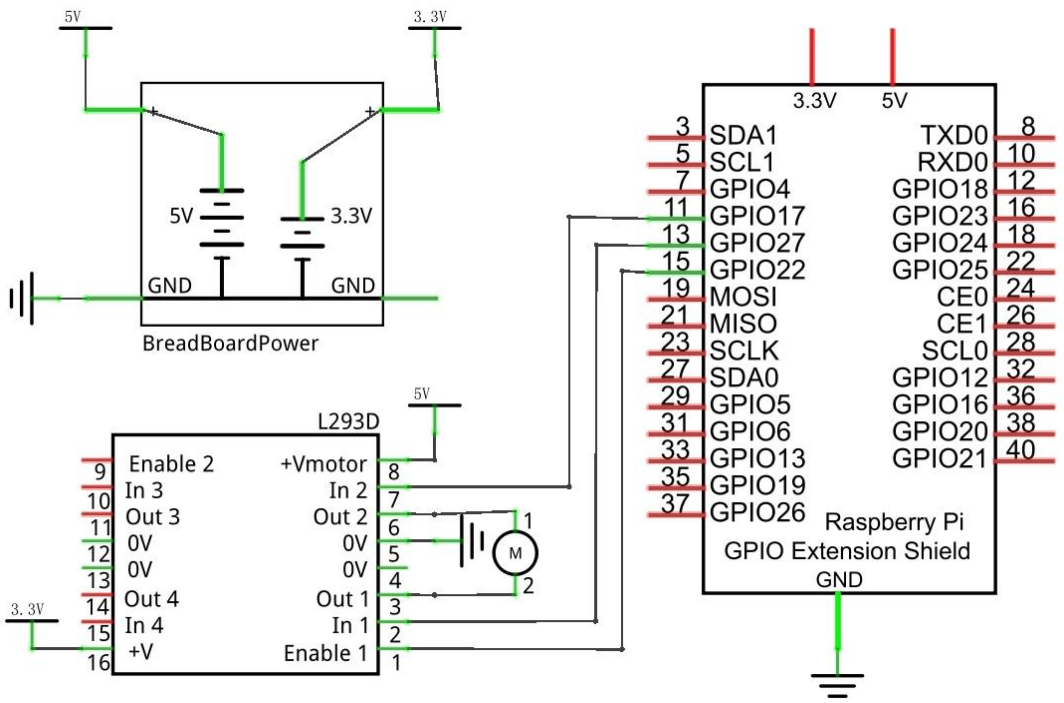

Hardware connection

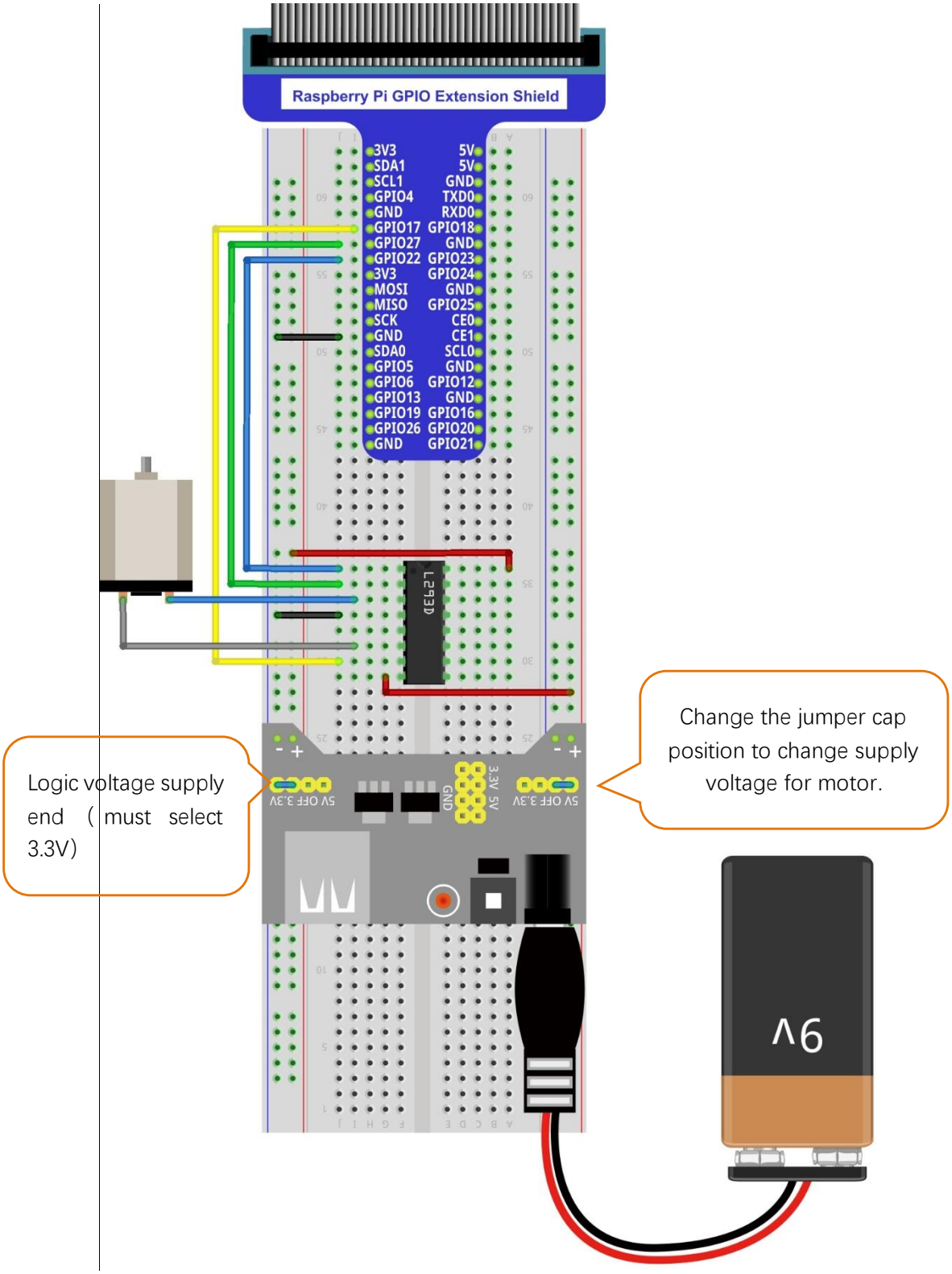

Sketch

Sketch 9.1.1 Motor

First observe the running result of the sketch, and then analyze the code.

1. Use Processing to open the file Sketch_09_1_1_Motor.

```
processing
Freenove_RFID_Starter_Kit_for_Raspberry_Pi/Processing/Sketchs/Sketch_09_1_1_Motor/Sketch_09_1_1_Motor.pde
```

2. Click on "RUN" to run the code.

After the program is executed, a virtual fan, a button and a progress bar are shown in Display Window. Dragging the progress bar can change the motor speed, and the virtual fan will rotate with differient speed accordingly. Clicking Button with mouse can change the motor rotation direction.

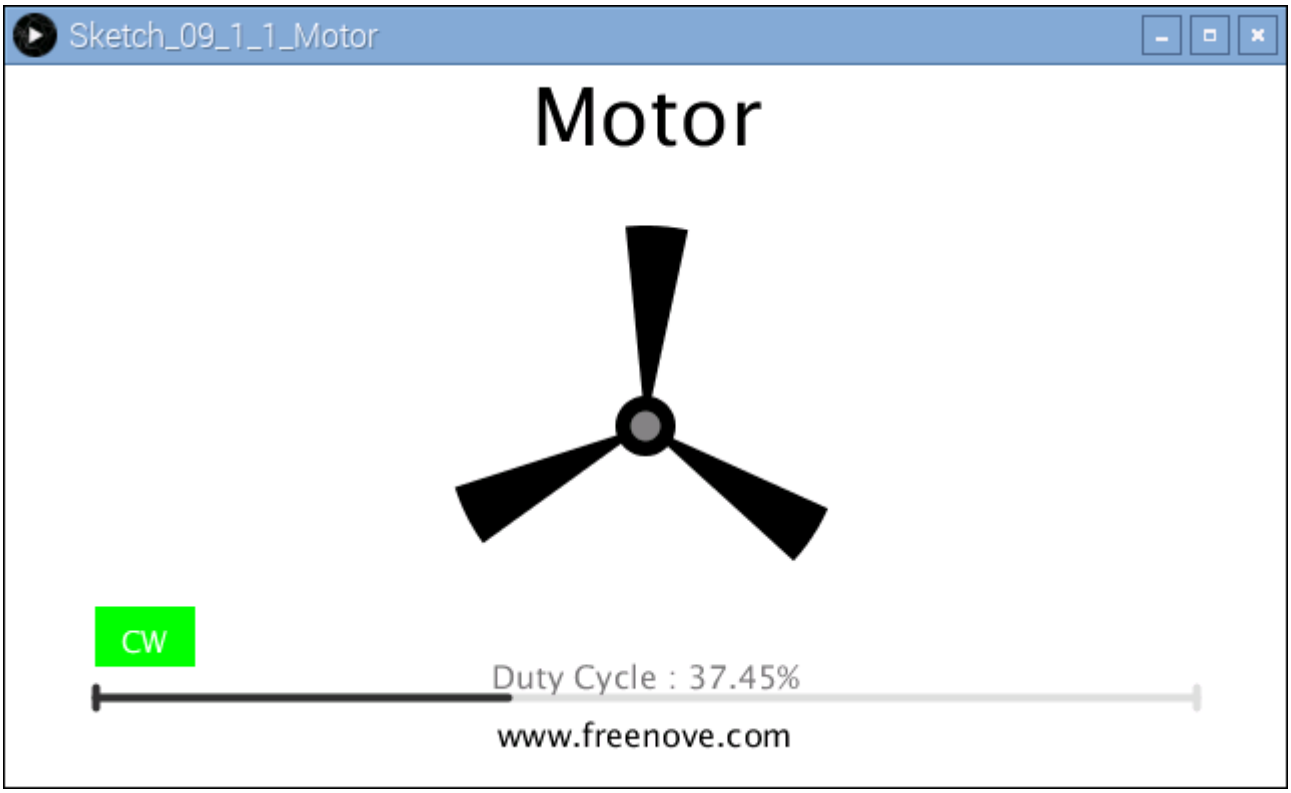

This project contains a lot of code files, and the core code is contained in the file Sketch_09_1_1_Motor. The other files only contain some custom classes.

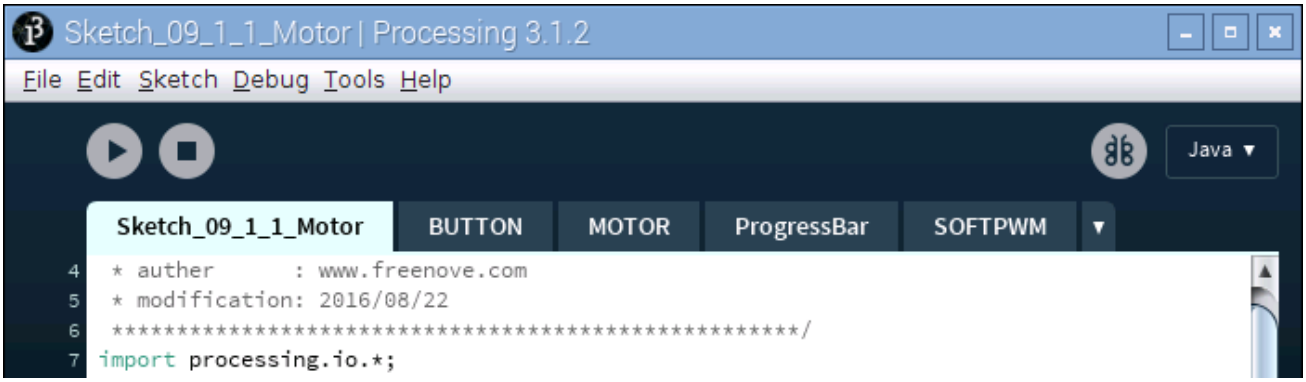

The following is program code:

```
import processing.io.*;

int motorPin1 = 17;    //connect to the L293D
int motorPin2 = 27;
int enablePin = 22;
final int borderSize = 45;    //border size
//MOTOR Object
MOTOR motor = new MOTOR(motorPin1, motorPin2, enablePin);
ProgressBar mBar;    //ProgressBar Object
boolean mMouse = false;    //determined whether a mouse click the ProgressBar
BUTTON btn;    //BUTTON Object, For controlling the direction of motor
int motorDir = motor.CW;    //motor direction
float rotaSpeed = 0, rotaPosition = 0;  //motor speed
void setup() {
  size(640, 360);
  mBar = new ProgressBar(borderSize, height-borderSize, width-borderSize*2);
  mBar.setTitle("Duty Cycle");    //set the ProgressBar's title
  btn = new BUTTON(45, height - 90, 50, 30);   //define the button
  btn.setBgColor(0, 255, 0);  //set button color
  btn.setText("CW");        //set button text
}

void draw() {
  background(255);
  titleAndSiteInfo();  //title and site information
  strokeWeight(4);    //border weight
  mBar.create();      //create the ProgressBar
  motor.start(motorDir, (int)(mBar.progress*100));  //control the motor starts to rotate
  btn.create();      //create the button
  rotaSpeed = mBar.progress * 0.02 * PI;  //virtual fan's rotating speed
  if (motorDir == motor.CW) {
    rotaPosition += rotaSpeed;
    if (rotaPosition >= 2*PI) {
      rotaPosition = 0;
    }
  } else {
    rotaPosition -= rotaSpeed;
    if (rotaPosition <= -2*PI) {
      rotaPosition = 0;
    }
  }
  drawFan(rotaPosition);    //show the virtual fan in Display window
```

```
}
//Draw a clover fan according to the stating angle
void drawFan(float angle) {
  constrain(angle, 0, 2*PI);
  fill(0);
  for (int i=0; i<3; i++) {
    arc(width/2, height/2, 200, 200, 2*i*PI/3+angle, (2*i+0.3)*PI/3+angle, PIE);
  }
  fill(0);
  ellipse(width/2, height/2, 30, 30);
  fill(128);
  ellipse(width/2, height/2, 15, 15);
}

void mousePressed() {
  if ( (mouseY< mBar.y+5) && (mouseY>mBar.y-5) ) {
    mMouse = true;    //the mouse click the progressBar
  } else if ((mouseY< btn.y+btn.h) && (mouseY>btn.y)
    && (mouseX< btn.x+btn.w) && (mouseX>btn.x)) { // the mouse click the button
    if (motorDir == motor.CW) {    //change the direction of rotation of motor
      motorDir = motor.CCW;
      btn.setBgColor(255, 0, 0);
      btn.setText("CCW");
    } else if (motorDir == motor.CCW) {
      motorDir = motor.CW;
      btn.setBgColor(0, 255, 0);
      btn.setText("CW");
    }
  }
}
void mouseReleased() {
  mMouse  = false;
}
void mouseDragged() {
  int a = constrain(mouseX, borderSize, width - borderSize);
  float t = map(a, borderSize, width - borderSize, 0.0, 1.0);
  if (mMouse) {
    mBar.setProgress(t);
  }
}
void titleAndSiteInfo() {
  fill(0);
  textAlign(CENTER);    //set the text centered
  textSize(40);        //set text size
```

```
  text("Motor", width / 2, 40);    //title
  textSize(16);
  text("www.freenove.com", width / 2, height - 20);    //site
}
```

First define the GPIO pin connected to the Motor, motor class object, the L293D class object, the ProgressBar class object, the Button class object, and some variables.

```
int motorPin1 = 17;    //connect to the L293D
int motorPin2 = 27;
int enablePin = 22;
final int borderSize = 45;    //border size
//MOTOR Object
MOTOR motor = new MOTOR(motorPin1, motorPin2, enablePin);
ProgressBar mBar;    //ProgressBar Object
boolean mMouse = false;    //determined whether a mouse click the ProgressBar
BUTTON btn;    //BUTTON Object, For controlling the direction of motor
int motorDir = motor.CW;    //motor direction
float rotaSpeed = 0, rotaPosition = 0;  //motor speed
```

Initialize the ProgressBar and Button in setup().

```
  mBar = new ProgressBar(borderSize, height-borderSize, width-borderSize*2);
  mBar.setTitle("Duty Cycle");    //set the ProgressBar's title
  btn = new BUTTON(45, height - 90, 50, 30);    //define the button
  btn.setBgColor(0, 255, 0);  //set button color
  btn.setText("CW");        //set button text
```

In function draw(), draw all the contents to be displayed. Then set the motor speed, as well as the speed of virtual fan according to the progress of progress bar. And set the motor direction according to the button flag.

```
void draw() {
  background(255);
  titleAndSiteInfo();  //title and site information
  strokeWeight(4);    //border weight
  mBar.create();      //create the ProgressBar
  motor.start(motorDir, (int)(mBar.progress*100));  //control the motor starts to rotate
  btn.create();      //create the button
  rotaSpeed = mBar.progress * 0.02 * PI;  //virtual fan's rotating speed
  if (motorDir == motor.CW) {
    rotaPosition += rotaSpeed;
    if (rotaPosition >= 2*PI) {
      rotaPosition = 0;
    }
  } else {
    rotaPosition -= rotaSpeed;
```

```
    if (rotaPosition <= -2*PI) {
      rotaPosition = 0;
    }
  }
  drawFan(rotaPosition);    //show the virtual fan in Display window
}
```

In the mousePressed(), judge if the Button is clicked on. If the mouse clicked on the Button, then change the motor direction and the text and color of Button. We have learned how to drag ProgressBarBar before, so here is no representation.

```
else if ((mouseY< btn.y+btn.h) && (mouseY>btn.y)
    && (mouseX< btn.x+btn.w) && (mouseX>btn.x)) { // the mouse click the button
    if (motorDir == motor.CW) {    //change the direction of rotation of motor
      motorDir = motor.CCW;
      btn.setBgColor(255, 0, 0);
      btn.setText("CCW");
    } else if (motorDir == motor.CCW) {
      motorDir = motor.CW;
      btn.setBgColor(0, 255, 0);
      btn.setText("CW");
    }
```

Subfunction drawFan(float angle) is used to draw a three leaf fan, based on an initial angle angle. And the angle between each two leaf is 120°. Changing the value of "angle" can make the fan rotate to different angle.

```
void drawFan(float angle) {
  constrain(angle, 0, 2*PI);
  fill(0);
  for (int i=0; i<3; i++) {
    arc(width/2, height/2, 200, 200, 2*i*PI/3+angle, (2*i+0.3)*PI/3+angle, PIE);
  }
  fill(0);
  ellipse(width/2, height/2, 30, 30);
  fill(128);
  ellipse(width/2, height/2, 15, 15);
}
```

About class MOTOR：

class MOTOR

This is a custom class that is used to operate the motor controlled by L293D.

`public MOTOR(int pin1, int pin2, int enablePin)`

Constructor, the parameter for the GPIO connected to the L293D pin, the enablePin used to create a PWM pin within range of 0-100 and with frequency of 100Hz.

`public void start(int dir, int speed)`

Used to drive motor, parameter dir for the rotation direction, the value is CW, CCW, STOP. Parameter speed

is used to decide the duty cycle of PWM. Its value is within range of 0-100.

About class BUTTON：

class BUTTON

This is a custom class that is used to creat a Button.

```
public BUTTON(int ix, int iy, int iw, int ih)
```

Constructor, used to create a BUTTON class object. The parameters is for the location and size of the button to be created.

```
public void create()
```

Used to draw Button.

```
public void setBgColor(int ir, int ig, int ib)
```

Used to set Button color.

```
public void setText(String str)
```

Used to set Button text.

```
public void setTextColor(int ir, int ig, int ib)
```

Used to set text color.

Chapter 10 74HC595 & LEDBar Graph

In this chapter, we will learn how to use 74HC595, and use it to control Graph LEDBar.

Project 10.1 FollowLight

In this chapter, we will use 74HC595 and LEDBar Graph to recreate a FollowLight.

Component List

Raspberry Pi 3B x1 GPIO Extension Board & Wire x1 BreadBoard x1		Jumper M/M x17
74HC595 x1 	LEDBar Graph x1 	Resistor 220Ω x8

Circuit

Schematic diagram

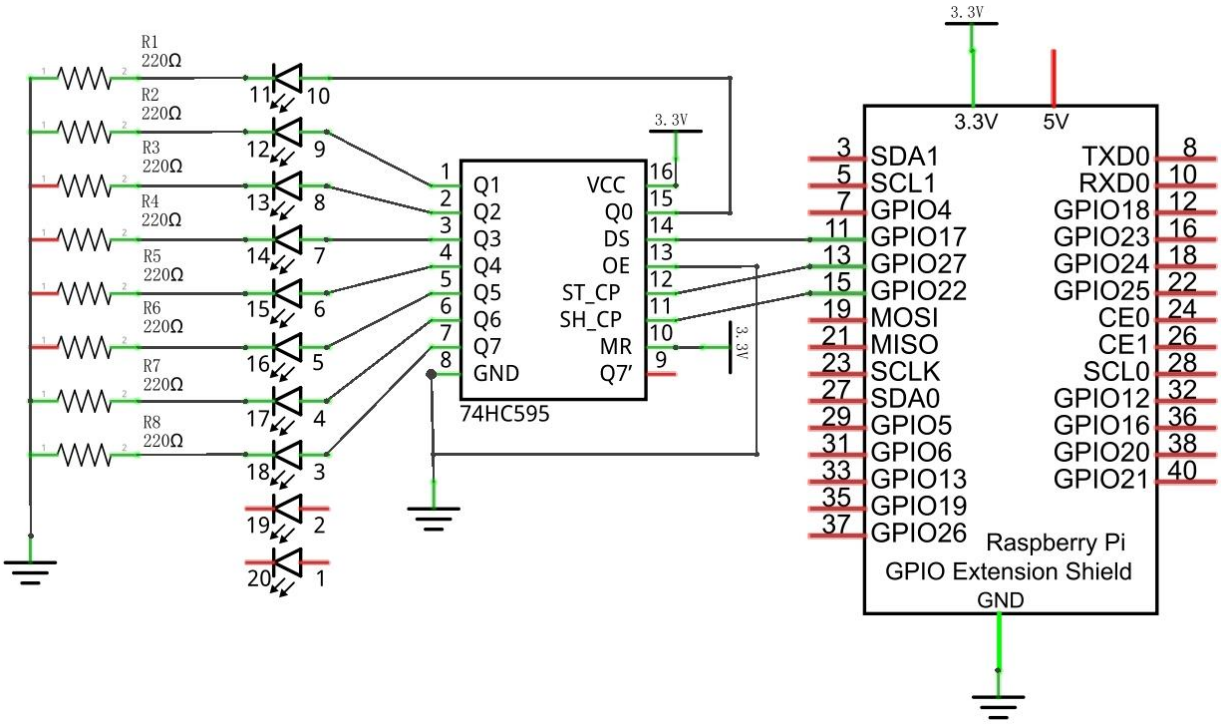

Hardware connection

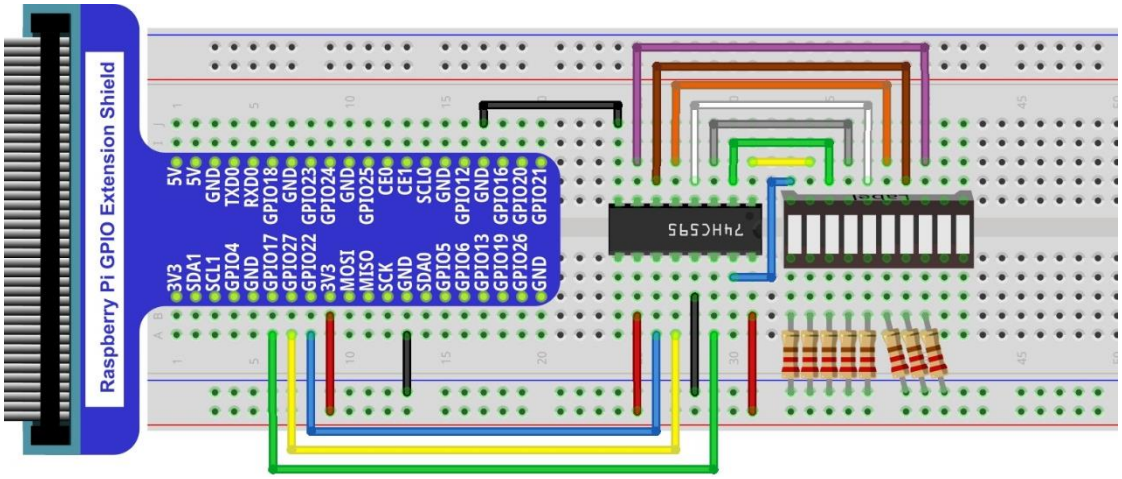

Sketch

Sketch 10.1.1 LightWater

First observe the running result of the sketch, and then analyze the code.

1. Use Processing to open the file Sketch_10_1_1_LightWater.

```
processing
Freenove_RFID_Starter_Kit_for_Raspberry_Pi/Processing/Sketchs/Sketch_10_1_1_LightWater/Sketch_10_1_1_LightWater.pde
```

2. Click on "RUN" to run the code.

After the program is executed, Display Window shows a virtual LEDBar Graph, which will bright at the same rate and same way with LEDBar Graph in the circui. Dragging the progress bar can adjust the flow rate of light water.

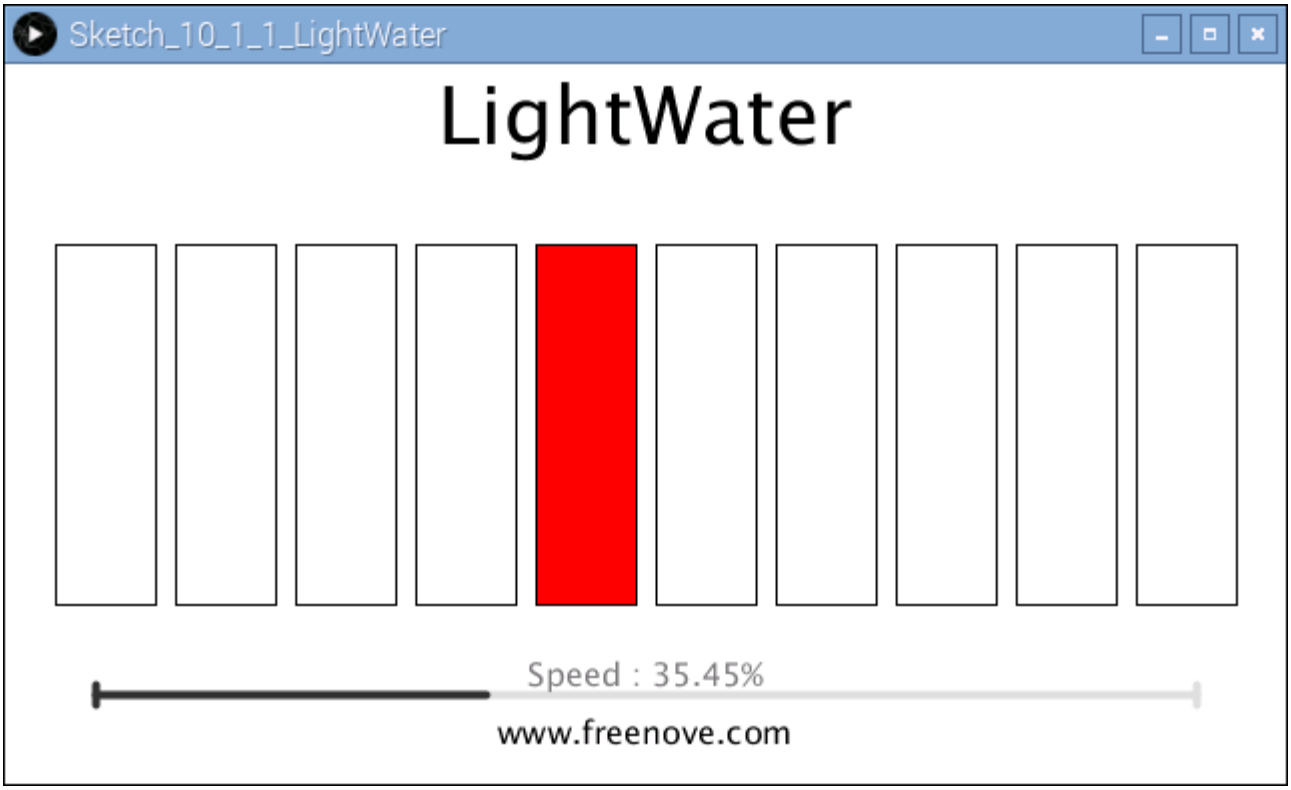

This project contains a lot of code files, and the core code is contained in the file Sketch_10_1_1_LightWater. The other files only contain some custom classes.

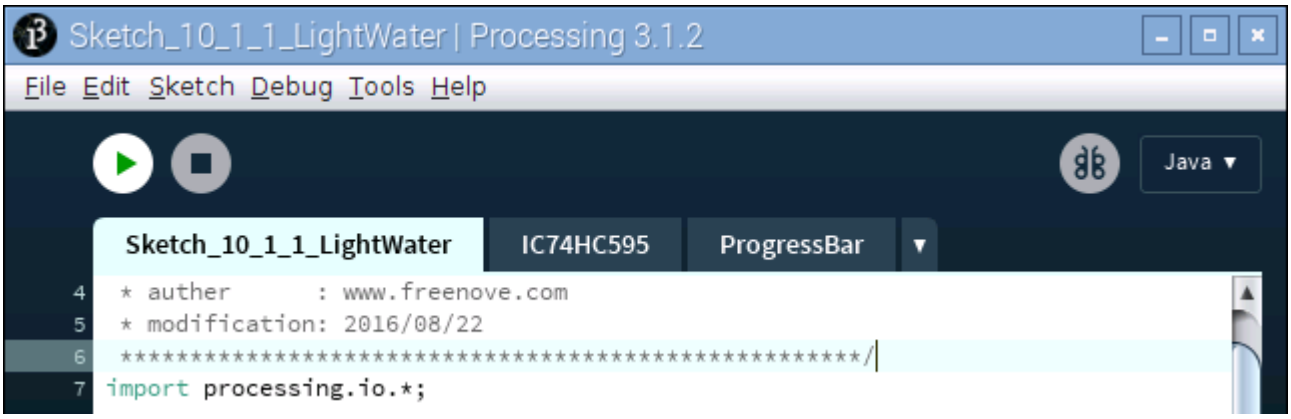

The following is program code:

```
import processing.io.*;

int dataPin = 17;    //connect to the 74HC595
int latchPin = 27;
int clockPin = 22;
final int borderSize = 45;    //border size
ProgressBar mBar;    //ProgressBar Object
IC74HC595 ic;      //IC74HC595 Object
boolean mMouse = false;    //determined whether a mouse click the ProgressBar
int leds = 0x01;           //number of led on
int lastMoveTime = 0;      //led last move time point
void setup() {
  size(640, 360);
  mBar = new ProgressBar(borderSize, height-borderSize, width-borderSize*2);
  mBar.setTitle("Speed");    //set the ProgressBar's title
  ic = new IC74HC595(dataPin, latchPin, clockPin);
}

void draw() {
  background(255);
  titleAndSiteInfo();  //title and site information
  strokeWeight(4);    //border weight
  mBar.create();      //create the ProgressBar
  //control the speed of lightwater
  if (millis() - lastMoveTime > 50/(0.05+mBar.progress)) {
    lastMoveTime = millis();
    leds<<=1;
    if (leds == 0x100)
      leds = 0x01;
  }
  ic.write(ic.LSBFIRST, leds);    //write 74HC595

  stroke(0);
```

```
  strokeWeight(1);
  for (int i=0; i<10; i++) {    //draw 10 rectanglar box
    if (leds == (1<<i)) {    //
      fill(255, 0, 0);        //fill the rectanglar box in red color
    } else {
      fill(255, 255, 255);  //else fill the rectanglar box in white color
    }
    rect(25+60*i, 90, 50, 180);    //draw a rectanglar box
  }
}

void mousePressed() {
  if ( (mouseY< mBar.y+5) && (mouseY>mBar.y-5) ) {
    mMouse = true;    //the mouse click the progressBar
  }
}
void mouseReleased() {
  mMouse  = false;
}
void mouseDragged() {
  int a = constrain(mouseX, borderSize, width - borderSize);
  float t = map(a, borderSize, width - borderSize, 0.0, 1.0);
  if (mMouse) {
    mBar.setProgress(t);
  }
}
void titleAndSiteInfo() {
  fill(0);
  textAlign(CENTER);    //set the text centered
  textSize(40);        //set text size
  text("LightWater", width / 2, 40);    //title
  textSize(16);
  text("www.freenove.com", width / 2, height - 20);    //site
}
```

First define the GPIO pin connected to 74HC595, the ProgressBar class object, IC74HC595 class object, and some variables.

```
int dataPin = 17;    //connect to the 74HC595
int latchPin = 27;
int clockPin = 22;
final int borderSize = 45;    //border size
ProgressBar mBar;    //ProgressBar Object
IC74HC595 ic;      //IC74HC595 Object
boolean mMouse = false;    //determined whether a mouse click the ProgressBar
```

```
int leds = 0x01;            //number of led on
int lastMoveTime = 0;       //led last move time point
```

In the function setup(), instantiate ProgressBar class object and IC74HC595 class object.

```
  mBar = new ProgressBar(borderSize, height-borderSize, width-borderSize*2);
  mBar.setTitle("Speed");    //set the ProgressBar's title
  ic = new IC74HC595(dataPin, latchPin, clockPin);
```

In the function draw(), set the background, text, and other information and draw the progress bar.

```
  background(255);
  titleAndSiteInfo();  //title and site information
  strokeWeight(4);    //border weight
  mBar.create();      //create the ProgressBar
```

Then according to the speed of followlight, calculate the data "leds" for 74HC595, and make it written to 74HC595, then LEDBar Graph is turned on.

```
  if (millis() - lastMoveTime > 50/(0.05+mBar.progress)) {
    lastMoveTime = millis();
    leds<<=1;
    if (leds == 0x100)
      leds = 0x01;
  }
  ic.write(ic.LSBFIRST, leds);    //write 74HC595
```

Finally, according to the variable leds, draw the virtual LEDBar Graph in Display Window.

```
  stroke(0);
  strokeWeight(1);
  for (int i=0; i<10; i++) {    //draw 10 rectanglar box
    if (leds == (1<<i)) {    //
      fill(255, 0, 0);        //fill the rectanglar box in red color
    } else {
      fill(255, 255, 255);  //else fill the rectanglar box in white color
    }
    rect(25+60*i, 90, 50, 180);    //draw a rectanglar box
  }
```

About class IC74HC595：

class IC74HC595

This is a custom class that is used to operate integrated circuit 74HC595.

`public IC74HC595(int dPin, int lPin, int cPin)`

Constructor, the parameter for the GPIO pin connected to 74HC595.

`public void write(int order,int value)`

Used to write data to 74HC595, and the 74HC595 output port will output these data immediately.

Chapter 11 74HC595 & Seven-segment display.

In this chapter, we will learn a new component, Seven-segment display (SSD).

Project 11.1 Seven -segment display.

We will use 74HC595 to control Seven-segment display (SSD). And make it display decimal character "0-9".

Component List

Raspberry Pi 3B x1 GPIO Extension Board & Wire x1 BreadBoard x1		Jumper M/M x18
74HC595 x1 	7-segment display x1 	Resistor 220Ω x8

Circuit

Schematic diagram

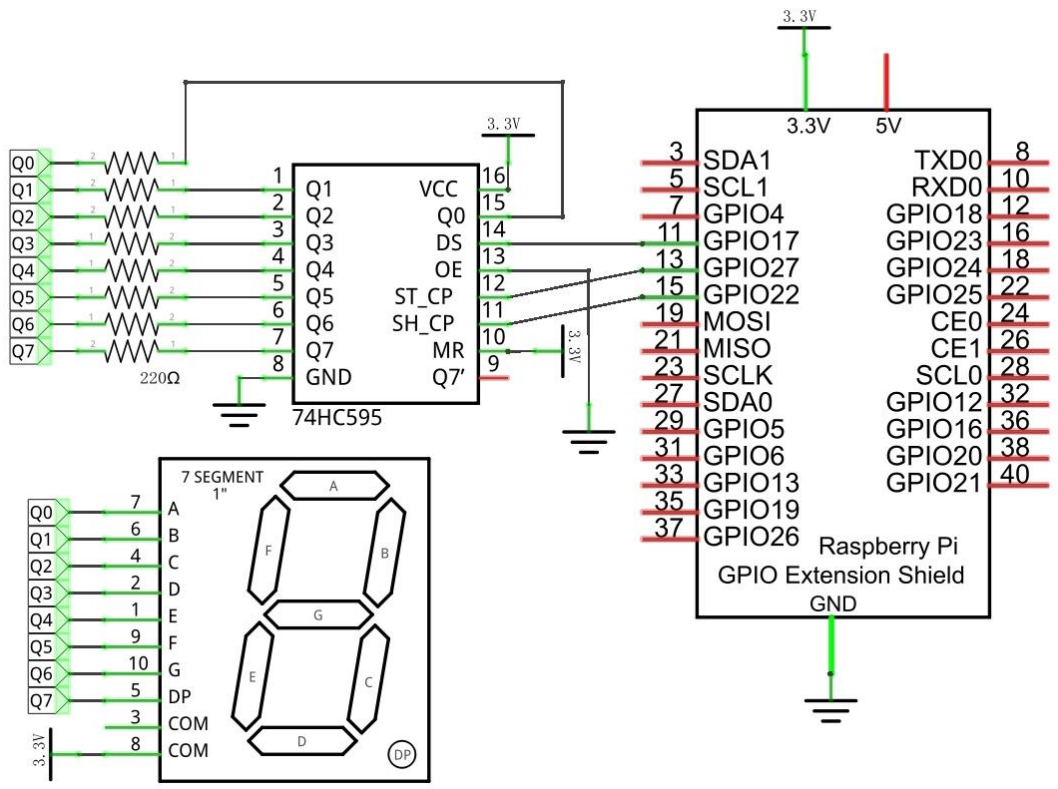

Hardware connection

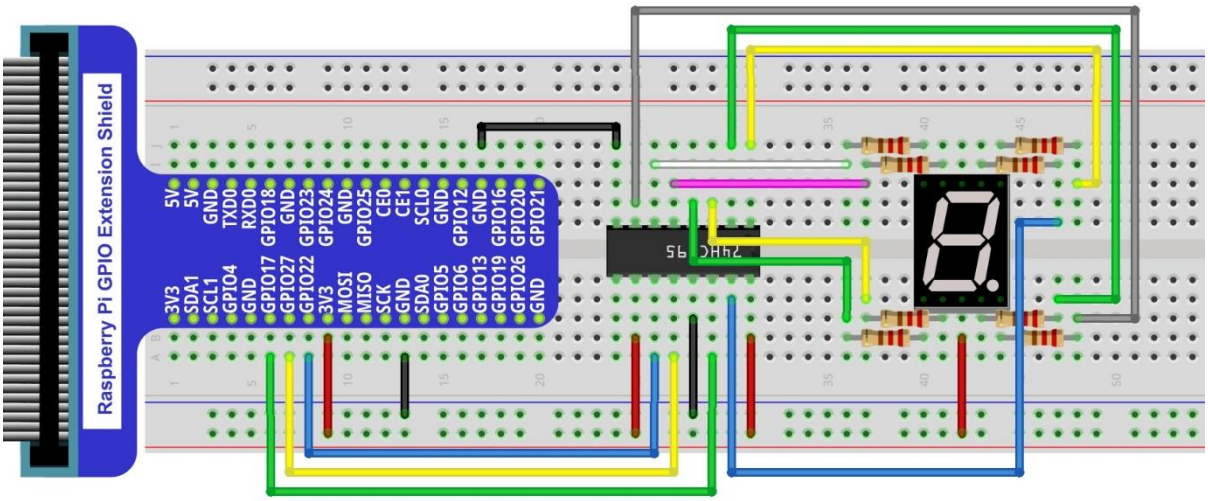

Sketch

Sketch 11.1.1 SSD

First observe the running result of the sketch, and then analyze the code.

1. Use Processing to open the file Sketch_11_1_1_SSD.

```
processing
Freenove_RFID_Starter_Kit_for_Raspberry_Pi/Processing/Sketchs/Sketch_11_1_1_SSD/Sketch_11_1_1_SSD.pde
```

2. Click on "RUN" to run the code.

After the program is executed, both Display Window and SSD in the circuit show the same number. And they have the same add-self rate to display number "0-9" constantly. Dragging the progress bar can adjust the add-self rate.

This project contains a lot of code files, and the core code is contained in the file Sketch_11_1_1_SSD. The other files only contain some custom classes.

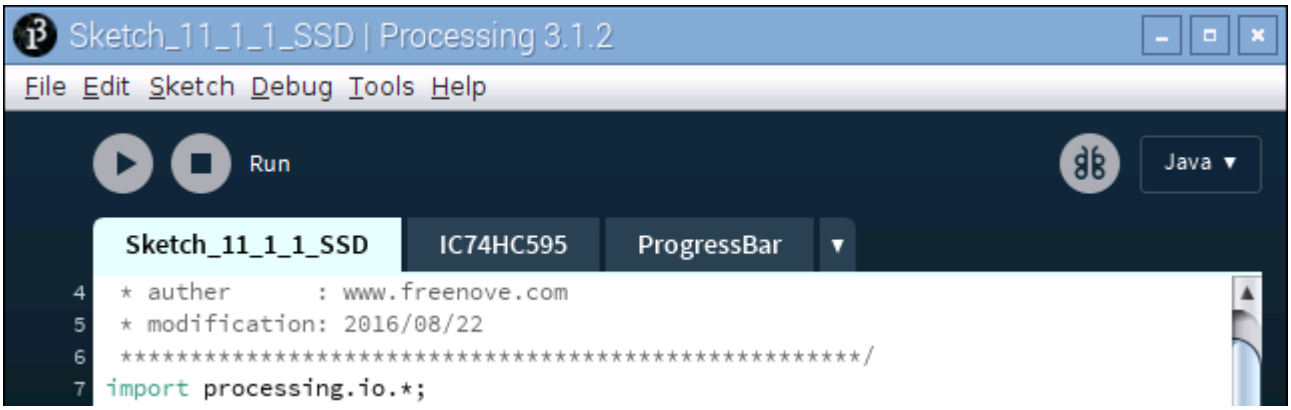

The following is program code:

```
import processing.io.*;

int dataPin = 17;    //connect to the 74HC595
int latchPin = 27;
int clockPin = 22;
final int borderSize = 45;    //border size
ProgressBar mBar;    //ProgressBar Object
IC74HC595 ic;      //IC74HC595 Object
boolean mMouse = false;    //determined whether a mouse click the ProgressBar
int index = 0;           // index of number
int lastMoveTime = 0;      //led last move time point
//encoding for character 0-9 of common anode SevenSegmentDisplay
final int[] numCode = {0xc0, 0xf9, 0xa4, 0xb0, 0x99, 0x92, 0x82, 0xf8, 0x80, 0x90};
PFont mFont;

void setup() {
  size(640, 360);
  mBar = new ProgressBar(borderSize, height-borderSize, width-borderSize*2);
  mBar.setTitle("Speed");    //set the ProgressBar's title
  ic = new IC74HC595(dataPin, latchPin, clockPin);
  mFont = loadFont("DigifaceWide-100.vlw");  //create DigifaceWide font
}

void draw() {
  background(255);
  titleAndSiteInfo();  //title and site information
  strokeWeight(4);    //border weight
  mBar.create();      //create the ProgressBar
  //control the speed of number change
  if (millis() - lastMoveTime > 50/(0.05+mBar.progress)) {
    lastMoveTime = millis();
    index++;
    if (index > 9) {
      index = 0;
    }
  }
  ic.write(ic.MSBFIRST, numCode[index]);    //write 74HC595
  showNum(index);    //show the number in dispaly window
}
void showNum(int num) {
  fill(0);
  textSize(100);
  textFont(mFont);    //digiface font
```

```
  textAlign(CENTER, CENTER);
  text(num, width/2, height/2);
}
void mousePressed() {
  if ( (mouseY< mBar.y+5) && (mouseY>mBar.y-5) ) {
    mMouse = true;    //the mouse click the progressBar
  }
}
void mouseReleased() {
  mMouse  = false;
}
void mouseDragged() {
  int a = constrain(mouseX, borderSize, width - borderSize);
  float t = map(a, borderSize, width - borderSize, 0.0, 1.0);
  if (mMouse) {
    mBar.setProgress(t);
  }
}
void titleAndSiteInfo() {
  fill(0);
  textAlign(CENTER);    //set the text centered
  textFont(createFont("", 100));  //default font
  textSize(40);        //set text size
  text("Seven-segment Display", width / 2, 40);    //title
  textSize(16);
  text("www.freenove.com", width / 2, height - 20);    //site
}
```

The project code is similar to the last chapter. The difference is that in this project the data output by 74HC595 is the fixed coding information of SSD. First, the character "0-9" is defined as code of common anode SSD.

```
final int[] numCode = {0xc0, 0xf9, 0xa4, 0xb0, 0x99, 0x92, 0x82, 0xf8, 0x80, 0x90};
```

In the function draw(), the data is output at a certain speed. At the same time the Display Window outputs the same character.

```
  if (millis() - lastMoveTime > 50/(0.05+mBar.progress)) {
    lastMoveTime = millis();
    index++;
    if (index > 9) {
      index = 0;
    }
  }
  ic.write(ic.MSBFIRST, numCode[index]);    //write 74HC595
  showNum(index);    //show the number in dispaly window
```

By creating the font "mFont", we change the font of the characters in Display Window. The font ".vlw" file is created by clicking the "Create Font" of the menu bar, which is saved in the data folder of current Sketch.

```
PFont mFont;
……
mFont = loadFont("DigifaceWide-100.vlw");  //create DigifaceWide font
```

About more details about loadFont(), please refer to "Help→Reference→loadFont()" or the official website: https://processing.org/reference/loadFont_.html

By creating an empty font, you can reset the font to default font.

```
textFont(createFont("", 100));  //default font
```

Project 11.2 4-digit Seven-segment display.

Now, let's learn to use 4-digit 7-segment display(FDSSD).

Component List

Raspberry Pi 3B x1 GPIO Expansion Board & Wire x1 BreadBoard x1			Jumper M/M x27 	
74HC595 x1 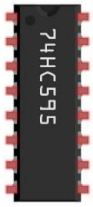	PNP transistor x4 	4-Digit 7-segment display x1 	Resistor 220Ω x8 	Resistor 1KΩ x4

Circuit

Schematic diagram

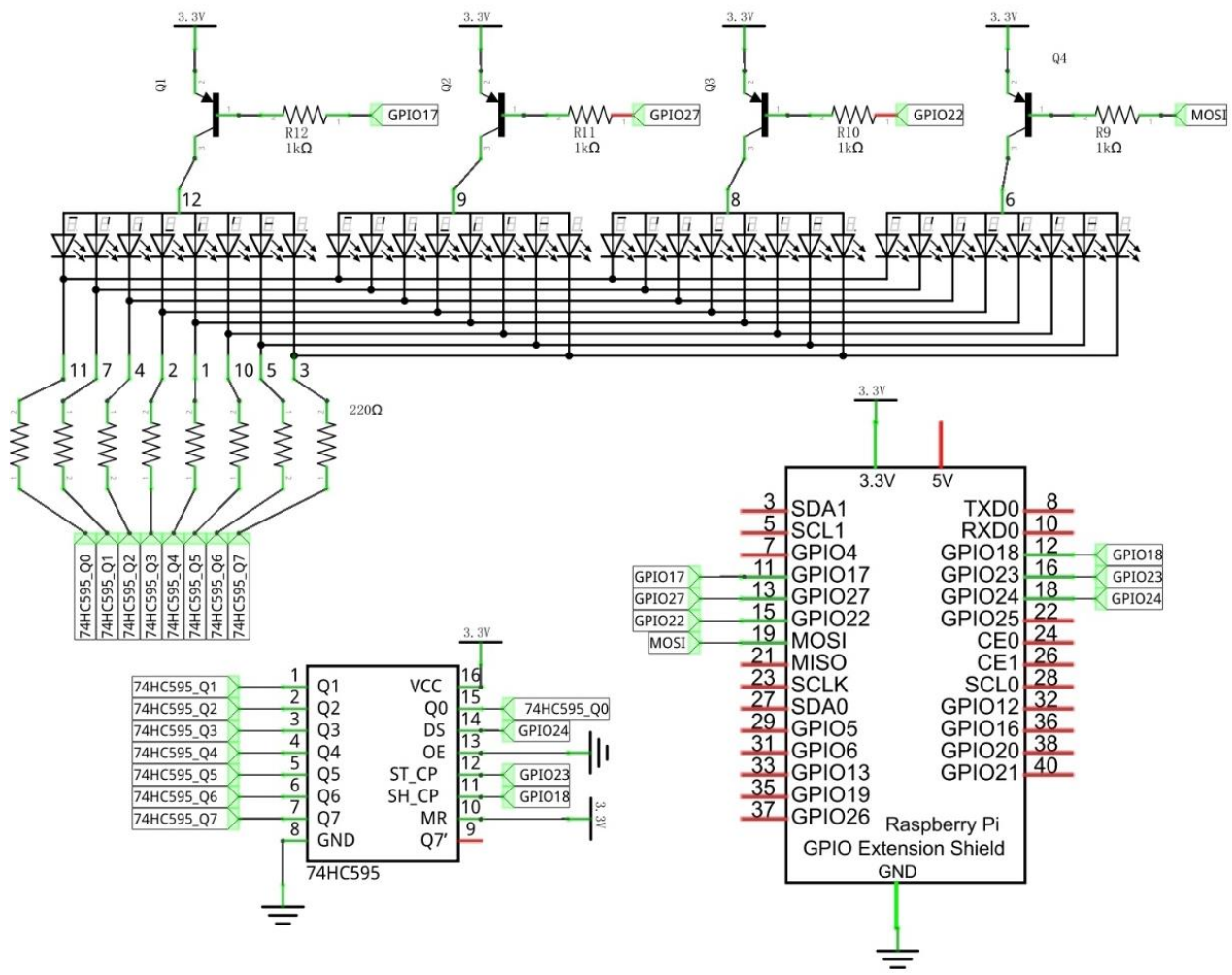

Hardware connection

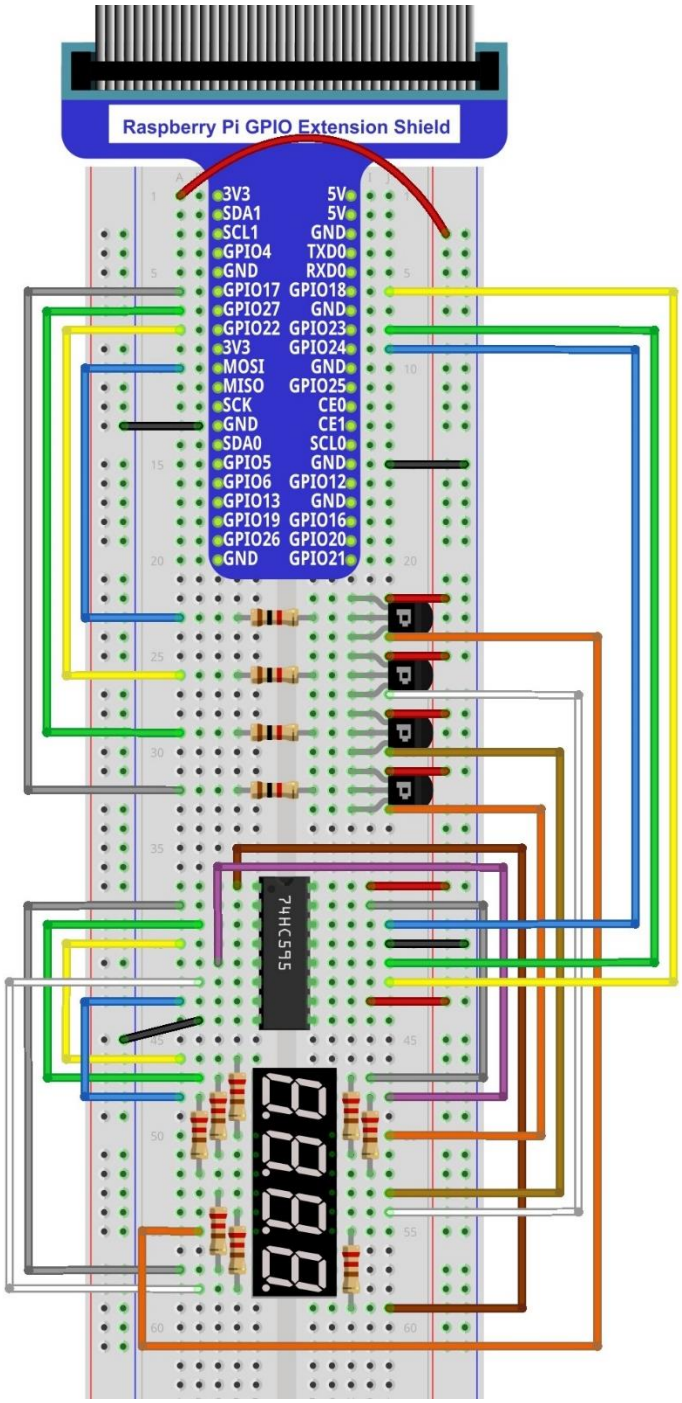

Sketch

In this project, open an independent thread to control the FDSSD. The uncertainty of the system time slice allocation may lead to FDSS flashing in the display, which is is a normal phenomenon. For details about display principle of FDSSD, please refer to our C and Python manual.

Sketch 11.2.1 FDSSD

First observe the running result of the sketch, and then analyze the code.

1. Use Processing to open the file Sketch_11_2_1_FDSSD.

```
processing
Freenove_RFID_Starter_Kit_for_Raspberry_Pi/Processing/Sketchs/Sketch_11_2_1_FDSSD/Sketch_11_2_1_FDSSD.pde
```

2. Click on "RUN" to run the code.

After the program is executed, Display Window and FDSSD in the circuit will show same figures, and they have the same add-self rate. They will constantly show the number of "0-9999" circularly. And dragging the progress bar can change the rate.

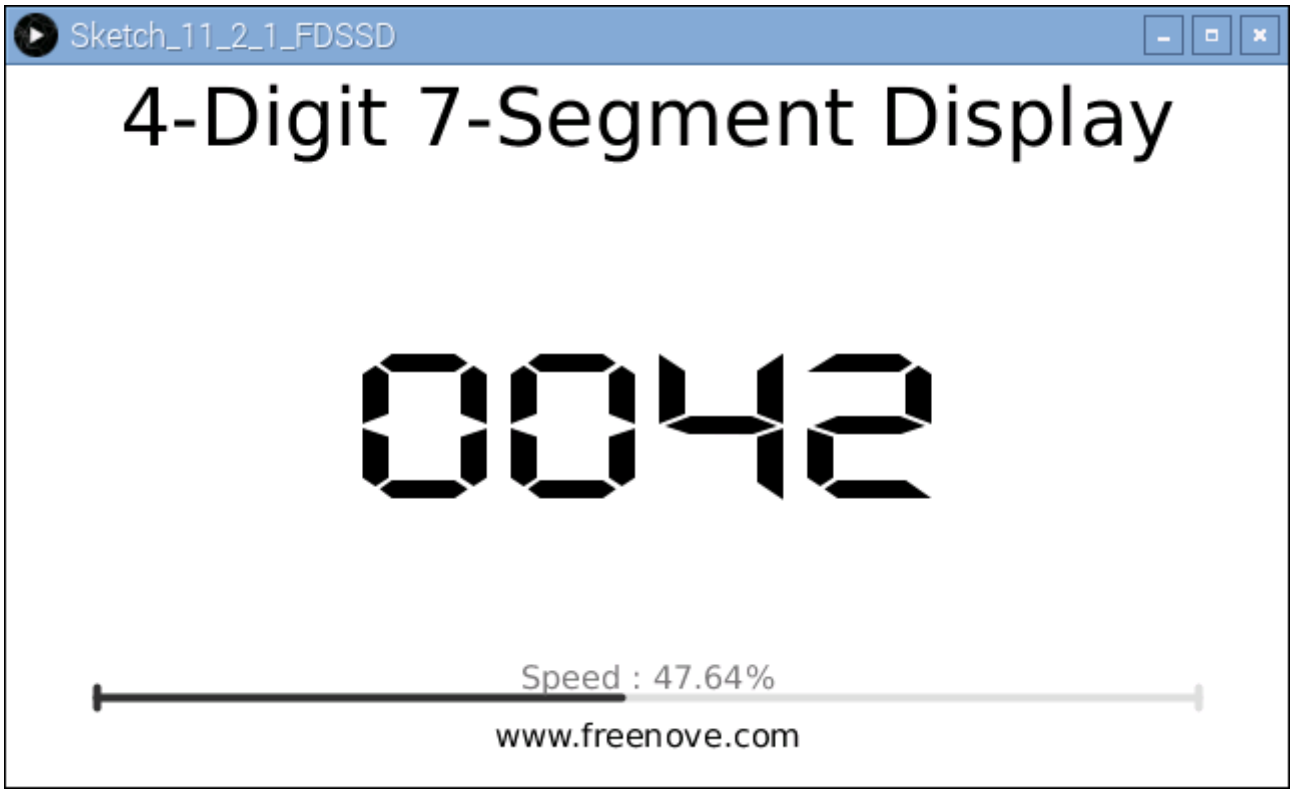

This project contains several code files, as shown below:

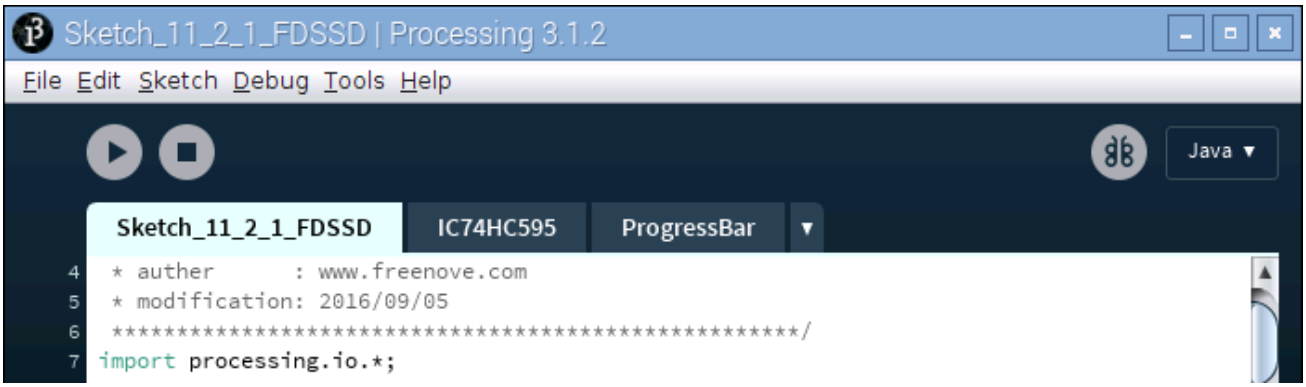

The following is program code:

```
import processing.io.*;

int dataPin = 24;    //connect to the 74HC595
int latchPin = 23;
int clockPin = 18;
int[] digitPin = {17, 27, 22, 10};//Connected to a common anode SSDthrough the transistor
final int borderSize = 45;    //border size
ProgressBar mBar;    //ProgressBar Object
IC74HC595 ic;      //IC74HC595 Object
boolean mMouse = false;    //determined whether a mouse click the ProgressBar
int index = 0;           // index of number
int lastMoveTime = 0;      //led last move time point
//encoding for character 0-9 of common anode SevenSegmentDisplay
final int[] numCode = {0xc0, 0xf9, 0xa4, 0xb0, 0x99, 0x92, 0x82, 0xf8, 0x80, 0x90};
PFont mFont;

void setup() {
  size(640, 360);
  for (int i =0; i<4; i++) {
    GPIO.pinMode(digitPin[i], GPIO.OUTPUT);
  }
  mBar = new ProgressBar(borderSize, height-borderSize, width-borderSize*2);
  mBar.setTitle("Speed");    //set the ProgressBar's title
  ic = new IC74HC595(dataPin, latchPin, clockPin);
  mFont = loadFont("DigifaceWide-100.vlw");  //create DigifaceWide font
  thread("displaySSD");
}

void draw() {
  background(255);
  titleAndSiteInfo();  //title and site information
  strokeWeight(4);    //border weight
  mBar.create();      //create the ProgressBar
```

```
  //control the speed of number change
  if (millis() - lastMoveTime > 50/(0.05+mBar.progress)) {
    lastMoveTime = millis();
    index++;
    if (index > 9999) {
      index = 0;
    }
  }
  showNum(index);    //show the number in dispaly window
}
void showNum(int num) {
  fill(0);
  textSize(100);
  textFont(mFont);    //digiface font
  textAlign(CENTER, CENTER);
  text(nf(num,4,0), width/2, height/2);
}

void displaySSD() {
  while (true) {
    display(index);
  }
}
void selectDigit(int digit) {
  GPIO.digitalWrite(digitPin[0], ((digit&0x08) == 0x08) ? GPIO.LOW : GPIO.HIGH);
  GPIO.digitalWrite(digitPin[1], ((digit&0x04) == 0x04) ? GPIO.LOW : GPIO.HIGH);
  GPIO.digitalWrite(digitPin[2], ((digit&0x02) == 0x02) ? GPIO.LOW : GPIO.HIGH);
  GPIO.digitalWrite(digitPin[3], ((digit&0x01) == 0x01) ? GPIO.LOW : GPIO.HIGH);
}
void display(int dec) {
  selectDigit(0x00);
  ic.write(ic.MSBFIRST, numCode[dec%10]);
  selectDigit(0x01);      //select the first, and display the single digit
  delay(1);               //display duration
  selectDigit(0x00);
  ic.write(ic.MSBFIRST, numCode[dec%100/10]);
  selectDigit(0x02);      //select the second, and display the tens digit
  delay(1);
  selectDigit(0x00);
  ic.write(ic.MSBFIRST, numCode[dec%1000/100]);
  selectDigit(0x04);      //select the third, and display the hundreds digit
  delay(1);
  selectDigit(0x00);
  ic.write(ic.MSBFIRST, numCode[dec%10000/1000]);
```

```
  selectDigit(0x08);      //select the fourth, and display the thousands digit
  delay(1);
}
void mousePressed() {
  if ( (mouseY< mBar.y+5) && (mouseY>mBar.y-5) ) {
    mMouse = true;    //the mouse click the progressBar
  }
}
void mouseReleased() {
  mMouse  = false;
}
void mouseDragged() {
  int a = constrain(mouseX, borderSize, width - borderSize);
  float t = map(a, borderSize, width - borderSize, 0.0, 1.0);
  if (mMouse) {
    mBar.setProgress(t);
  }
}
void titleAndSiteInfo() {
  fill(0);
  textAlign(CENTER);    //set the text centered
  textFont(createFont("", 100));  //default font
  textSize(40);        //set text size
  text("4-Digit 7-Segment Display", width / 2, 40);    //title
  textSize(16);
  text("www.freenove.com", width / 2, height - 20);    //site
}
```

This project code is similar to the last section "SSD". The difference is that this project needs to control four SSD. The four coanodes of four SSD is controlled by four GPIO through 4 transistors. First, the four GPIO is defined.

```
int[] digitPin = {17, 27, 22, 10};
```

In a separate thread, make the FDSSD display numbers in scan mode. Subfunction display() is used to make FDSSD display a four-digit number.

```
  thread("displaySSD");
……
void displaySSD() {
  while (true) {
    display(index);
  }
}
```

Other contents of the program are the same as the last section "SSD".

Chapter 12 74HC595 & LED Matrix

In this chapter, we will learn how to use 74HC959 to control more LEDs, LED Matrix.

Project 12.1 LED Matrix

In this project, we will use two 74HC595 to control a monochrome LEDMatrix (8*8) to make it display some graphics and characters.

Component List

Raspberry Pi 3B x1 GPIO Extension Board & Wire x1 BreadBoard x1		Jumper M/M x41
74HC595 x2 	8*8 LEDMatrix x1 	Resistor 220Ω x8

Circuit

In this experimental circuit, the power pin of 74HC595 is connected to 3.3V. It can also be connected to 5V to make LEDMatrix brighter.

Schematic diagram

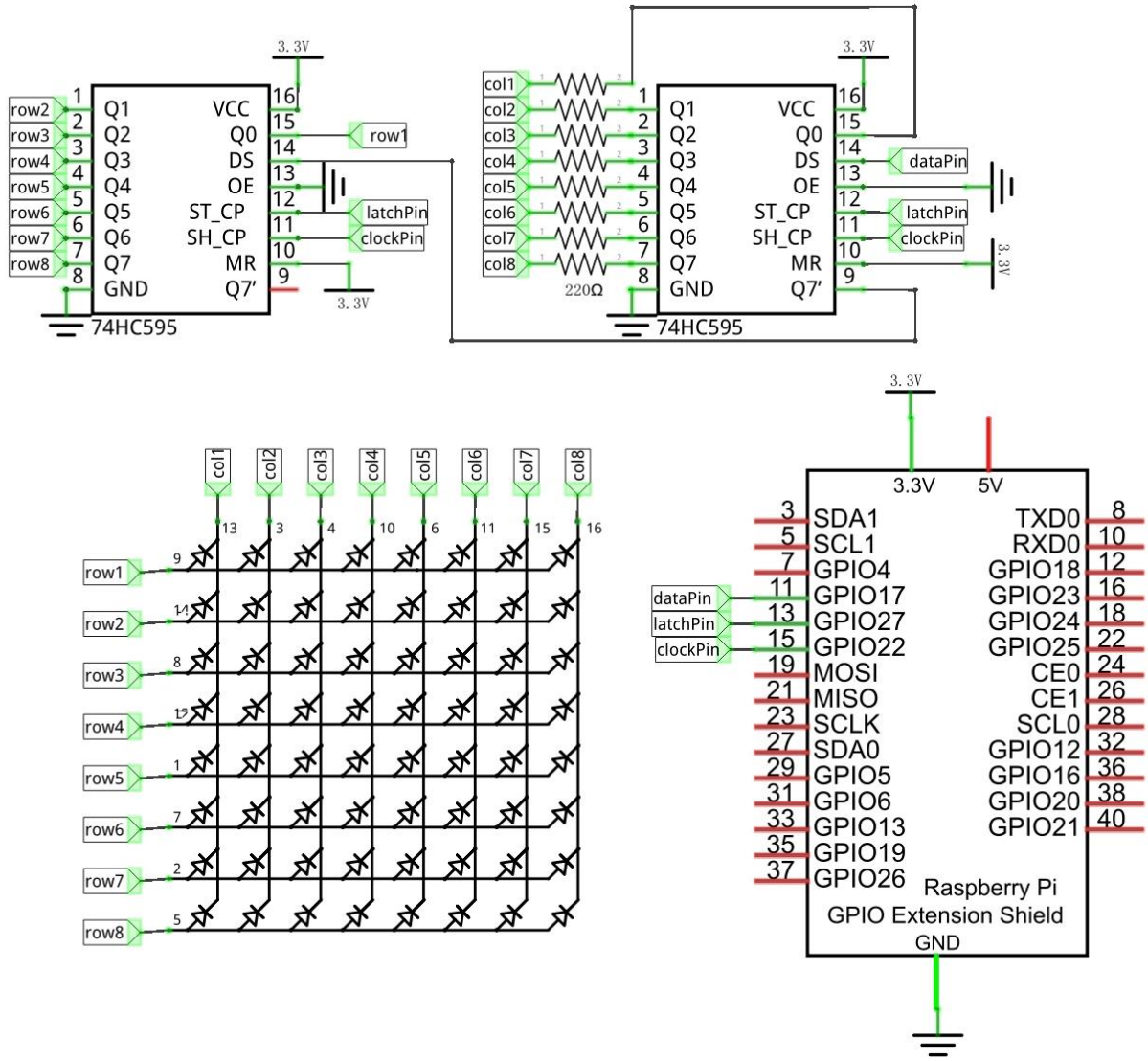

Hardware connection

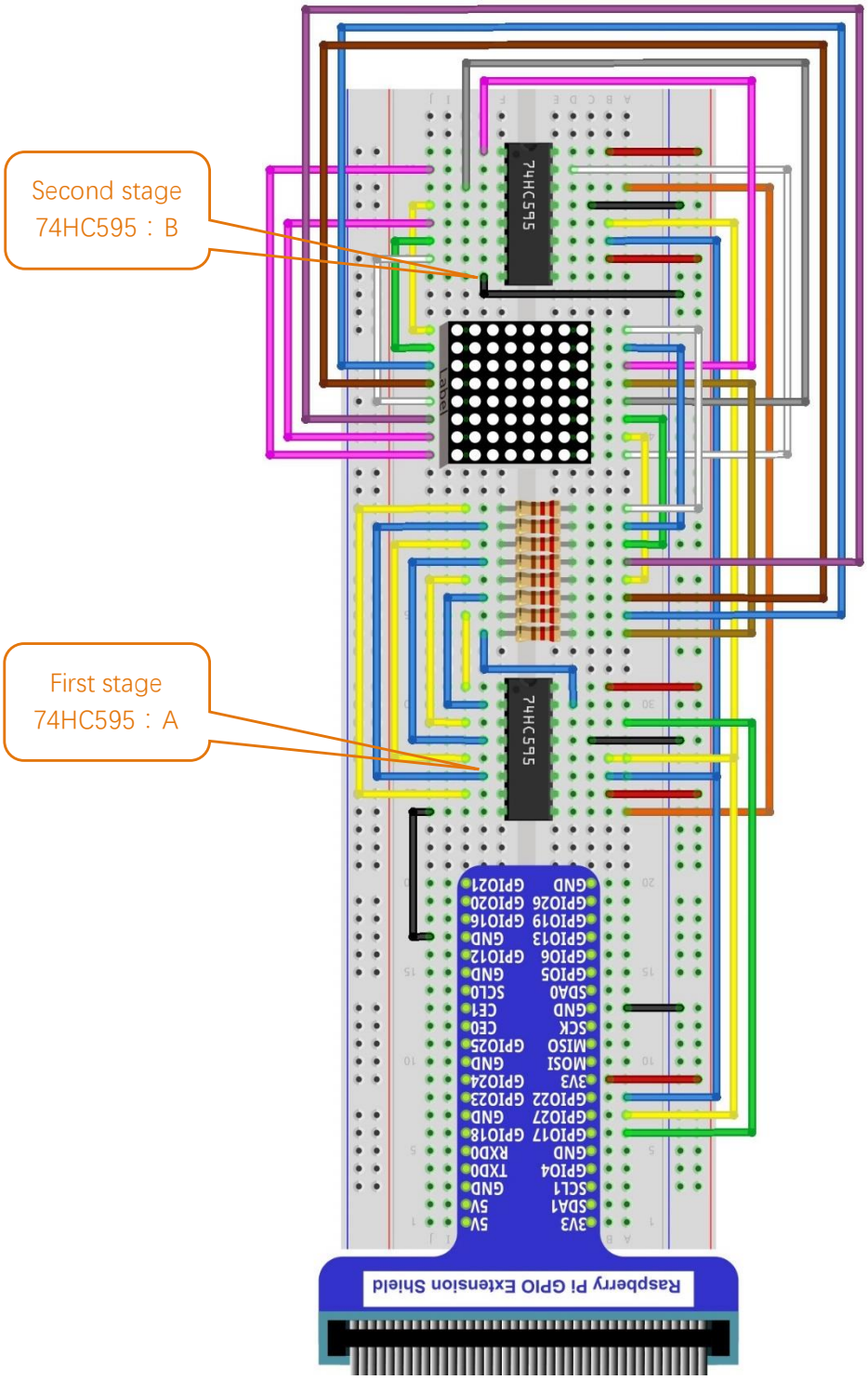

Sketch

Sketch 12.1.1 LEDMatrix

First observe the running result of the sketch, and then analyze the code.

1. Use Processing to open the file Sketch_12_1_1_LEDMatrix.

```
processing
Freenove_RFID_Starter_Kit_for_Raspberry_Pi/Processing/Sketchs/Sketch_12_1_1_LEDMatrix/Sketch_12_1_1_LEDMatrix.pde
```

2. Click on "RUN" to run the code.

After the program is executed, LEDMatrix will show a smiling face pattern, then start scrolling display of character "0-F". Display Window will display the characters "0-F" synchronously. Dragging the progress bar can change the rolling speed of character on LEDMatrix. (The project code in the LEDMatrix is operate with scanning method in a separate thread. The uncertainty of the CPU time slice may cause LEDMatrix display flashing.)

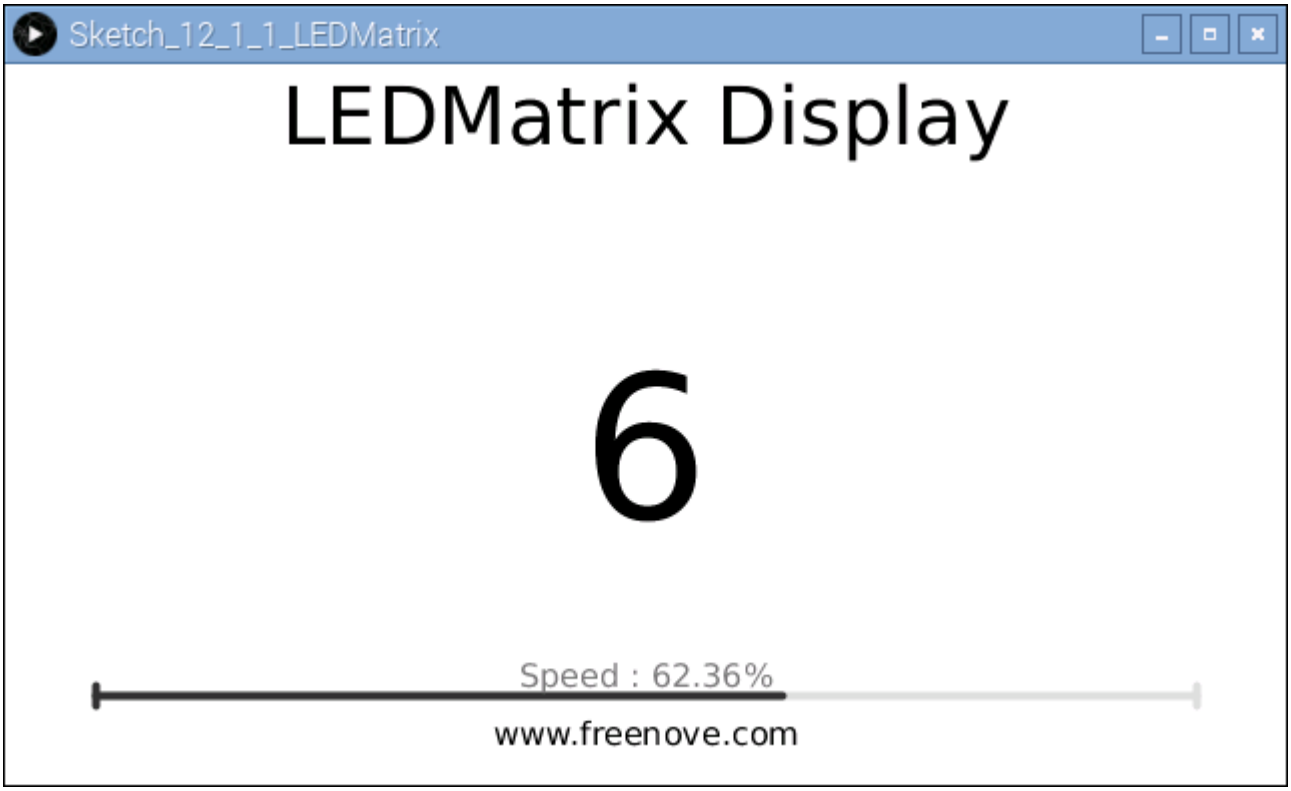

This project contains a lot of code files, and the core code is contained in the file Sketch_12_1_1_LEDMatrix. The other files only contain some custom classes.

The following is program code:

```
import processing.io.*;

int dataPin = 17;    //connect to the 74HC595
int latchPin = 27;
int clockPin = 22;
final int borderSize = 45;    //border size
ProgressBar mBar;    //ProgressBar Object
IC74HC595 ic;      //IC74HC595 Object
boolean mMouse = false;    //determined whether a mouse click the ProgressBar
int index = 0;           // index of number
//encoding for smile face
final int[] pic = {0x1c, 0x22, 0x51, 0x45, 0x45, 0x51, 0x22, 0x1c};
//encoding for character 0-9 of ledmatrix
final int[] numCode={
  0x00, 0x00, 0x00, 0x00, 0x00, 0x00, 0x00, 0x00, // " "
  0x00, 0x00, 0x3E, 0x41, 0x41, 0x3E, 0x00, 0x00, // "0"
  0x00, 0x00, 0x21, 0x7F, 0x01, 0x00, 0x00, 0x00, // "1"
  0x00, 0x00, 0x23, 0x45, 0x49, 0x31, 0x00, 0x00, // "2"
  0x00, 0x00, 0x22, 0x49, 0x49, 0x36, 0x00, 0x00, // "3"
  0x00, 0x00, 0x0E, 0x32, 0x7F, 0x02, 0x00, 0x00, // "4"
  0x00, 0x00, 0x79, 0x49, 0x49, 0x46, 0x00, 0x00, // "5"
  0x00, 0x00, 0x3E, 0x49, 0x49, 0x26, 0x00, 0x00, // "6"
  0x00, 0x00, 0x60, 0x47, 0x48, 0x70, 0x00, 0x00, // "7"
  0x00, 0x00, 0x36, 0x49, 0x49, 0x36, 0x00, 0x00, // "8"
  0x00, 0x00, 0x32, 0x49, 0x49, 0x3E, 0x00, 0x00, // "9"
  0x00, 0x00, 0x3F, 0x44, 0x44, 0x3F, 0x00, 0x00, // "A"
  0x00, 0x00, 0x7F, 0x49, 0x49, 0x36, 0x00, 0x00, // "B"
  0x00, 0x00, 0x3E, 0x41, 0x41, 0x22, 0x00, 0x00, // "C"
  0x00, 0x00, 0x7F, 0x41, 0x41, 0x3E, 0x00, 0x00, // "D"
  0x00, 0x00, 0x7F, 0x49, 0x49, 0x41, 0x00, 0x00, // "E"
  0x00, 0x00, 0x7F, 0x48, 0x48, 0x40, 0x00, 0x00, // "F"
  0x00, 0x00, 0x00, 0x00, 0x00, 0x00, 0x00, 0x00, // " "
};
myThread t = new myThread();    //create a new thread for ledmatrix
void setup() {
  size(640, 360);
  mBar = new ProgressBar(borderSize, height-borderSize, width-borderSize*2);
  mBar.setTitle("Speed");    //set the ProgressBar's title
  ic = new IC74HC595(dataPin, latchPin, clockPin);
  t.start();    //thread start
}

```

```
void draw() {
  background(255);
  titleAndSiteInfo();  //title and site information
  strokeWeight(4);    //border weight
  mBar.create();      //create the ProgressBar
  displayNum(hex(index, 1));    //show the number in dispaly window
}
class myThread extends Thread {
  public void run() {
    while (true) {
      showMatrix();    //show smile picture
      showNum();      //show the character "0-F"
    }
  }
}
void showMatrix() {
  for (int j=0; j<100; j++) {    //picture show time
    int x=0x80;
    for (int i=0; i<8; i++) {    //display a frame picture
      GPIO.digitalWrite(latchPin, GPIO.LOW);
      ic.shiftOut(ic.MSBFIRST, pic[i]);
      ic.shiftOut(ic.MSBFIRST, ~x);
      GPIO.digitalWrite(latchPin, GPIO.HIGH);
      x>>=1;
    }
  }
}
void showNum() {
  for (int j=0; j<numCode.length-8; j++) { //where to start showing
    index = j/8;
    for (int k =0; k<10*(1.2-mBar.progress); k++) {    //speed
      int x=0x80;
      for (int i=0; i<8; i++) {    //display a frame picture
        GPIO.digitalWrite(latchPin, GPIO.LOW);
        ic.shiftOut(ic.MSBFIRST, numCode[j+i]);
        ic.shiftOut(ic.MSBFIRST, ~x);
        GPIO.digitalWrite(latchPin, GPIO.HIGH);
        x>>=1;
      }
    }
  }
}
void displayNum(String num) {
  fill(0);
```

```
  textSize(100);
  textAlign(CENTER, CENTER);
  text(num, width/2, height/2);
}
void mousePressed() {
  if ( (mouseY< mBar.y+5) && (mouseY>mBar.y-5) ) {
    mMouse = true;    //the mouse click the progressBar
  }
}
void mouseReleased() {
  mMouse  = false;
}
void mouseDragged() {
  int a = constrain(mouseX, borderSize, width - borderSize);
  float t = map(a, borderSize, width - borderSize, 0.0, 1.0);
  if (mMouse) {
    mBar.setProgress(t);
  }
}
void titleAndSiteInfo() {
  fill(0);
  textAlign(CENTER);    //set the text centered
  textFont(createFont("", 100));  //default font
  textSize(40);        //set text size
  text("LEDMatrix Display", width / 2, 40);    //title
  textSize(16);
  text("www.freenove.com", width / 2, height - 20);    //site
}
```

In the code, first define the data of smiling face and characters "0-F".

```
//encoding for smile face
final int[] pic = {0x1c, 0x22, 0x51, 0x45, 0x45, 0x51, 0x22, 0x1c};
//encoding for character 0-9 of ledmatrix
final int[] numCode={
……
};
```

Then create a new thread t. LEDMatrix scan display code will be executed in run() of this thread.

```
myThread t = new myThread();    //create a new thread for ledmatrix
……
class myThread extends Thread {
  public void run() {
    while (true) {
      showMatrix();    //show smile picture
```

```
        showNum();       //show the character "0-F"
      }
    }
  }
```

The function setup(), define size of Display Window, ProgressBar class objects and IC75HC595 class object, and start the thread t.

```
void setup() {
  size(640, 360);
  mBar = new ProgressBar(borderSize, height-borderSize, width-borderSize*2);
  mBar.setTitle("Speed");     //set the ProgressBar's title
  ic = new IC74HC595(dataPin, latchPin, clockPin);
  t.start();     //thread start
}
```

In draw(), draw the relevant information and the current number to display.

```
void draw() {
  background(255);
  titleAndSiteInfo();  //title and site information
  strokeWeight(4);     //border weight
  mBar.create();       //create the ProgressBar
  displayNum(hex(index, 1));     //show the number in dispaly window
}
```

Subfunction showMatrix () makes LEDMatrix display a smiling face patterns, and last for a period of time.

```
void showMatrix() {
  for (int j=0; j<100; j++) {     //picture show time
    int x=0x80;
    for (int i=0; i<8; i++) {     //display a frame picture
      GPIO.digitalWrite(latchPin, GPIO.LOW);
      ic.shiftOut(ic.MSBFIRST, pic[i]);
      ic.shiftOut(ic.MSBFIRST, ~x);
      GPIO.digitalWrite(latchPin, GPIO.HIGH);
      x>>=1;
    }
  }
}
```

Subfunction showNum() makes LEDMatrix scroll display of character "0-F", in which the variable k is used to adjust the scrolling speed.

```
void showNum() {
  for (int j=0; j<numCode.length-8; j++) { //where to start showing
    index = j/8;
    for (int k =0; k<10*(1.2-mBar.progress); k++) {    //speed
      int x=0x80;
      for (int i=0; i<8; i++) {    //display a frame picture
        GPIO.digitalWrite(latchPin, GPIO.LOW);
        ic.shiftOut(ic.MSBFIRST, numCode[j+i]);
        ic.shiftOut(ic.MSBFIRST, ~x);
        GPIO.digitalWrite(latchPin, GPIO.HIGH);
        x>>=1;
      }
    }
  }
}
```

Chapter 13 I2C-LCD1602

In this chapter, we will learn a display screen, LCD1602.

Project 13.1 LCD

In the project, the current time and date will be displayed on the LCD1602 and Display Window.

Component List

Raspberry Pi 3B x1 GPIO Extension Board & Wire x1 BreadBoard x1	Jumper M/M x4
I2C LCD1602 Module x1 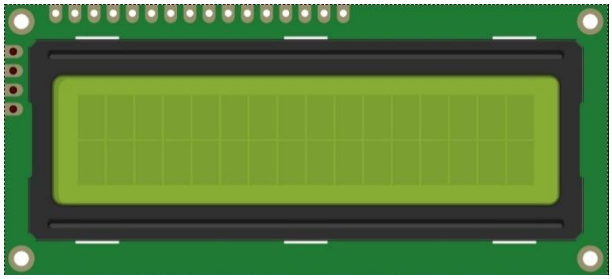	

Circuit

Note that the power supply for I2CLCD1602 in this circuit is 5V.

Schematic diagram

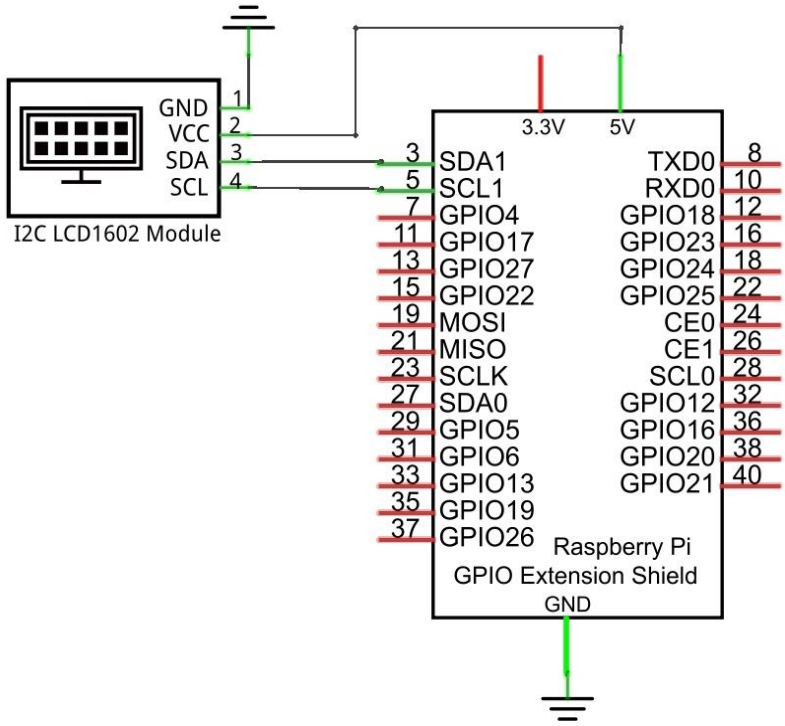

Hardware connection

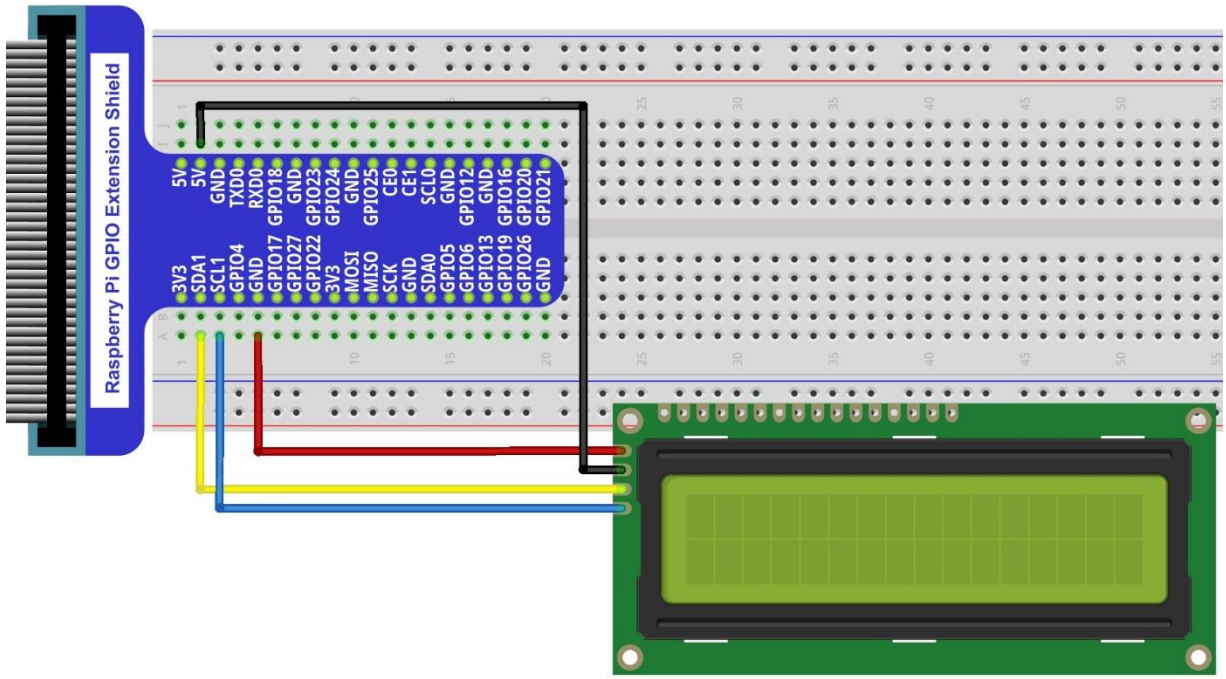

Sketch

Sketch 13.1.1 LCD

First observe the results of the code and the phenomenon, and then analyze the code.

1. Use Processing to open the file Sketch_13_1_1_LCD.

```
processing
Freenove_RFID_Starter_Kit_for_Raspberry_Pi/Processing/Sketchs/Sketch_13_1_1_LCD/Sketch_13_1_1_LCD.pde
```

2. Click on "RUN" to run the code.

After the program is executed, both LCD in the circuit and the Display Window will show the current time and date.

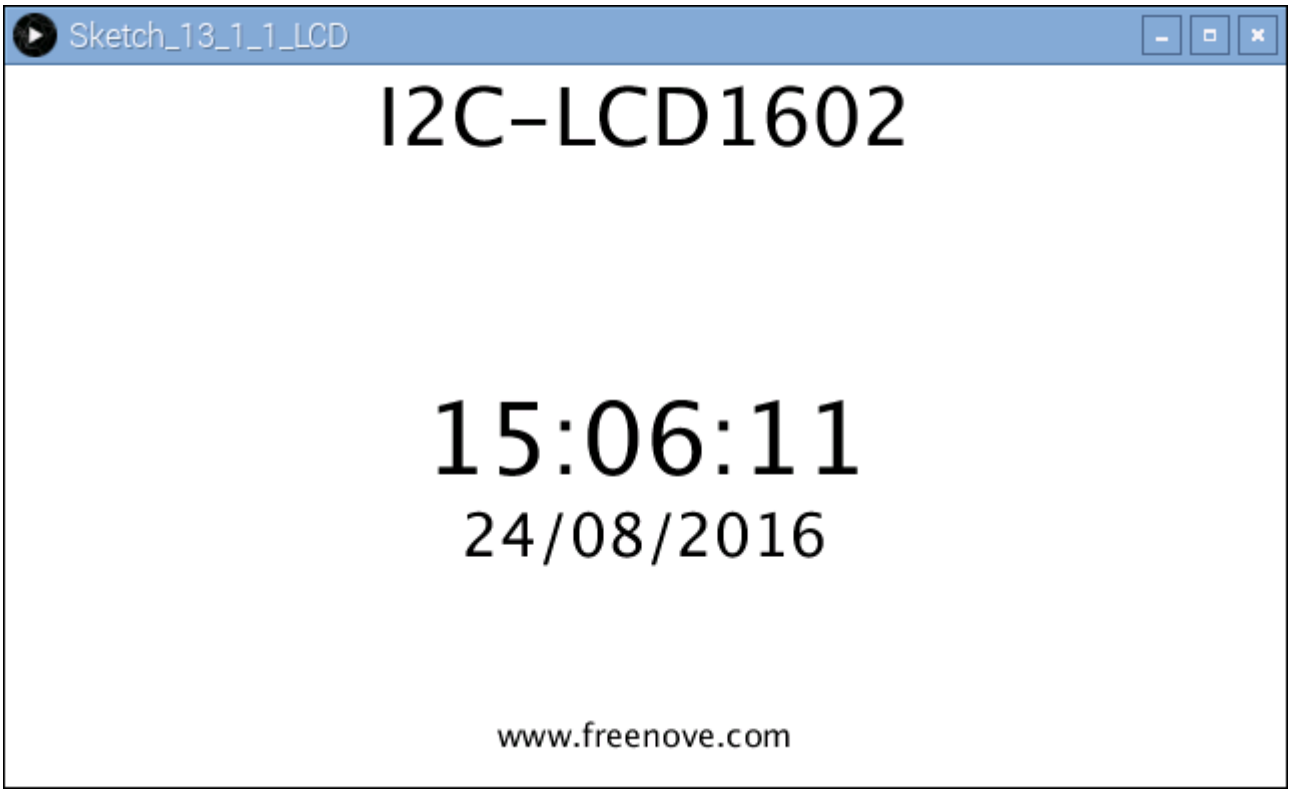

This project contains a lot of code files, and the core code is contained in the file Sketch_13_1_1_LCD. The other files only contain some custom classes.

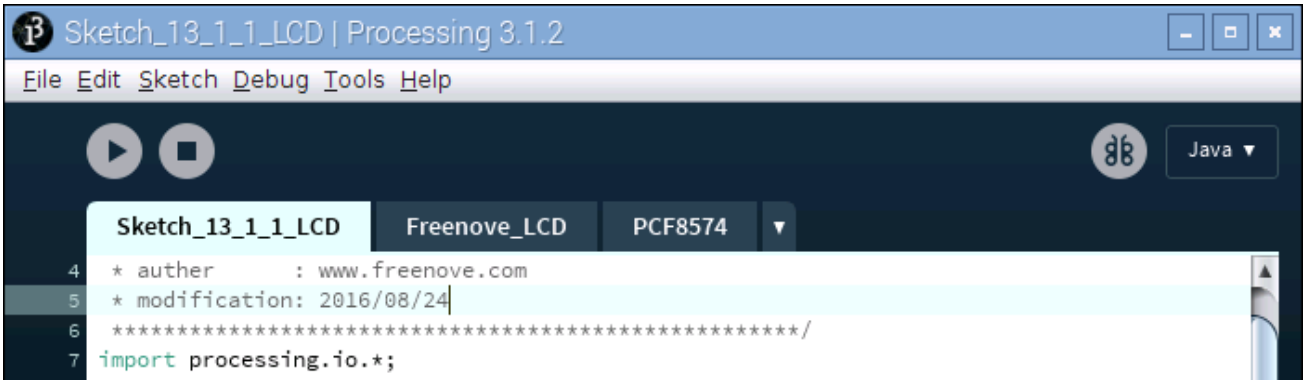

The following is program code:

```
import processing.io.*;
//Create a object of class PCF8574
PCF8574 pcf = new PCF8574(0x27);
Freenove_LCD1602 lcd;  //Create a lcd object
String time = "";
String date = "";
void setup() {
  size(640, 360);
  lcd = new Freenove_LCD1602(pcf);
  frameRate(2);    //set display window frame rate for 2 HZ
}
void draw() {
  background(255);
  titleAndSiteInfo();
  //get current time
  time = nf(hour(), 2, 0) + ":" + nf(minute(), 2, 0) + ":" + nf(second(), 2, 0);
  //get current date
  date = nf(day(), 2, 0)+"/"+nf(month(), 2, 0)+"/"+nf(year(), 2, 0);
  lcd.position(4, 0);  //show time on the lcd display
  lcd.puts(time);
  lcd.position(3, 1);  //show date on the lcd display
  lcd.puts(date);
  showTime(time, date);  //show time/date on the display window
}
void showTime(String time, String date) {
  fill(0);
  textAlign(CENTER, CENTER);
  textSize(50);
  text(time, width/2, height/2);
  textSize(30);
  text(date, width/2, height/2+50);
}
void titleAndSiteInfo() {
  fill(0);
  textAlign(CENTER);    //set the text centered
  textSize(40);        //set text size
  text("I2C-LCD1602", width / 2, 40);    //title
  textSize(16);
  text("www.freenove.com", width / 2, height - 20);    //site
}
```

First create a PCF8574 class object "pcf", and take "pcf" as a parameter to create a LCD1602 class object. And then define the variable time to store date and time. Display window need not refresh frequently. Therefore, the frame rate can be set to 1Hz or 2Hz.

```
PCF8574 pcf = new PCF8574(0x27);
Freenove_LCD1602 lcd;  //Create a lcd object
String time = "";
String date = "";
void setup() {
  size(640, 360);
  lcd = new Freenove_LCD1602(pcf);
  frameRate(2);    //set display window frame rate for 2 HZ
}
```

In the function draw(), get the current time and date, and display them on the LCD1602 and Display Window.

```
void draw() {
  background(255);
  titleAndSiteInfo();
  //get current time
  time = nf(hour(), 2, 0) + ":" + nf(minute(), 2, 0) + ":" + nf(second(), 2, 0);
  //get current date
  date = nf(day(), 2, 0)+"/"+nf(month(), 2, 0)+"/"+nf(year(), 2, 0);
  lcd.position(4, 0);  //show time on the lcd display
  lcd.puts(time);
  lcd.position(3, 1);  //show date on the lcd display
  lcd.puts(date);
  showTime(time, date);  //show time/date on the display window
}
```

About class PCF8574：

class PCF8574

This is a custom class that is used to control the integrated circuit PCF8574.

`public PCF8574(int addr)`

Constructor, used to create a PCF8574 class object, parameters for the I2C device address of PCF8574.

`public int digitalRead(int pin)`

Used to read the value(HIGH/LOW) of one of the ports.

`public int readByte()`

Used to read values of all ports.

`public void digitalWrite(int pin, int val)`

Write data(HIGH/LOW) to a port.

`public void writeByte(int data)`

Write data to all ports.

About class Freenove_LCD:

class Freenove_LCD

This is a custom class that is currently only used to control the I2C-LCD1602 connected to PCF8574.

```
public Freenove_LCD1602(PCF8574 ipcf)
```

Constructor, used to create Freenove_LCD1602 class object, the parameter for PCF8574 class object.

```
public void putChar(char data)
```

Write a character to the LCD screen.

```
public void puts(String str)
```

Write a string to the LCD screen.

```
public void display(boolean state)
```

Turn on/off LCD.

```
public void lcdCursor(boolean state)
```

Turn on/off Cursor.

```
public void cursorBlink(boolean state)
```

Turn on/off Cursor Blink.

```
public void position(int x, int y)
```

Set the location of Cursor.

```
public void home()
```

Set the Cursor to home.

```
public void lcdClear()
```

Clear the screen.

```
public void backLightON() & public void backLightOFF()
```

Turn on/off the backlight.

```
public void scrollDisplayLeft() & public void scrollDisplayRight()
```

Shift screen of a unit to left/right.

```
public void leftToRight() & public void rightToLeft()
```

Set text direction as form left to right / from right to left.

```
public void autoScroll() & public void noAutoScroll()
```

Automatic shifting screen/turn off automatic shifting screen.

Chapter 14 Joystick

In the previous chapter, we have learned how to use rotary potentiometer. Now, let's learn a new electronic module Joystick which working on the same principle as rotary potentiometer.

Project 14 Joystick

In this project, we will read the data of joystick, and draw its coordinates position and Z axis state in the Display window.

Component List

Raspberry Pi 3B x1 GPIO Expansion Board & Wire x1 BreadBoard x1	Jumper M/M x12 M/F x5 	
PCF8591 x1 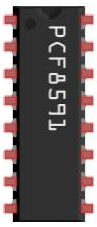	Resistor 10kΩ x2 	Joystick x1 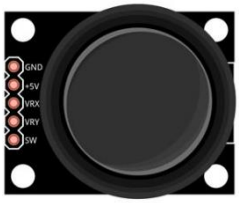

Circuit

Schematic diagram

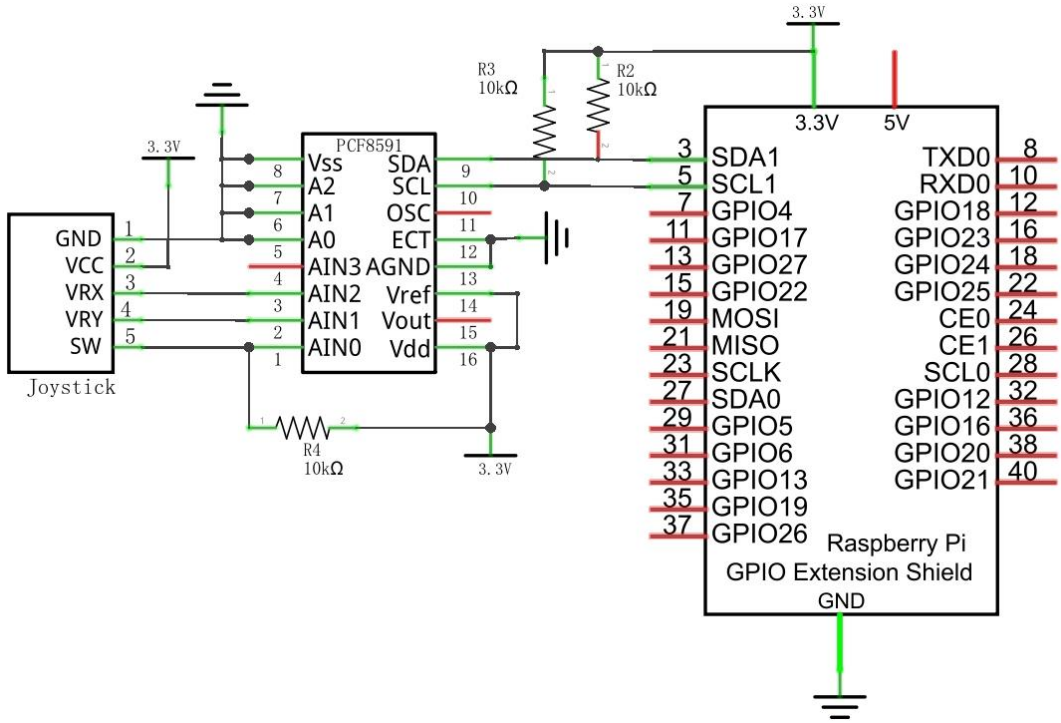

Hardware connection

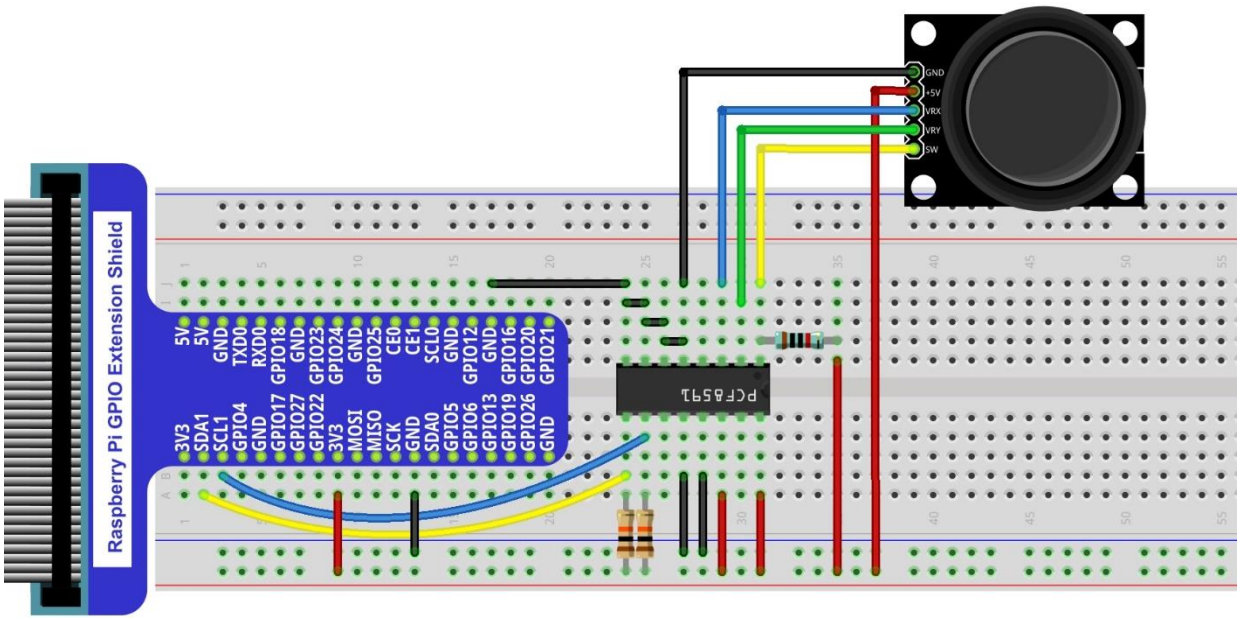

Sketch

Sketch 14.1.1 Joystick

First observe the running result of the sketch, and then analyze the code.

1. Use Processing to open the file Sketch_14_1_1_Joystick.

```
processing
Freenove_RFID_Starter_Kit_for_Raspberry_Pi/Processing/Sketchs/Sketch_14_1_1_Joystick/Sketch_14_1_1_Joystick.pde
```

2. Click on "RUN" to run the code.

After the program is executed, Display Window shows the current relative position of Joystick. And the upper left corner shows ADC value of three axes of the Joystick.

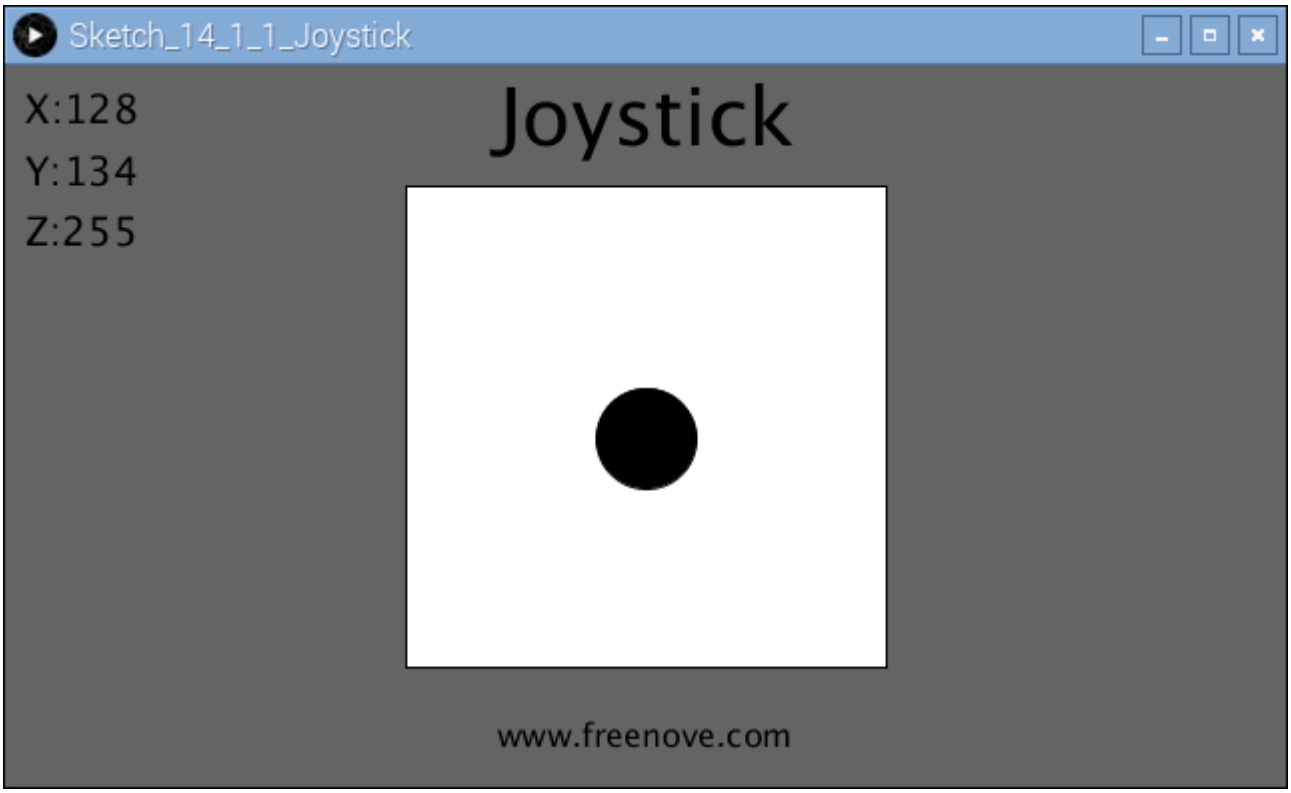

When the button of Z axis is pressed, the circle will change the filled color.

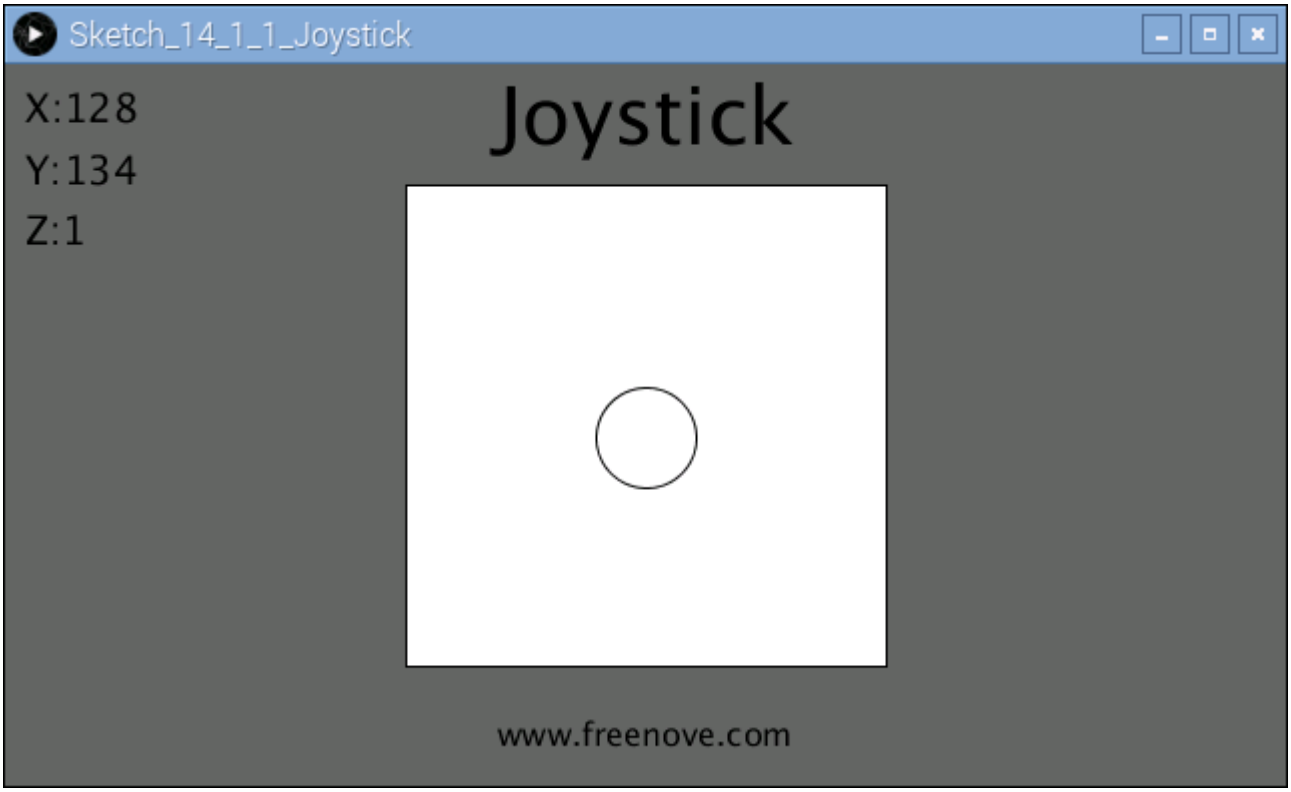

This project contains several code files, as shown below:

The following is program code:

```
import processing.io.*;
//Create a object of class PCF8591
PCF8591 pcf = new PCF8591(0x48);
int cx, cy, cd, cr;    //define the center point,side length & half.

void setup() {
  size(640, 360);
  cx = width/2;    //center of the display window
  cy = height/2;    //
  cd = (int)(height/1.5);
  cr = cd /2;
}
void draw() {
  int x=0, y=0, z=0;
```

```
  x = pcf.analogRead(2);  //read the ADC of joystick
  y = pcf.analogRead(1);  //
  z = pcf.analogRead(0);
  background(102);
  titleAndSiteInfo();
  fill(0);
  textSize(20);
  textAlign(LEFT,TOP);
  text("X:"+x+"\nY:"+y+"\nZ:"+z,10,10);

  fill(255);    //wall color
  rect(cx-cr, cy-cr, cd, cd);
  fill(constrain(z, 255, 0));    //joysitck color
  ellipse(map(x, 0, 255, cx-cr, cx+cr), map(y, 0, 255, cy-cr, cy+cr), 50, 50);
}
void titleAndSiteInfo() {
  fill(0);
  textAlign(CENTER);    //set the text centered
  textSize(40);        //set text size
  text("Joystick", width / 2, 40);    //title
  textSize(16);
  text("www.freenove.com", width / 2, height - 20);    //site
}
```

In function draw(), the ADC value of three axes Joystick is read. And the ADC value of X and Y directions are mapped into the position of the circle, and the ADC value of Z axis is mapped into filled color of the circle.

```
void draw() {
  int x=0, y=0, z=0;
  x = pcf.analogRead(2);  //read the ADC of joystick
  y = pcf.analogRead(1);  //
  z = pcf.analogRead(0);
  background(102);
  titleAndSiteInfo();
  fill(0);
  textSize(20);
  textAlign(LEFT,TOP);
  text("X:"+x+"\nY:"+y+"\nZ:"+z,10,10);

  fill(255);    //wall color
  rect(cx-cr, cy-cr, cd, cd);
  fill(constrain(z, 255, 0));    //joysitck color
  ellipse(map(x, 0, 255, cx-cr, cx+cr), map(y, 0, 255, cy-cr, cy+cr), 50, 50);
}
```

Chapter 15 Relay & Motor

In this chapter, we will learn how to use relay.

Project 15.1 Relay & Motor

In the project, the relay is used to control the DC motor.

Component List

Raspberry Pi 3B x1 GPIO Expansion Board & Wire x1 BreadBoard x1			Jumper M/M x8	
9V battery (prepared by yourself) & battery line				
Breadboard extension x1			Resistor 10kΩ x2	Resistor 1kΩ x1	Resistor 220Ω x1
NPN transistor x1	Relay x1	Motor x1	Push button x1	LED x1	Diode x1

Circuit

Pay attention to the power supply voltage needed for the components in circuit, in which the relay needs power supply voltage 5V, and the motor needs 3.3V. Additionally, a LED is used as an indicator for the relay (turned on or turned off).

Schematic diagram

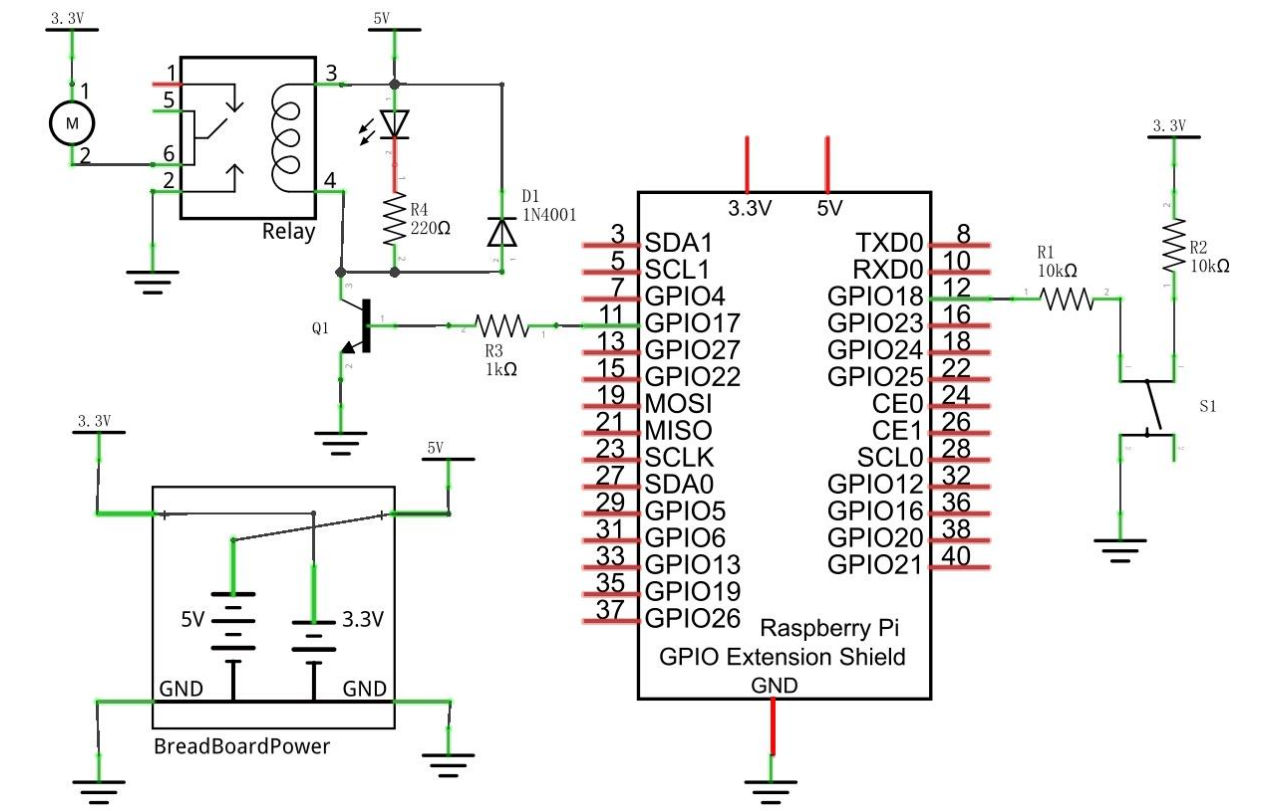

Hardware connection

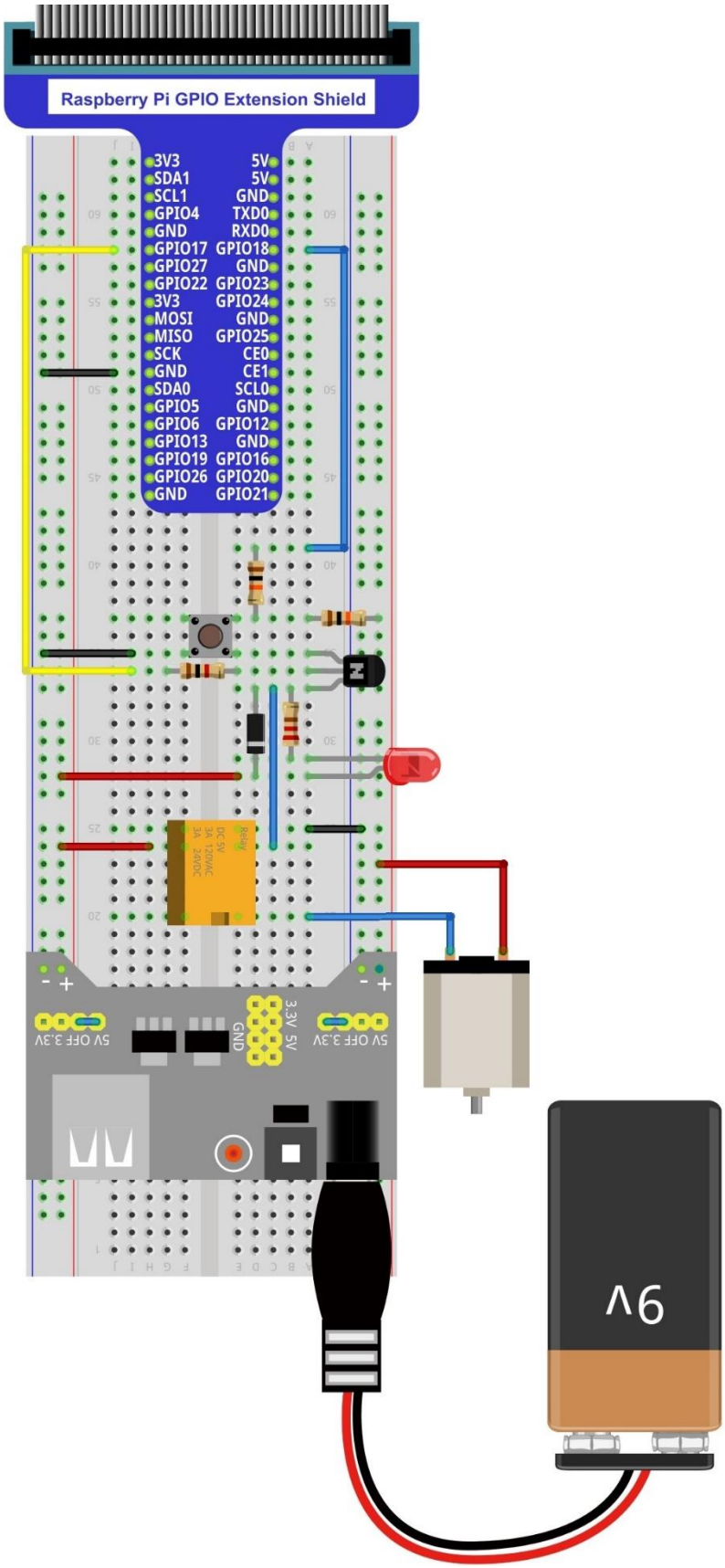

Sketch

Sketch 15.1.1 Relay

First observe the running result of the sketch, and then analyze the code.

1. Use Processing to open the file Sketch_15_1_1_Relay.

```
processing
Freenove_RFID_Starter_Kit_for_Raspberry_Pi/Processing/Sketchs/Sketch_15_1_1_Relay/Sketch_15_1_1_Relay.pde
```

2. Click on "RUN" to run the code.

After the program is executed, Display Window shows the fan pattern used to simulate the motor and a Button for controlling of the relay.

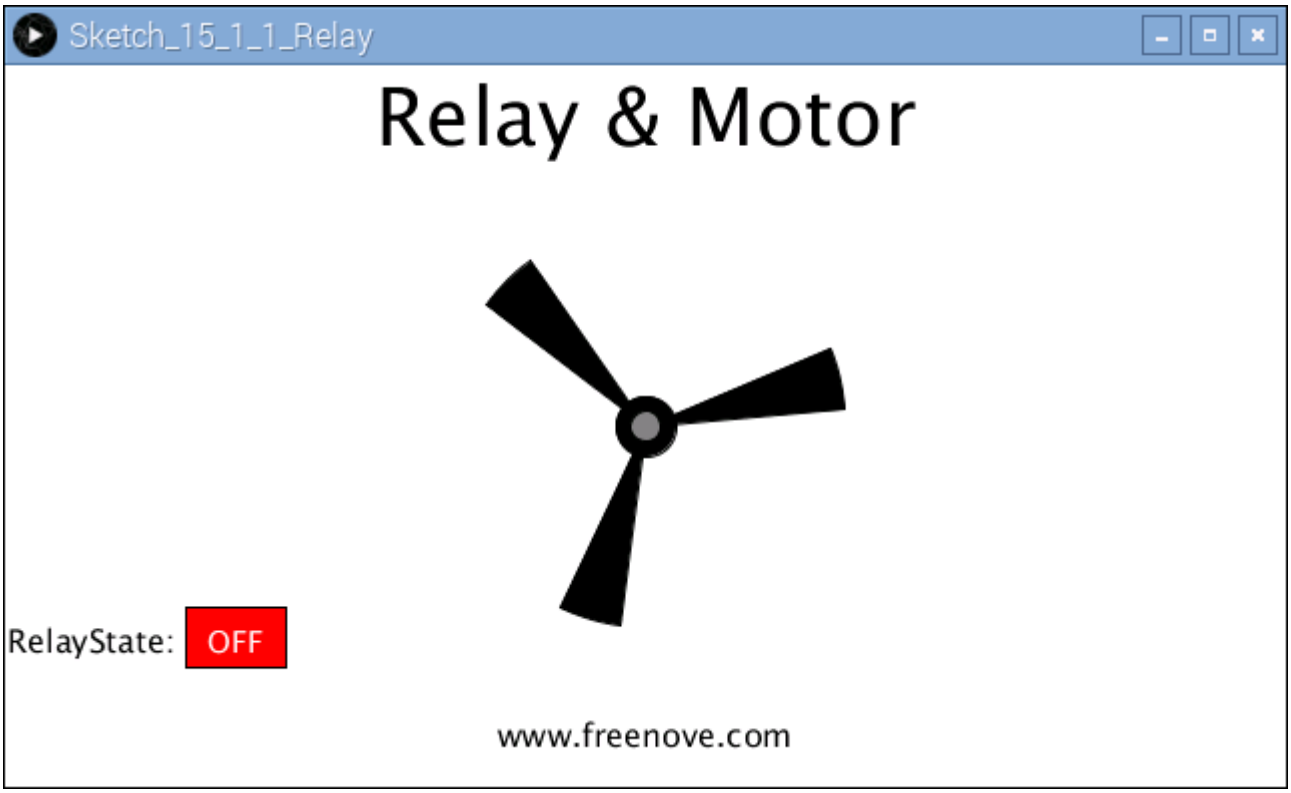

Click on the button in Display Window or press the button in the circuit, then the relay is opened and the motor drived. Press the Button again, then the reverse is the case.

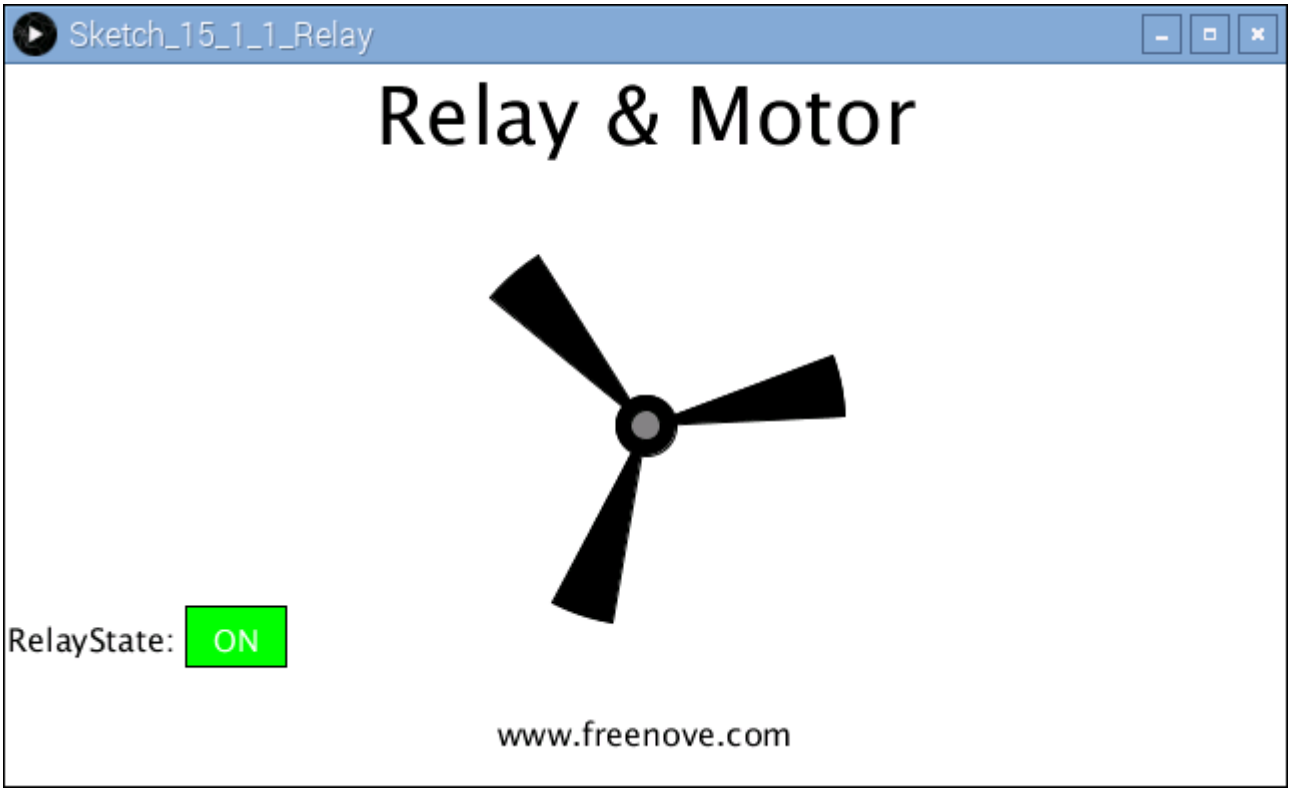

This project contains several code files, as shown below:

The following is program code:

```
import processing.io.*;

int relayPin = 17;
int buttonPin = 18;
SingleKey skey = new SingleKey(buttonPin);
boolean relayState = false;
BUTTON btn;
float rotaSpeed = 0.02 * PI;  //virtual fan's rotating speed,
float rotaPosition = 0;  //motor position
```

```
void setup() {
  size(640, 360);
  GPIO.pinMode(relayPin, GPIO.OUTPUT);
  btn = new BUTTON(90, height - 90, 50, 30);   //define the button
  btn.setBgColor(0, 255, 0);  //set button color
  btn.setText("OFF");        //set button text
}

void draw() {
  background(255);
  titleAndSiteInfo();  //title and site information

  skey.keyScan();    //key scan
  if (skey.isPressed) {  //key is pressed?
    relayAction();
  }
  textAlign(RIGHT, CENTER);
  text("RelayState: ", btn.x, btn.y+btn.h/2);
  btn.create();      //create the button
  if (relayState) {
    rotaPosition += rotaSpeed;
  }
  if (rotaPosition >= 2*PI) {
    rotaPosition = 0;
  }
  drawFan(rotaPosition);    //show the virtual fan in Display window
}
//Draw a clover fan according to the stating angle
void drawFan(float angle) {
  constrain(angle, 0, 2*PI);
  fill(0);
  for (int i=0; i<3; i++) {
    arc(width/2, height/2, 200, 200, 2*i*PI/3+angle, (2*i+0.3)*PI/3+angle, PIE);
  }
  fill(0);
  ellipse(width/2, height/2, 30, 30);
  fill(128);
  ellipse(width/2, height/2, 15, 15);
}
void relayAction() {
  if (relayState) {
    GPIO.digitalWrite(relayPin, GPIO.LOW);
    relayState = false;
    btn.setBgColor(255, 0, 0);
```

```
    btn.setText("OFF");
  } else {
    GPIO.digitalWrite(relayPin, GPIO.HIGH);
    relayState = true;
    btn.setBgColor(0, 255, 0);
    btn.setText("ON");
  }
}
void mousePressed() {
  if ((mouseY< btn.y+btn.h) && (mouseY>btn.y)
    && (mouseX< btn.x+btn.w) && (mouseX>btn.x)) { // the mouse click the button
    relayAction();
  }
}
void titleAndSiteInfo() {
  fill(0);
  textAlign(CENTER);    //set the text centered
  textSize(40);        //set text size
  text("Relay & Motor", width / 2, 40);    //title
  textSize(16);
  text("www.freenove.com", width / 2, height - 20);    //site
}
```

First define pins corresponding to the key and relay.

```
int relayPin = 17;
int buttonPin = 18;
SingleKey skey = new SingleKey(buttonPin);
boolean relayState = false;
BUTTON btn;
```

In the function setup(), Window Display and virtual button are initialized.

```
void setup() {
  size(640, 360);
  GPIO.pinMode(relayPin, GPIO.OUTPUT);
  btn = new BUTTON(90, height - 90, 50, 30);   //define the button
  btn.setBgColor(0, 255, 0);  //set button color
  btn.setText("OFF");        //set button text
}
```

In the function draw(), scan entity buttons. If the button is pressed, then executed the subfunction relayAction(), in which the state of Relay and virtual buttons will be changed. And then draw the virtual buttons and fan blades.

```
void draw() {
  background(255);
```

```
  titleAndSiteInfo();  //title and site information

  skey.keyScan();    //key scan
  if (skey.isPressed) {  //key is pressed?
    relayAction();
  }
  textAlign(RIGHT, CENTER);
  text("RelayState: ", btn.x, btn.y+btn.h/2);
  btn.create();      //create the button
  if (relayState) {
    rotaPosition += rotaSpeed;
  }
  if (rotaPosition >= 2*PI) {
    rotaPosition = 0;
  }
  drawFan(rotaPosition);    //show the virtual fan in Display window
}
```

About class SingleKey：

class SingleKey

This is a custom class that is used to control the state of an independent single key.

`public SingleKey(int Pin)`

Constructor, used to create a SingleKey class object, the parameter for the GPIO pin number connected to the key.

`void keyScan()`

Used to detecte key state. If the key is pressed, the member variable isPressed will be turned to true, and corresponding GPIO pin number will be assigned to the global variable keyValue. Otherwise, isPressed for false, keyValue for -1.

Chapter 16 Stepping Motor

In this chapter, we will learn how to use Stepping Motor。

Project 16.1 Stepping Motor

In this project, we will learn to control the speed, turning and step number of Stepping Motor.

Component List

Raspberry Pi 3B x1 GPIO Expansion Board & Wire x1 BreadBoard x1	Jumper M/M x1 M/F x6
Stepping Motor x1 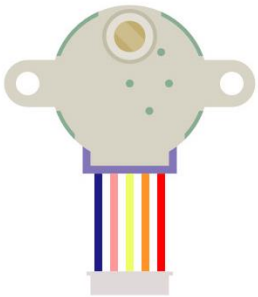	ULN2003 Stepper Motor Driver x1 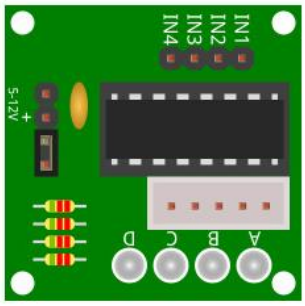

Circuit

When building the circuit, the rated voltage of the stepper motor is 5V, and use the breadboard power supply independently, and do not use the RPi power supply. Additionally, breadboard power supply needs to share Ground with RPi.

Schematic diagram

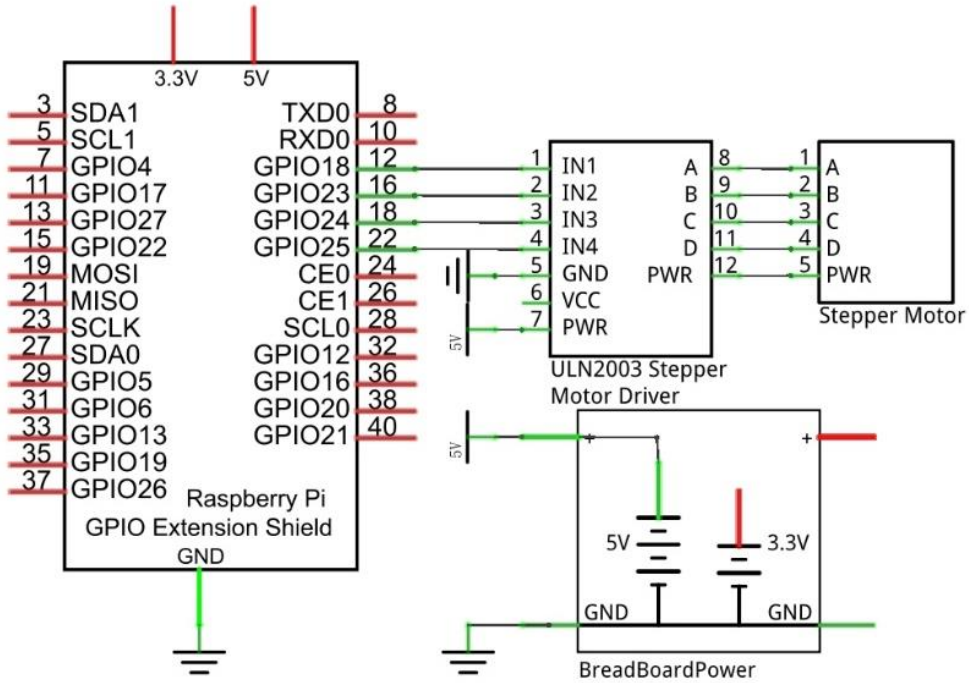

Hardware connection

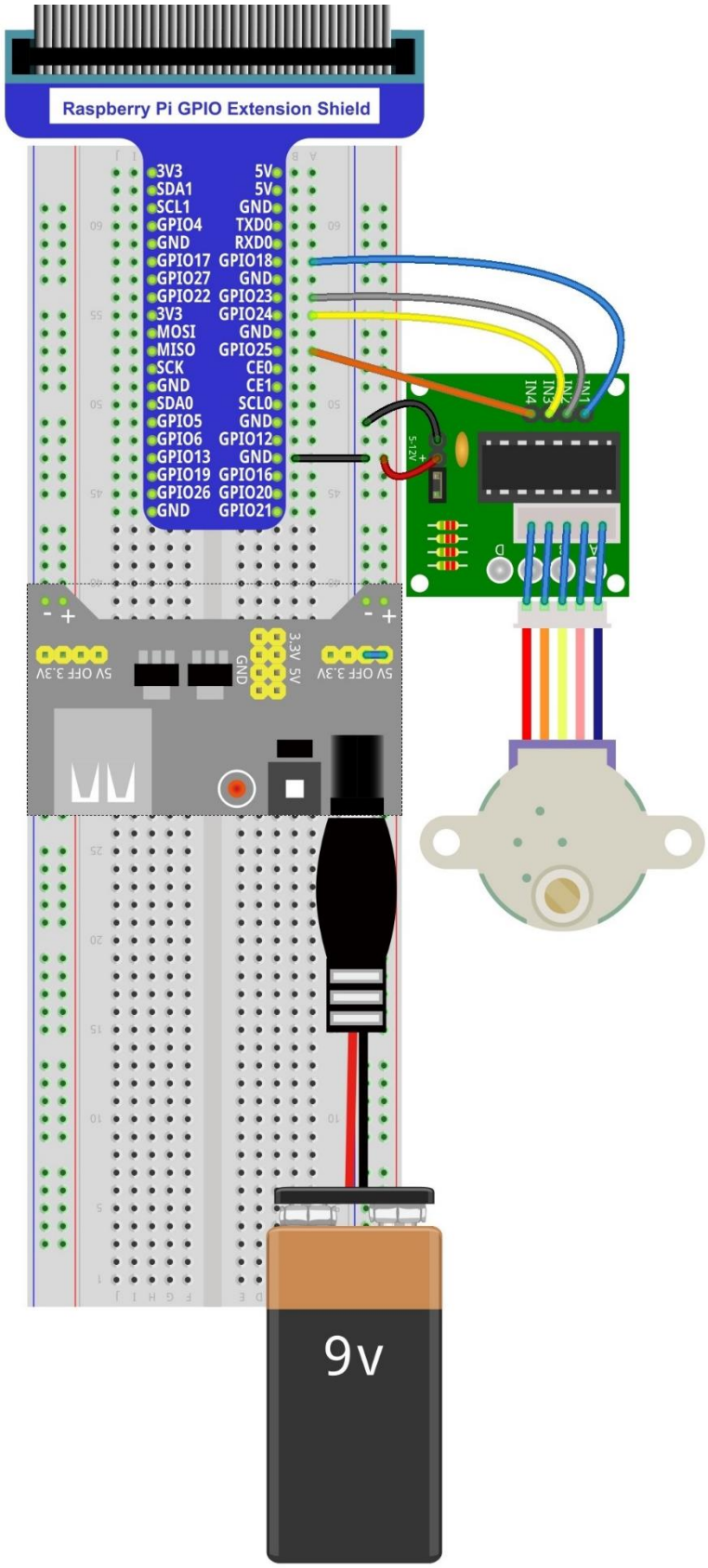

Sketch

In this project, a separate thread is opened to control the stepper motor. The uncertainty of the system time slice allocation may lead to the running of the stepper motor not smooth, which is a normal phenomenon.

Sketch 16.1.1 SteppingMotor

First observe the running result of the sketch, and then analyze the code.

1. Use Processing to open the file Sketch_16_1_1_SteppingMotor.

```
processing
Freenove_RFID_Starter_Kit_for_Raspberry_Pi/Processing/Sketchs/Sketch_16_1_1_SteppingMotor/Sketch_16_1_1_SteppingMotor.pde
```

2. Click on "RUN" to run the code.

After the program is executed, Display Window shows a pattern used to simulate the motor, and a button used to control RUN/STOP state of stepper motor. The stepper motor in the circuit and the virtual motor in the Display Window will start to rotate at the same time.

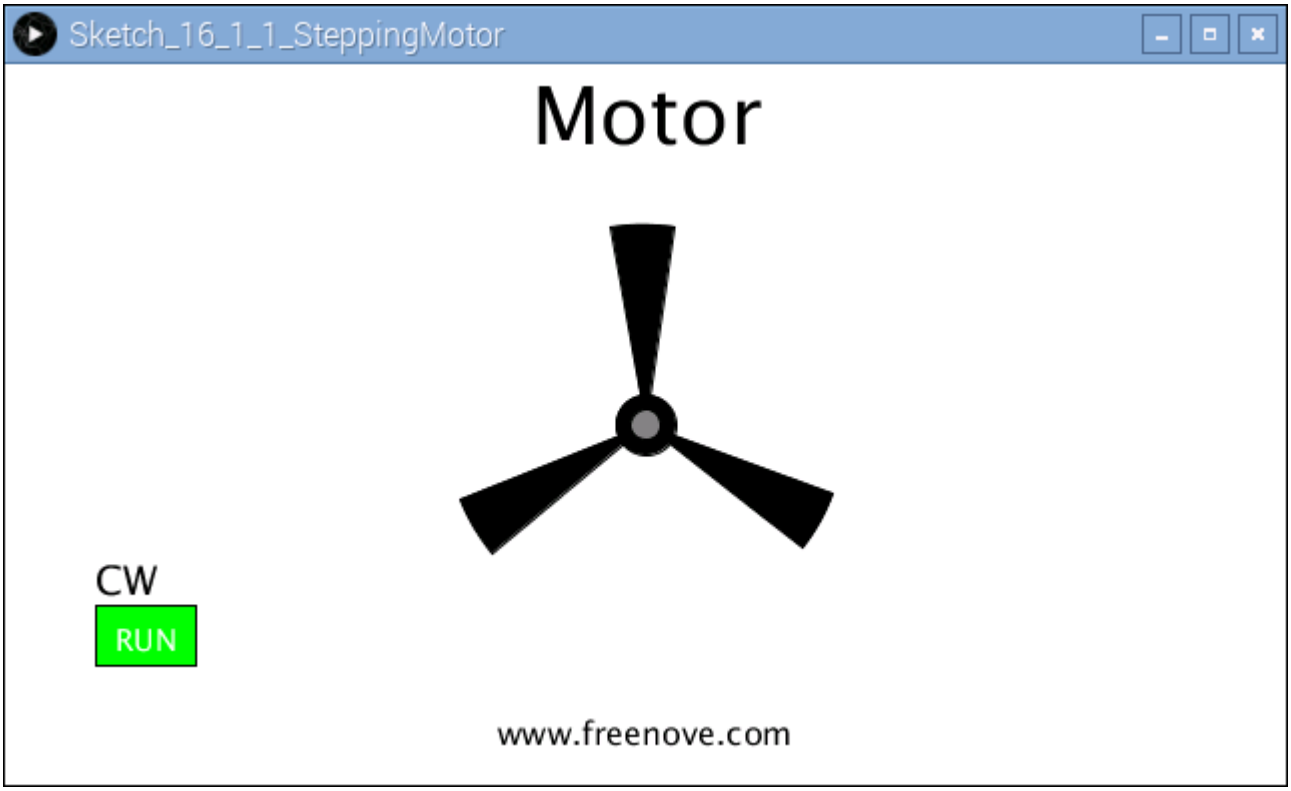

The stepping motor rotates at a fixed speed for a circle and then rotates counterclockwise for a circle, circularly. Clicking on the Button can change the state (start or stop) of the stepping motor.

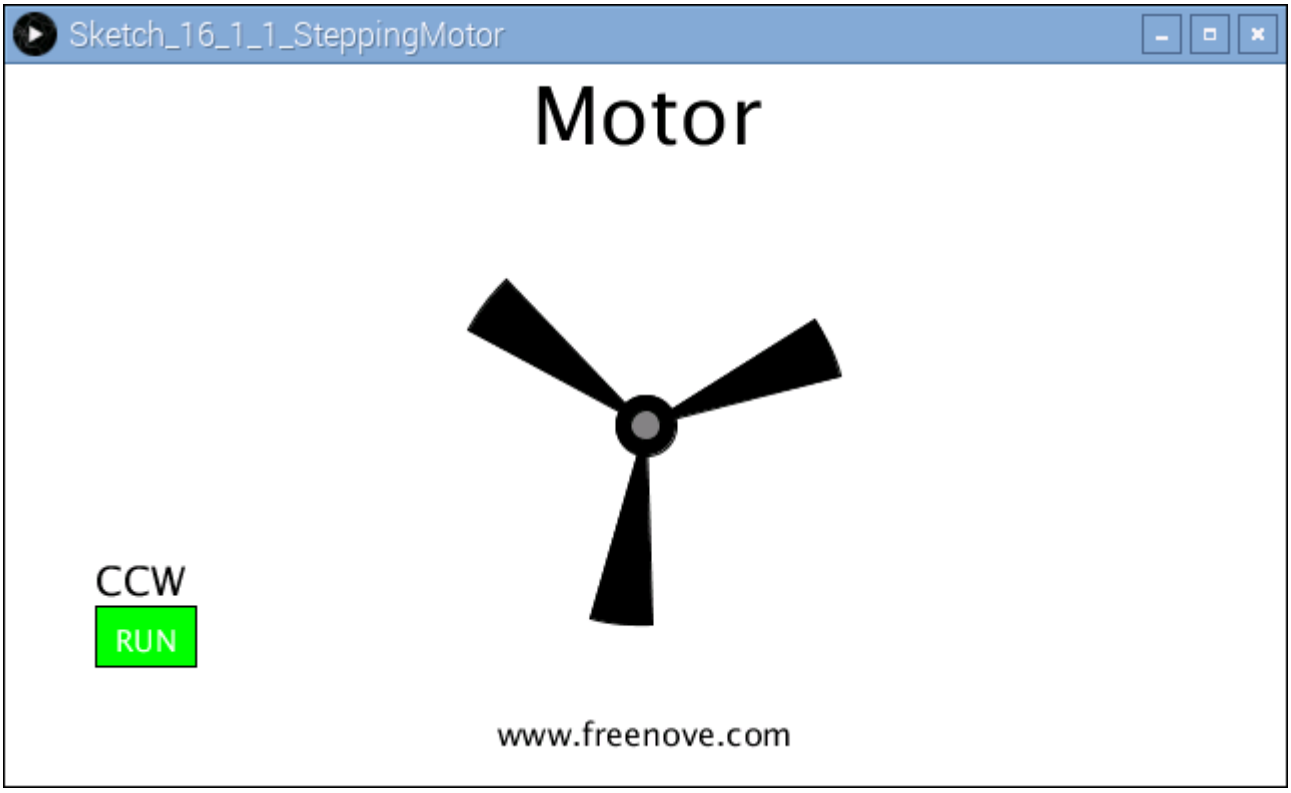

This project contains several code files, as shown below:

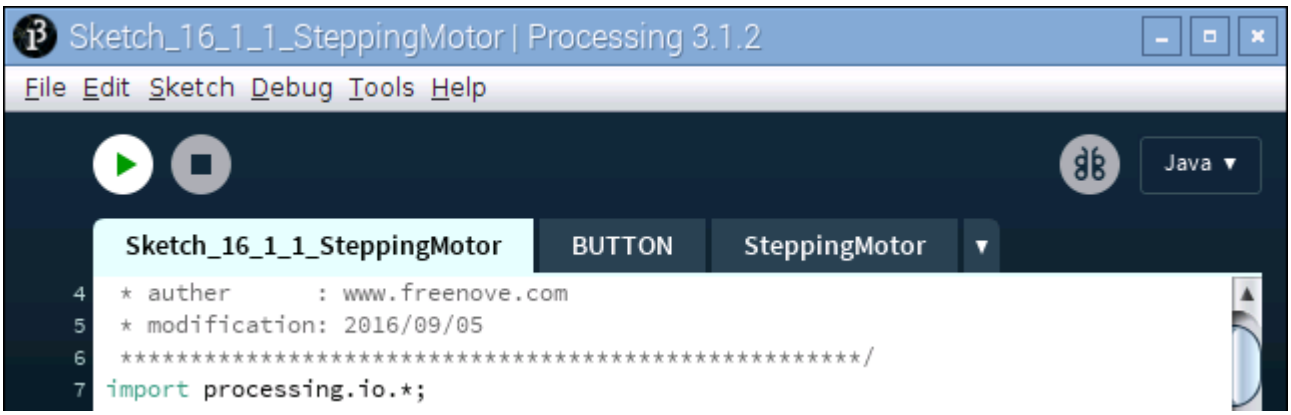

The following is program code:

```
import processing.io.*;

int[] pins = {18, 23, 24, 25};    //connect to motor phase A,B,C,D pins
BUTTON btn;    //BUTTON Object, For controlling the direction of motor
SteppingMotor m = new SteppingMotor(pins);
float rotaSpeed = 0, rotaPosition = 0;  //motor speed
boolean isMotorRun = true;    //motor run/stop flag

void setup() {
```

```
  size(640, 360);
  btn = new BUTTON(45, height - 90, 50, 30);   //define the button
  btn.setBgColor(0, 255, 0);  //set button color
  btn.setText("RUN");         //set button text
  m.motorStart();             //start motor thread
  rotaSpeed = 0.002 * PI;  //virtual fan's rotating speed
}

void draw() {
  background(255);
  titleAndSiteInfo();  //title and site information
  btn.create();      //create the button
  if (isMotorRun) {   //motor is runnig
    fill(0);
    textAlign(LEFT,BOTTOM);
    textSize(20);
    if (m.dir == m.CW) {
      text("CW",btn.x,btn.y);     //text "CW "
      rotaPosition+=rotaSpeed;
      if (rotaPosition>=TWO_PI) {
        rotaPosition = 0;
      }
    } else if (m.dir == m.CCW) {
      text("CCW",btn.x,btn.y);  //text "CCW"
      rotaPosition-=rotaSpeed;
      if (rotaPosition<=0) {
        rotaPosition = TWO_PI;
      }
    }
  }
  if (m.steps<=0) {      //if motor has stopped,
    if (m.dir == m.CCW) {        //change the direction ,restart.
      m.moveSteps(m.CW, 1, 512);
    } else if (m.dir == m.CW) {
      m.moveSteps(m.CCW, 1, 512);
    }
  }
  drawFan(rotaPosition);    //show the virtual fan in Display window
}
//Draw a clover fan according to the stating angle
void drawFan(float angle) {
  constrain(angle, 0, 2*PI);
  fill(0);
  for (int i=0; i<3; i++) {
```

```
    arc(width/2, height/2, 200, 200, 2*i*PI/3+angle, (2*i+0.3)*PI/3+angle, PIE);
  }
  fill(0);
  ellipse(width/2, height/2, 30, 30);
  fill(128);
  ellipse(width/2, height/2, 15, 15);
}

void exit() {
  m.motorStop();
  println("exit");
  System.exit(0);
}
void mousePressed() {
  if ((mouseY< btn.y+btn.h) && (mouseY>btn.y)
    && (mouseX< btn.x+btn.w) && (mouseX>btn.x)) { // the mouse click the button
    if (isMotorRun) {
      isMotorRun = false;
      btn.setBgColor(255, 0, 0);
      btn.setText("STOP");
      m.motorStop();
    } else {
      isMotorRun = true;
      btn.setBgColor(0, 255, 0);
      btn.setText("RUN");
      m.motorRestart();
    }
  }
}
void titleAndSiteInfo() {
  fill(0);
  textAlign(CENTER);    //set the text centered
  textSize(40);        //set text size
  text("Motor", width / 2, 40);    //title
  textSize(16);
  text("www.freenove.com", width / 2, height - 20);    //site
}
```

Code, first define 4 GPIO connected to the motor, the BUTTON class object and SteppingMotor class object.

```
int[] pins = {18, 23, 24, 25};    //connect to motor phase A,B,C,D pins
BUTTON btn;    //BUTTON Object, For controlling the direction of motor
SteppingMotor m = new SteppingMotor(pins);
```

In the function setup(), initialize the Button, start thread of stepping motor, and set the rotating speed of the virtual motor.

```
void setup() {
  size(640, 360);
  btn = new BUTTON(45, height - 90, 50, 30);   //define the button
  btn.setBgColor(0, 255, 0);  //set button color
  btn.setText("RUN");         //set button text
  m.motorStart();             //start motor thread
  rotaSpeed = 0.002 * PI;  //virtual fan's rotating speed
}
```

In the function draw(), first draw button, and calculate the position of the virtual motor and show the current rotating direction.

```
  background(255);
  titleAndSiteInfo();  //title and site information
  btn.create();       //create the button
  if (isMotorRun) {   //motor is runnig
    fill(0);
    textAlign(LEFT,BOTTOM);
    textSize(20);
    if (m.dir == m.CW) {
      text("CW",btn.x,btn.y);     //text "CW "
      rotaPosition+=rotaSpeed;
      if (rotaPosition>=TWO_PI) {
        rotaPosition = 0;
      }
    } else if (m.dir == m.CCW) {
      text("CCW",btn.x,btn.y);  //text "CCW"
      rotaPosition-=rotaSpeed;
      if (rotaPosition<=0) {
        rotaPosition = TWO_PI;
      }
    }
  }
```

And then determine whether the stepping motor is in stoping state according to the value of “m.steps”. If it is true, change the rotation direction of motor, and drive the motor to rotate a circle.

```
  if (m.steps<=0) {       //if motor has stopped,
    if (m.dir == m.CCW) {         //change the direction ,restart.
      m.moveSteps(m.CW, 1, 512);
    } else if (m.dir == m.CW) {
      m.moveSteps(m.CCW, 1, 512);
    }
```

```
    }
```

Finally draws the virtual fan.

```
    drawFan(rotaPosition);
```

About class SteppinMotor：

class SteppinMotor

This is a custom class that defines some methods to drive the four-phase stepping motor.

```
public SteppingMotor(int[] mPins)
```

Constructor, the parameter for the GPIO pin connected to the stepping motor.

```
public void motorStart()
```

Start a stepping motor thread, then the thread is in the state of wait, waiting for a notify to wake up.

```
public void moveSteps(int idir, int ims, int isteps)
```

Used to drive stepping motor rotation, the parameter “idir” for the direction which can be set as CW/CCW. The parameter “ims” is the delay (with unit ms) between each two steps of stepping motor. The higher the value of “ims”, the lower the speed of stepping motor. Parameter “isteps” specifies the number of rotating steps of the stepping motor. As for four-phase stepping motor, four steps per cycle, if set isteps=1, that is, specify the stepping motor to rotate four steps.

```
public void motorStop()
```

Stop stepping motor.

```
public void motorRestart()
```

Resatart to drive stepping motor.

Chapter 17 Matrix Keypad

In this chapter, we will learn how to use matrix keyboard.

Project 17.1 Calculator

In this project, we will use a matrix keyboard to make a calculator.

Component List

Raspberry Pi 3B x1 GPIO Expansion Board & Wire x1 BreadBoard x1	4x4 Matrix Keypad x1
Jumper M/M x8 	

Component knowledge

4x4 Matrix Keypad

First, review the matrix keyboard sequence to facilitate building circuit.

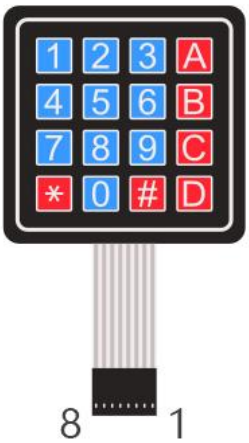

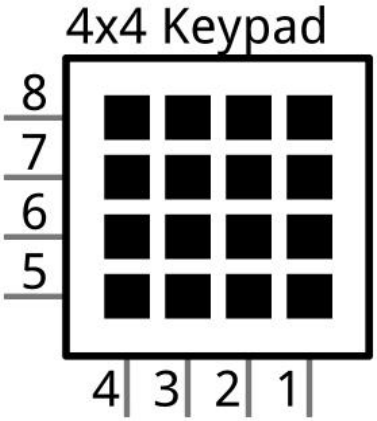

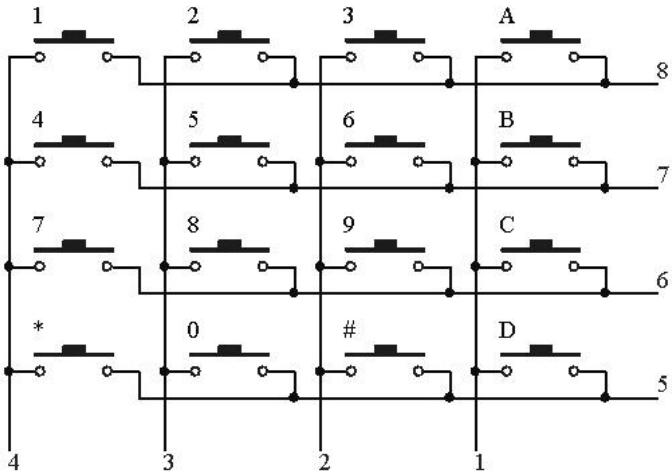

Circuit

Schematic diagram

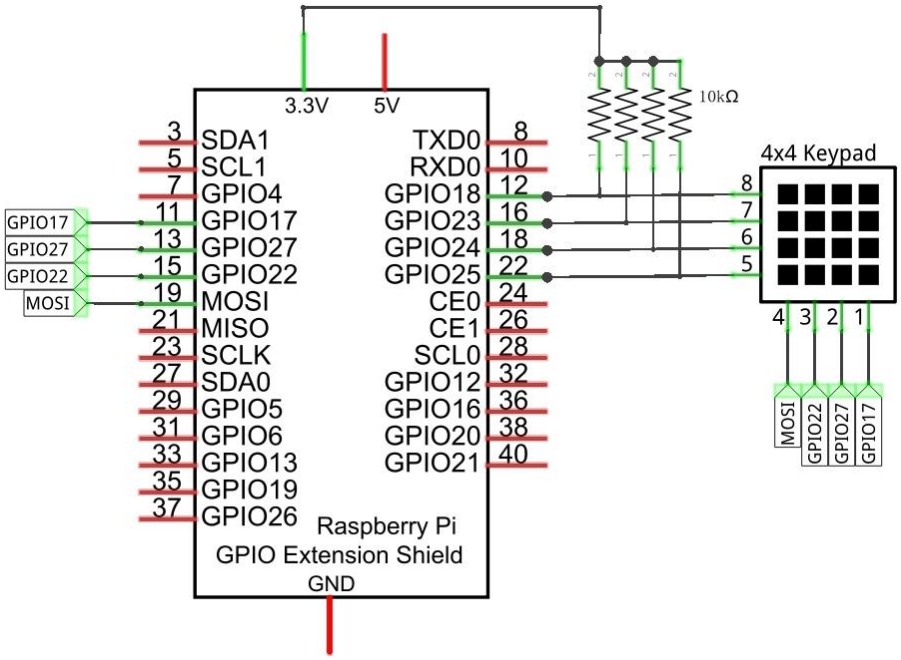

Hardware connection

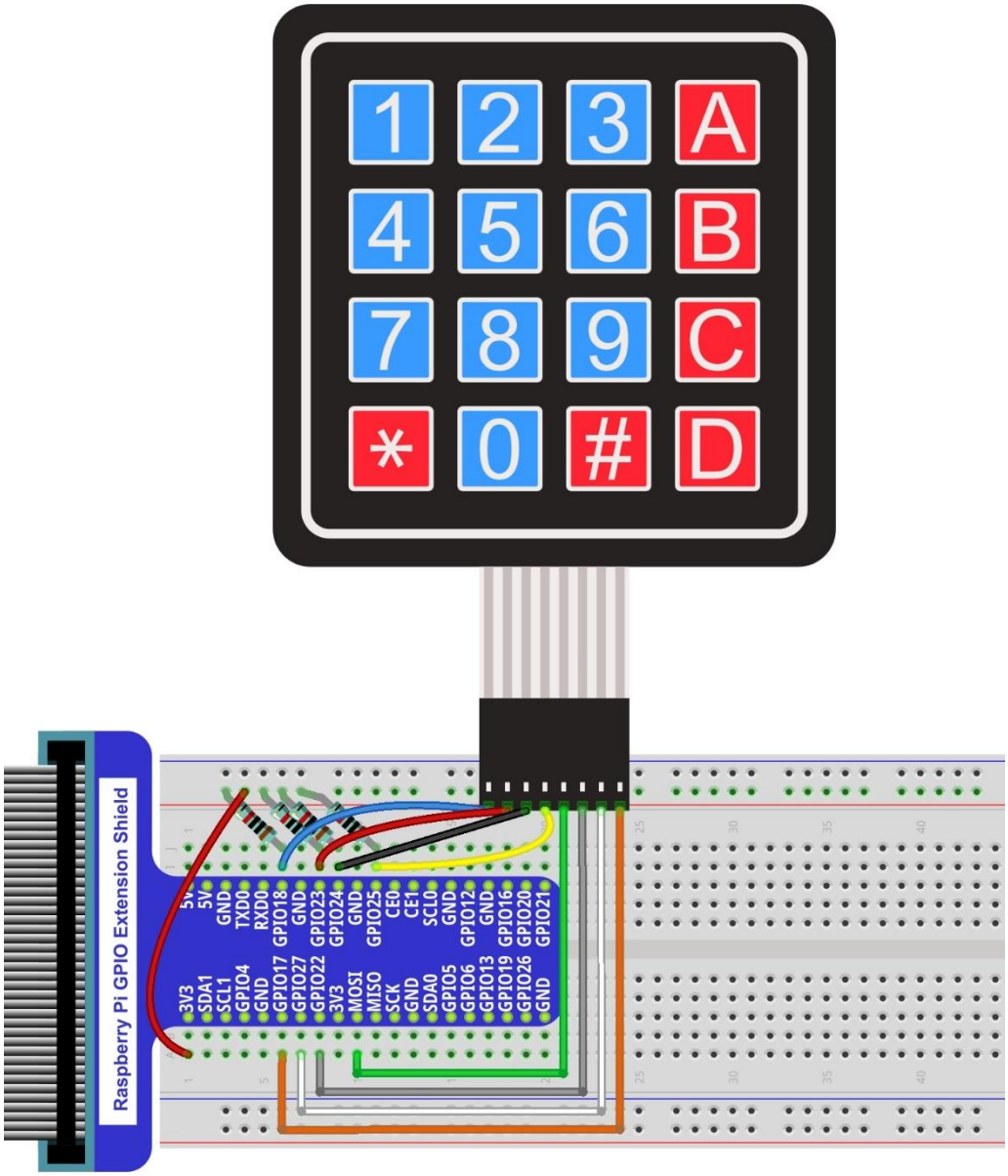

Sketch

Sketch 17.1.1 Calculator

First observe the running result of the sketch, and then analyze the code.

1. Use Processing to open the file Sketch_17_1_1_Calculator.

```
processing
Freenove_RFID_Starter_Kit_for_Raspberry_Pi/Processing/Sketchs/Sketch_17_1_1_Calculator/Sketch_17_1_1_Calculator.pde
```

2. Click on "RUN" to run the code.

After the program is executed, Display Window shows the following interface, where the character "A, B, C, D, *, #" on the real Keypad is replaced by the character "+, -, *, /, C, =" on the virtual Keypad.

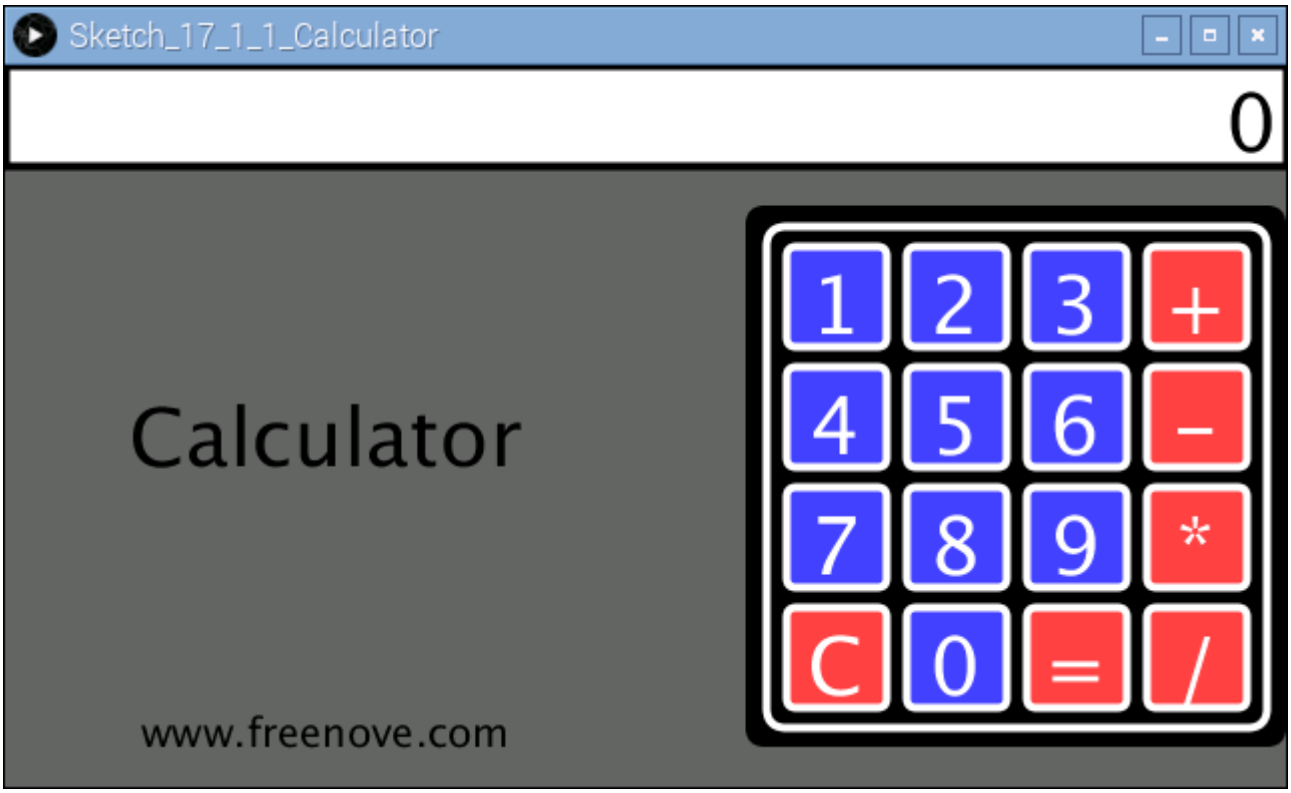

Calculator achieve the basic operation of add, subtract, multiply and divide. Button "C" means Clear, namely, clear the current content. When a button is pressed, the color of corresponding button on the virtual keyboard will be changed into green, which indicates that the button is pressed.

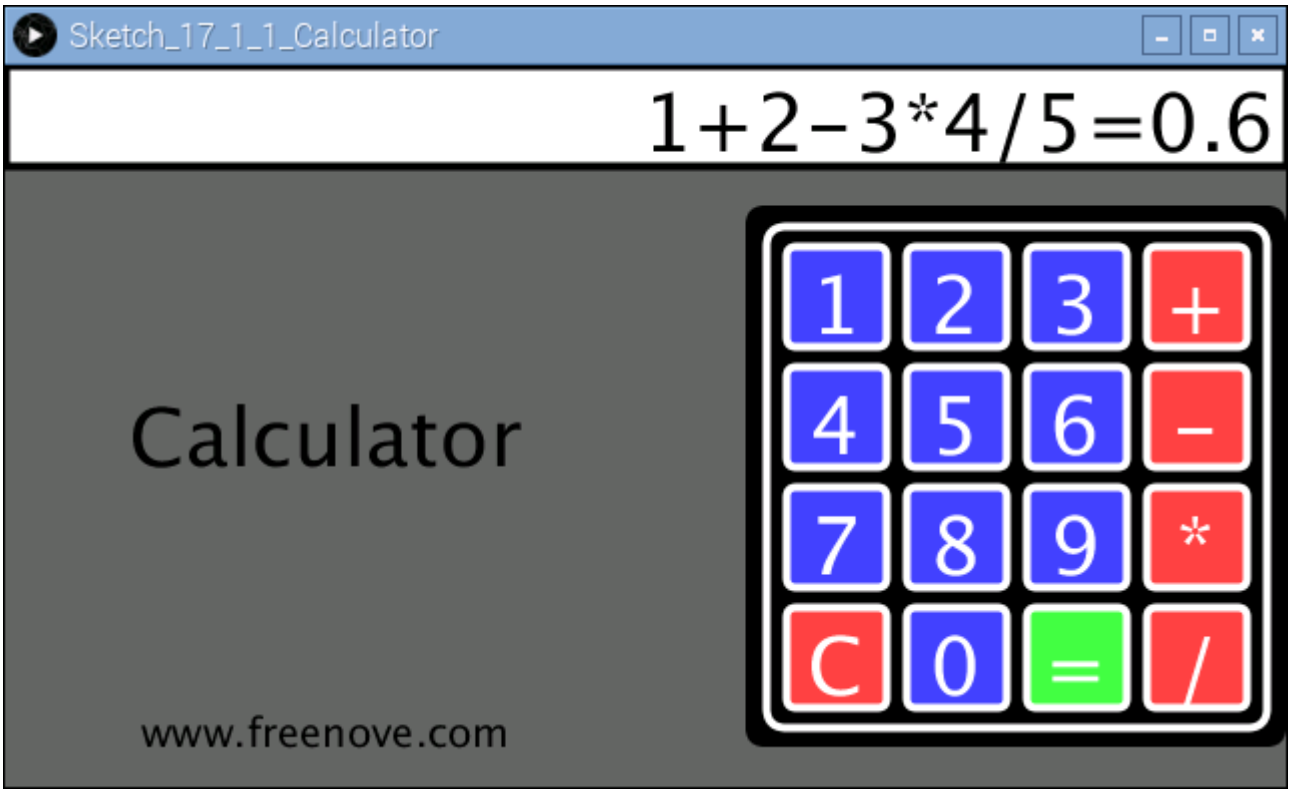

This project contains several code files, as shown below:

The following is program code:

```
import processing.io.*;

final static char[]  keys = {  //key code
  '1', '2', '3', '+',
  '4', '5', '6', '-',
  '7', '8', '9', '*',
  'C', '0', '=', '/'  };
final int[] rowsPins = {18, 23, 24, 25};  //Connect to the row pinouts of the keypad
final int[] colsPins = {10, 22, 27, 17};  //Connect to the column pinouts of the keypad
```

```
Keypad kp = new Keypad(keys, rowsPins, colsPins);    //class Object
Calculator cc = new Calculator(kp);    //class Object
void setup() {
  size(640, 360);
}
void draw() {
  background(102);
  titleAndSiteInfo();  //Tile and site information
  cc.process();    //Get key and processing
  drawDisplay(cc.contentStr);  //Draw display area and content
  drawKeypad(width-kpSize, 70);    //draw virtual Keypad
}
void titleAndSiteInfo() {
  fill(0);
  textAlign(CENTER);    //set the text centered
  textSize(40);        //set text size
  text("Calculator", width / 4, 200);    //title
  textSize(20);
  text("www.freenove.com", width / 4, height - 20);    //site
}
```

In the code, first define key code of the Keypad, and the GPIO connected to the Keypad. Then create a Keypad class object based on the information, and finally create a Calculator class object according to the Keypad class object.

```
final static char[]  keys = {  //key code
  '1', '2', '3', '+',
  '4', '5', '6', '-',
  '7', '8', '9', '*',
  'C', '0', '=', '/'  };
final int[] rowsPins = {18, 23, 24, 25};  //Connect to the row pinouts of the keypad
final int[] colsPins = {10, 22, 27, 17};  //Connect to the column pinouts of the keypad
Keypad kp = new Keypad(keys, rowsPins, colsPins);    //class Object
Calculator cc = new Calculator(kp);    //class Object
```

In draw(), use cc.process() to obtain the key code of Keypad and for processing. And then draw the display area and virtual Keypad.

```
void draw() {
  background(102);
  titleAndSiteInfo();  //Tile and site information
  cc.process();    //Get key and processing
  drawDisplay(cc.contentStr);  //Draw display area and content
  drawKeypad(width-kpSize, 70);    //draw virtual Keypad
}
```

About function drawDisplay() and drawKeypad():

void drawKeypad(int x, int y)
Used to draw a Keypad with (x, y) for the upper left corner.
void drawDisplay(String content)
The function at the top of the window to draw a calculator display area, and in the area of the right alignment display content.

About class Key：

class Key
This is a custom class that defines the associated attribute owned by a key. There are only some member variables and a constructor in this class.

About class Keypad：

class Keypad
This is a custom class that defines the methods to use keypad.
`public Keypad(char[] usrKeyMap, int[] row_Pins, int[] col_Pins)`
Constructor, the parameters are: key code of keyboard, row pins, column pins。
`public char getKey()`
Get the key code of the pressed key. If no key is pressed, the return value is '\0'.
`public void setDebounceTime(int ms)`
Set the debounce time. And the default time is 10ms.
`public void setHoldTime(int ms)`
Set the time when the key holds stable state after pressed.
`public boolean isPressed(char keyChar)`
Judge wether the key with code "keyChar" is pressed.
`public char waitForKey()`
Wait for a key to be pressed, and return key code of the pressed key.
`public int getState()`
Get state of the keys.
`boolean keyStateChanged()`
Judge whether there is a change of key state, then return True or False.

About class Calculator：

class Calculator
This is a custom class that defines the rules and calculating methods of the calculator.
`String contentStr = "";`
Member variable that saves the current processing results of the calculator, which will be directly displayed in the display area.
`public Calculator(Keypad kp)`
Constructor, the parameter for the Keypad class object.
`public void process()`
Gets the key code of the key, and makes the corresponding judgment and processing. The Processing results are stored in the member variable “contentStr”.
`public double parse(String content)`
This is the core of the calculator. Its function is to parse a string of four fundamental operations and return a double type of value. For example, enter a string "1+2-3*4/5", then return value of 0.6.

App 1 Oscilloscope

We have used the PCF8591 to read the voltage of potentiometer to realize function of the voltmeter, before. In this chapter, we will make a more complex virtual instrument, oscilloscope. Oscilloscope is a widely used electronic measuring instrument. It can get the electrical signals not directly observed into visible image to facilitate the analysis and study of various electrical signals change process.

App 1.1 Oscilloscope

Now, let's make an oscilloscope.

Component List

Raspberry Pi 3B x1 GPIO Extension Board & Wire x1 BreadBoard x1		Jumper M/M x16
Rotary potentiometer x1 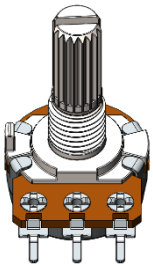	PCF8591 x1 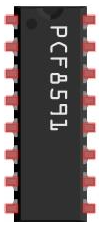	Resistor 10kΩ x2

Circuit

Note that the power supply voltage of PCF8591 in this circuit is 5V.

Schematic diagram

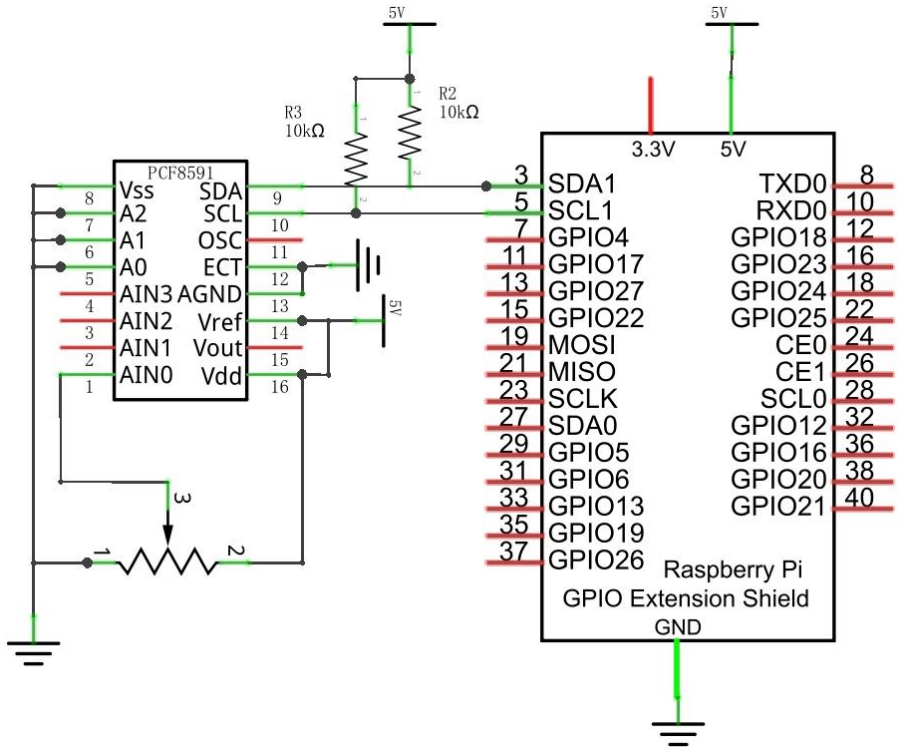

Hardware connection

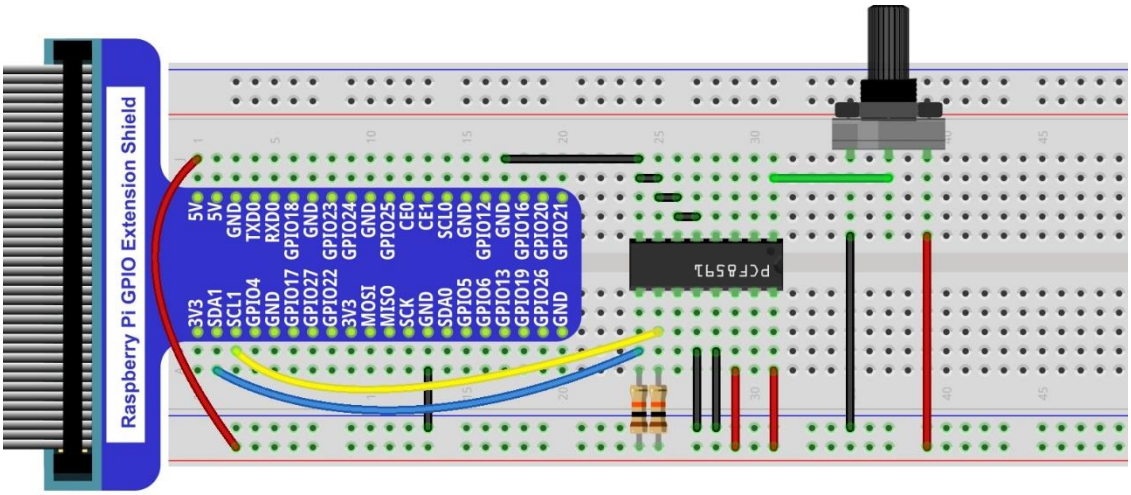

Sketch

Sketch 1.1.1 Oscilloscope

1. Use Processing to open the file Sketch_01_1_1_ Oscilloscope.

```
processing
Freenove_RFID_Starter_Kit_for_Raspberry_Pi/Processing/Apps/App_01_1_1_Oscilloscope/App_01_1_1_Oscilloscope.pde
```

2. Click on "RUN" to run the code.

After the program is executed, Display Window display as below. Rotating potentiometer can make following waveform.

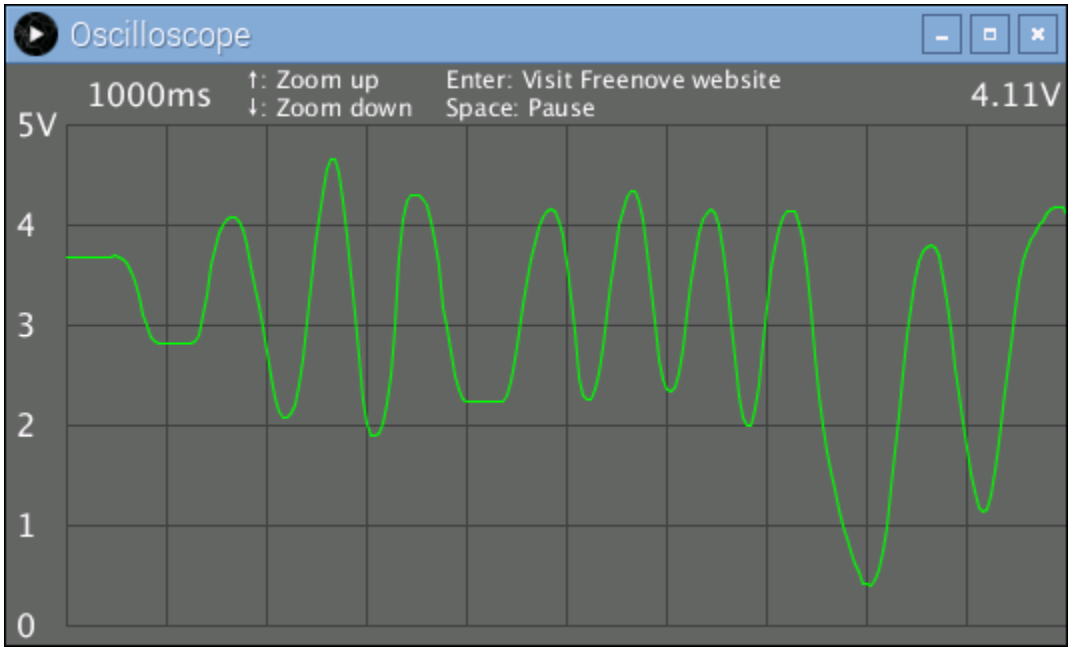

The left side of the software interface is a voltage scale, which is used to indicate the voltage of the waveform. The "1000ms" on top left corner is the time of a square, and you can press "↑" and "↓" key on keyboard to adjust it.

The "0.00V" on top right corner is the voltage value of current signal.

You can press the space bar on keyboard to pause the display waveform, which is easy to view and analysis.

We believe that with the help of this oscilloscope, you can obtain more intuitive understanding of the actual work of some electronic circuits. It will help you complete the project and eliminate the trouble. You can export this sketch to an application used as a tool.

App 2 Control Graphics

In this chapter, we will use potentiometer to make the graphics change in Processing.

App 2.1 Ellipse

This project uses two potentiometers to control the size and shape of an ellipse respectively.

Component List

Raspberry Pi 3B x1 GPIO Extension Board & Wire x1 BreadBoard x1		Jumper M/M x18
Rotary potentiometer x2 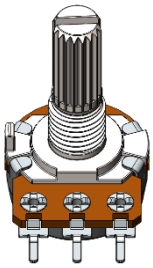	PCF8591 x1 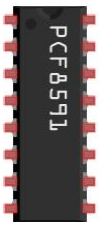	Resistor 10kΩ x2

Circuit

Schematic diagram

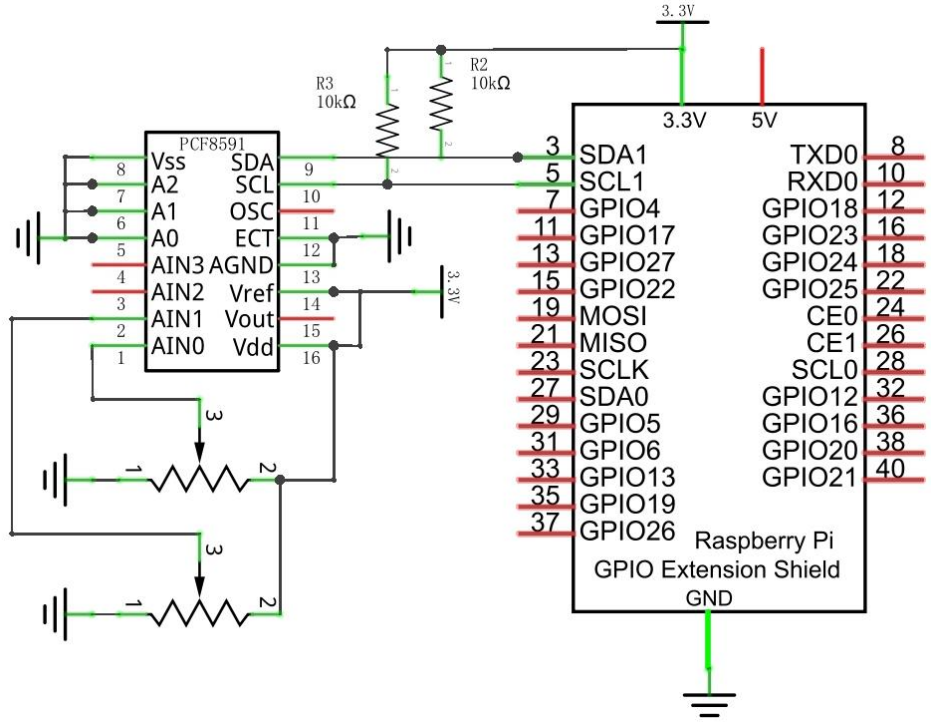

Hardware connection

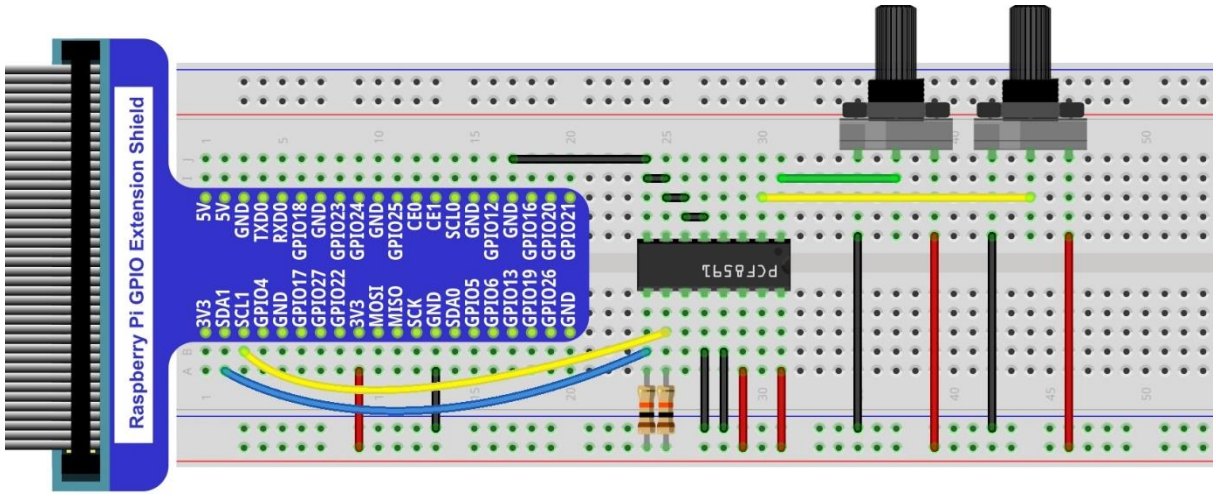

Sketch

Sketch 2.1.1 Ellipse

1. Use Processing to open the file Sketch_02_1_1_Ellipse.

```
processing
Freenove_RFID_Starter_Kit_for_Raspberry_Pi/Processing/Apps/App_02_1_1_Ellipse/App_02_1_1_Ellipse.pde
```

2. Click on "RUN" to run the code.

After the program is executed, Display Window displays as below. Rotating potentiometer can change the shape and size of the ellipse.

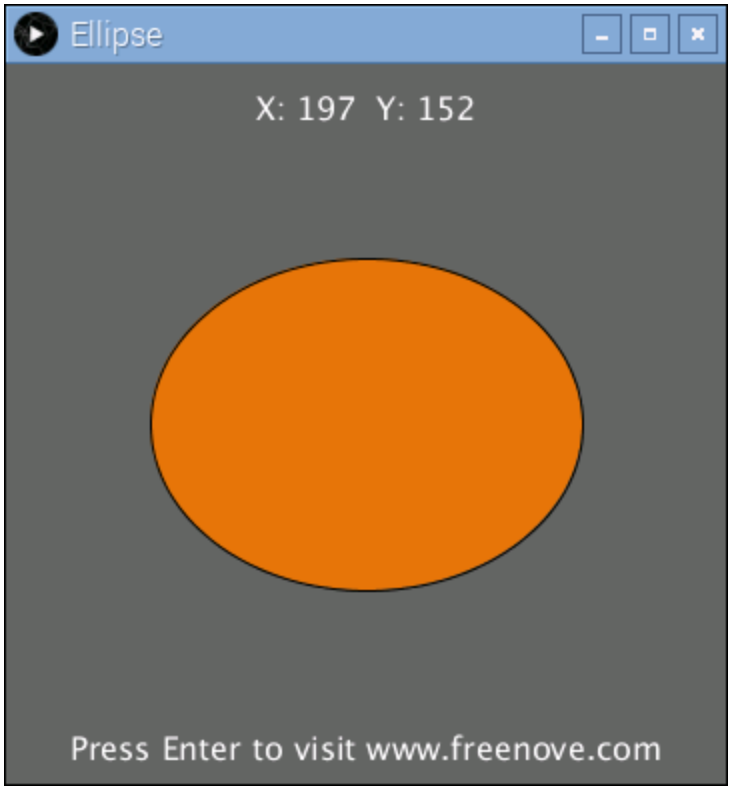

App 3 Pong Game

In this chapter, we will play a game, Pong Game.

App 3.1 Pong Game

Now, let's create and experience our own game.

Component List

Raspberry Pi 3B x1 GPIO Extension Board & Wire x1 BreadBoard x1		Jumper M/M x18
Rotary potentiometer x2 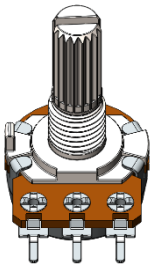	PCF8591 x1 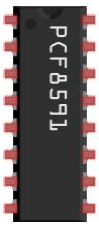	Resistor 10kΩ x2

Circuit

Schematic diagram

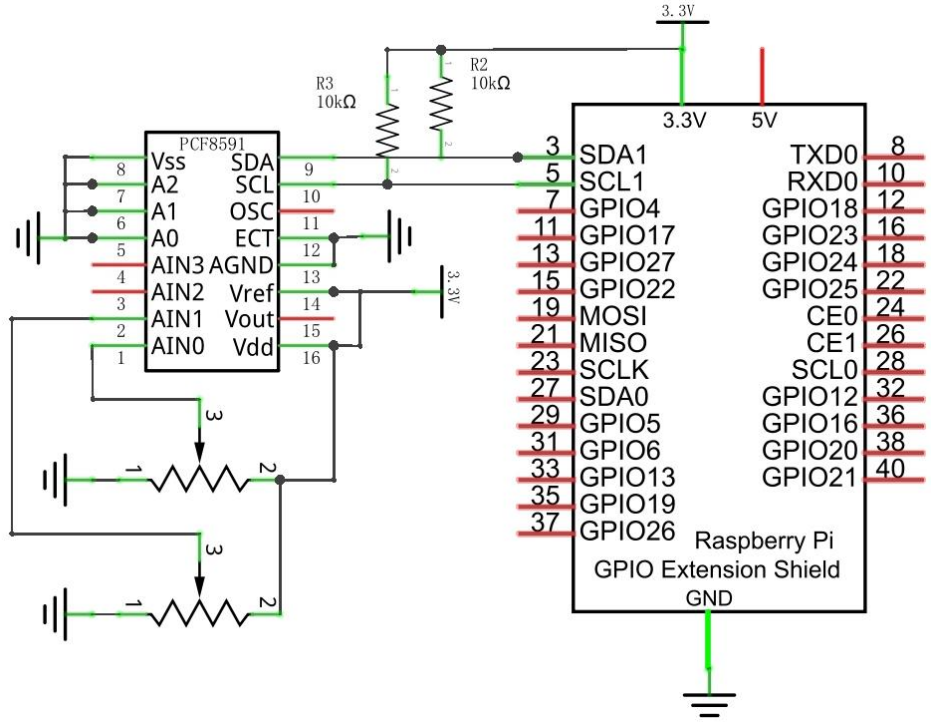

Hardware connection

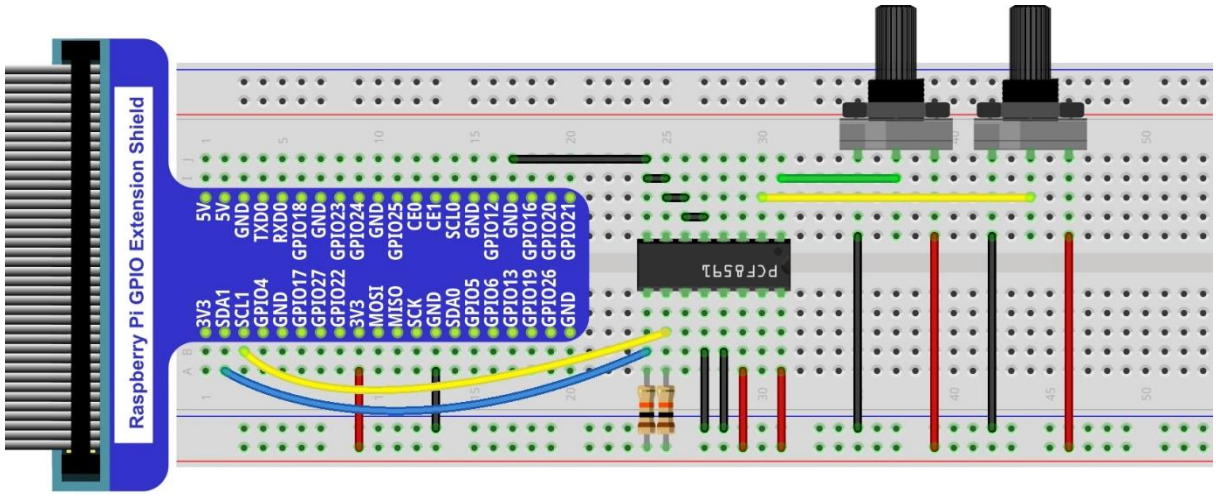

Sketch

Sketch 3.1.1 PongGame

1. Use Processing to open the file Sketch_03_1_1_PongGame.

```
processing
Freenove_RFID_Starter_Kit_for_Raspberry_Pi/Processing/Apps/App_03_1_1_PongGame/App_03_1_1_PongGame.pde
```

2. Click on "RUN" to run the code.

After the program is executed, Display Window displays as below.

Pressing the space bar keyboard can start the game. Then you can try to turn the potentiometer to control the movement of paddle:

Use potentiometer to control the movement of paddle to turn back the ball. The rules are the same as the classic Pong game:

The game will be over when one side gets three points. Pressing the space can restart the game:

You can restart the game by pressing the space bar at any time during the game.

App 4 Snake Game

In this chapter, we will play a classic game, snake.

App 4.1 Snake Game

Now, let's create and experience our own game.

Component List

Raspberry Pi 3B x1 GPIO Extension Board & Wire x1 BreadBoard x1	Resistor 10KΩ x4 	Push button x4
Jumper M/M x12 		

Circuit

Schematic diagram

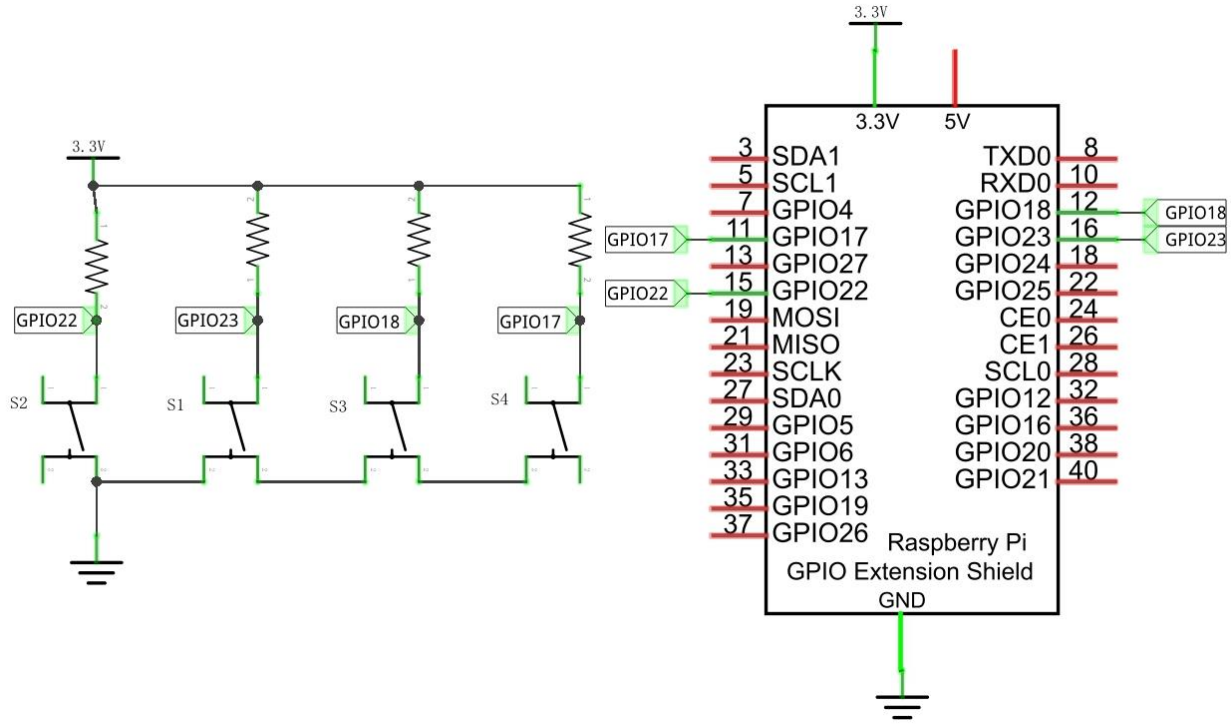

Hardware connection

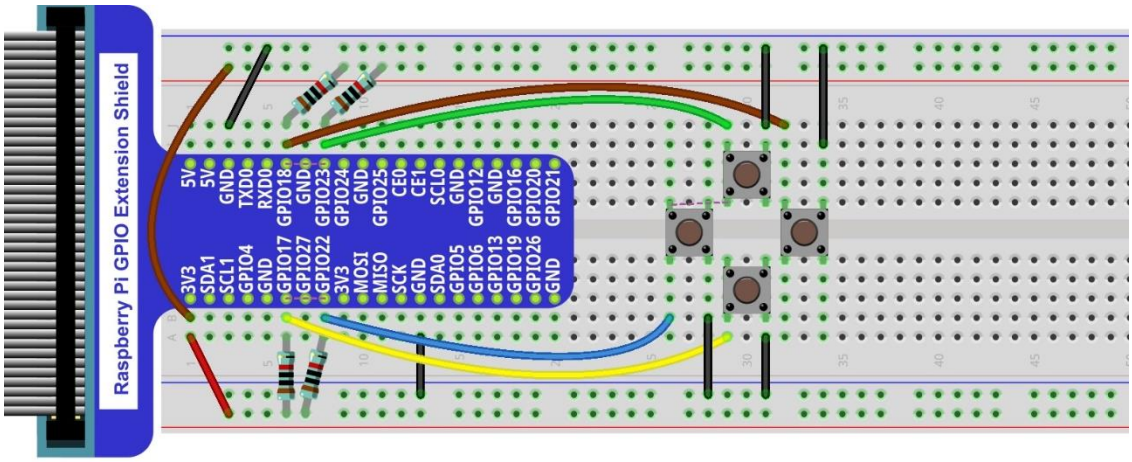

Sketch

Sketch 4.1.1 SnakeGame

1. Use Processing to open the file Sketch_04_1_1_SnakeGame.

```
processing
Freenove_RFID_Starter_Kit_for_Raspberry_Pi/Processing/Apps/App_04_1_1_SnakeGame/App_04_1_1_SnakeGame.pde
```

2. Click on "RUN" to run the code.

After the program is executed, Display Window displays as below.

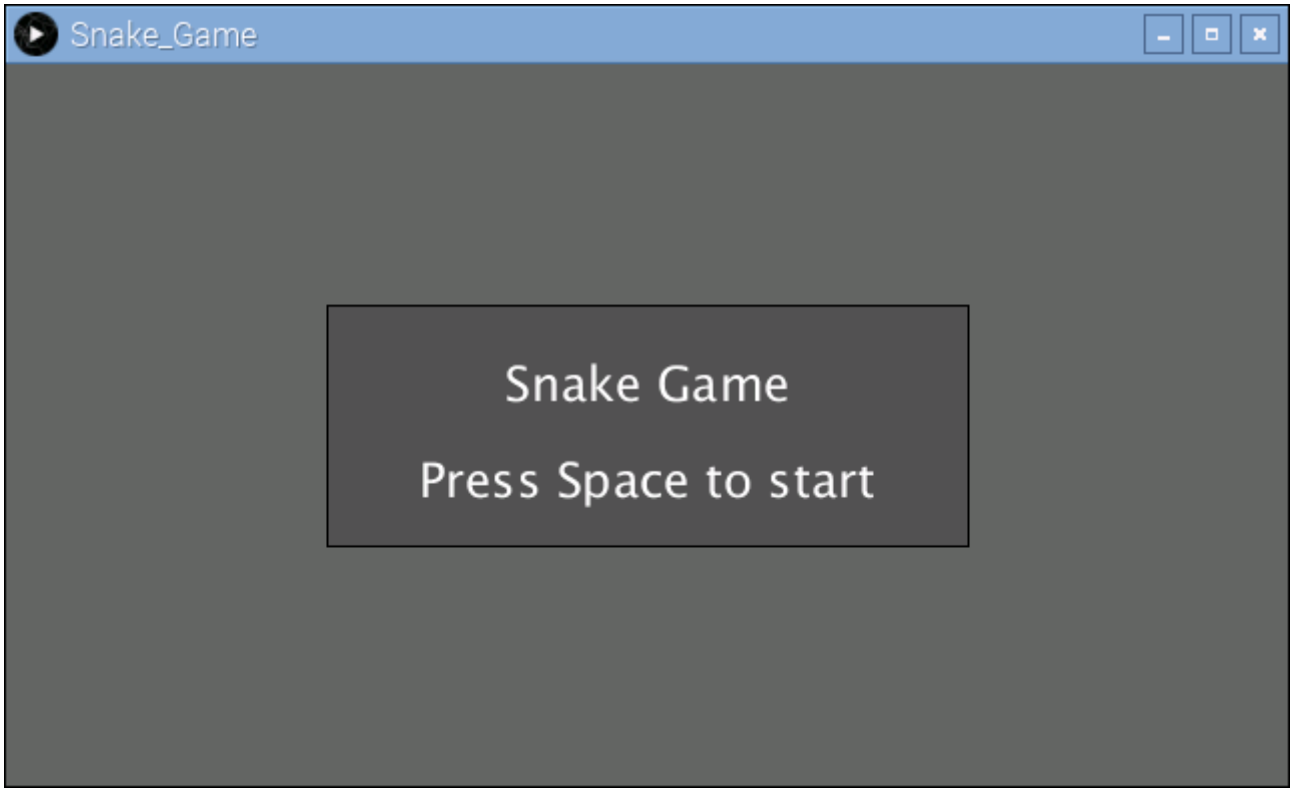

Pressing the space can start the game:

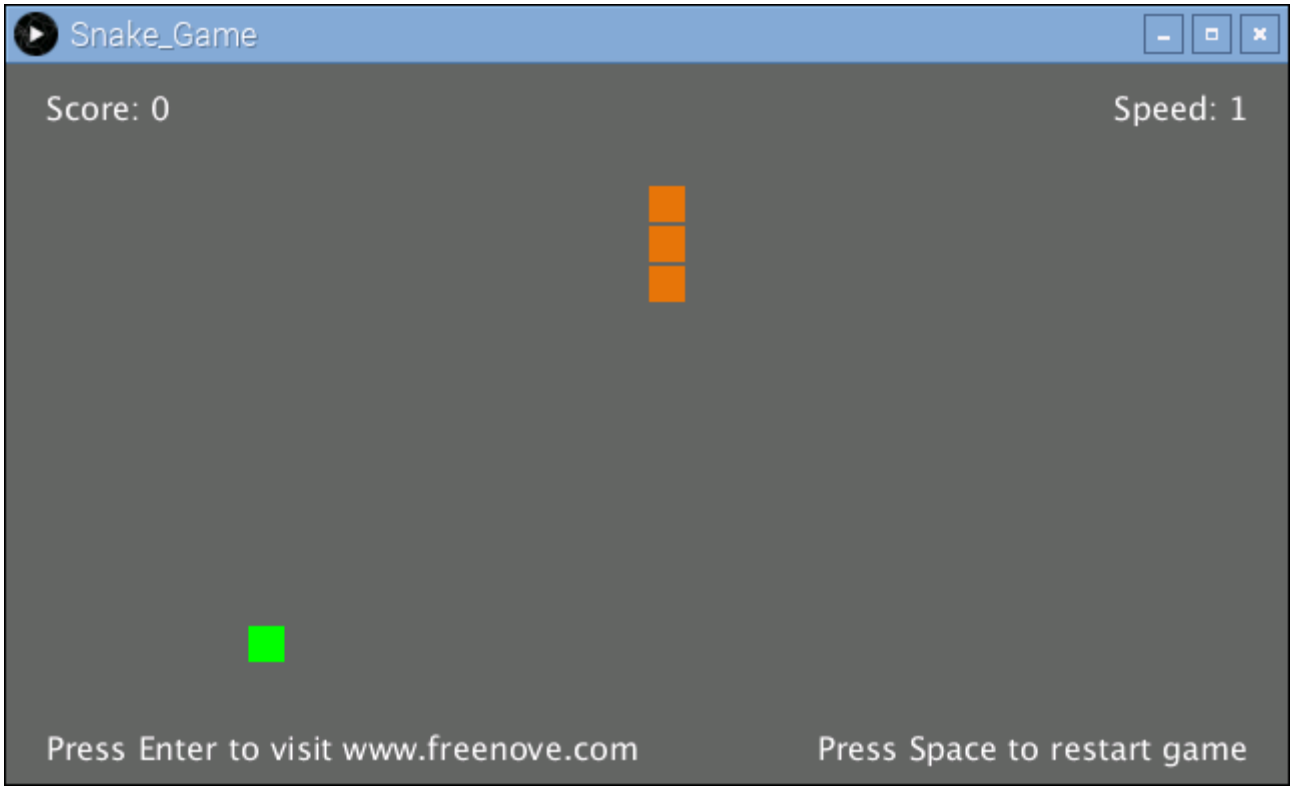

You can control the movement direction of the snake through the four buttons in circuit or four arrow keys on the keyboard. The rules are the same as the classic Snake game:

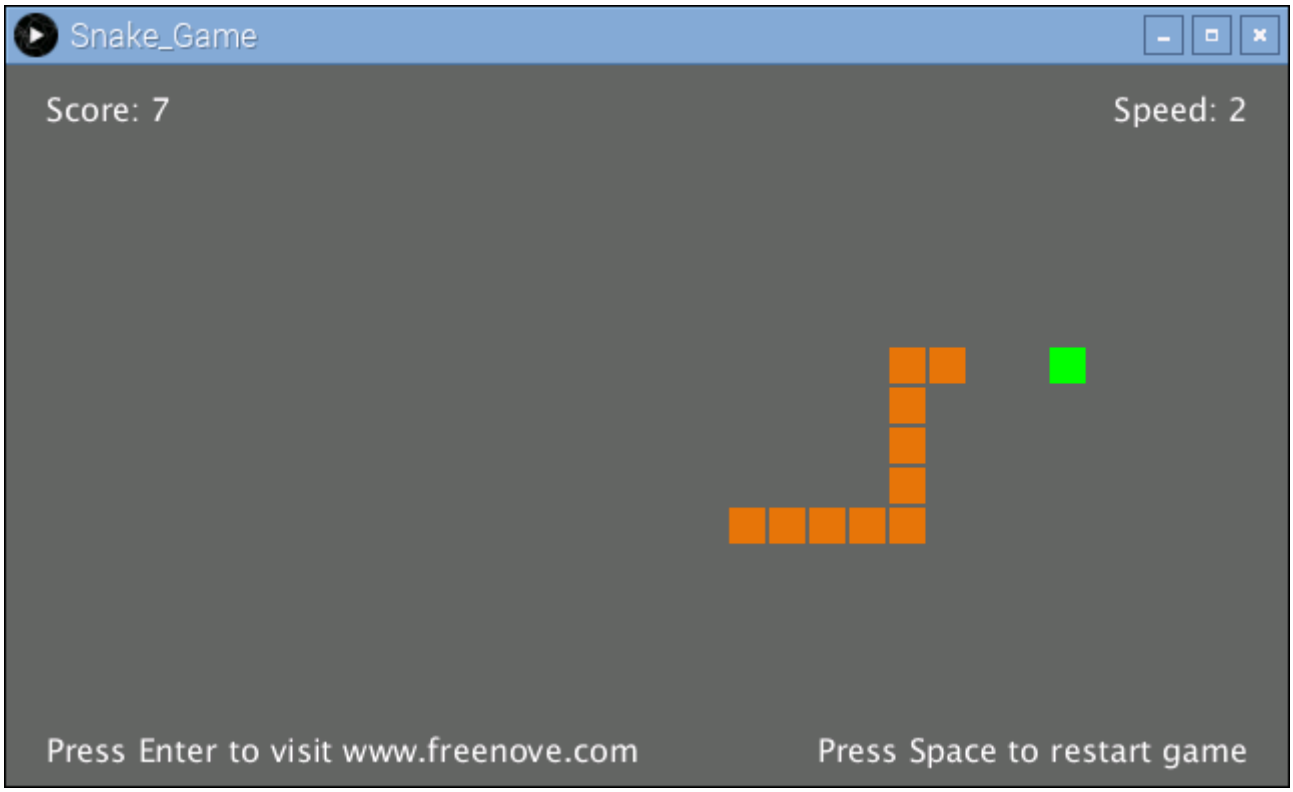

When game is over, pressing the space can restart the game:

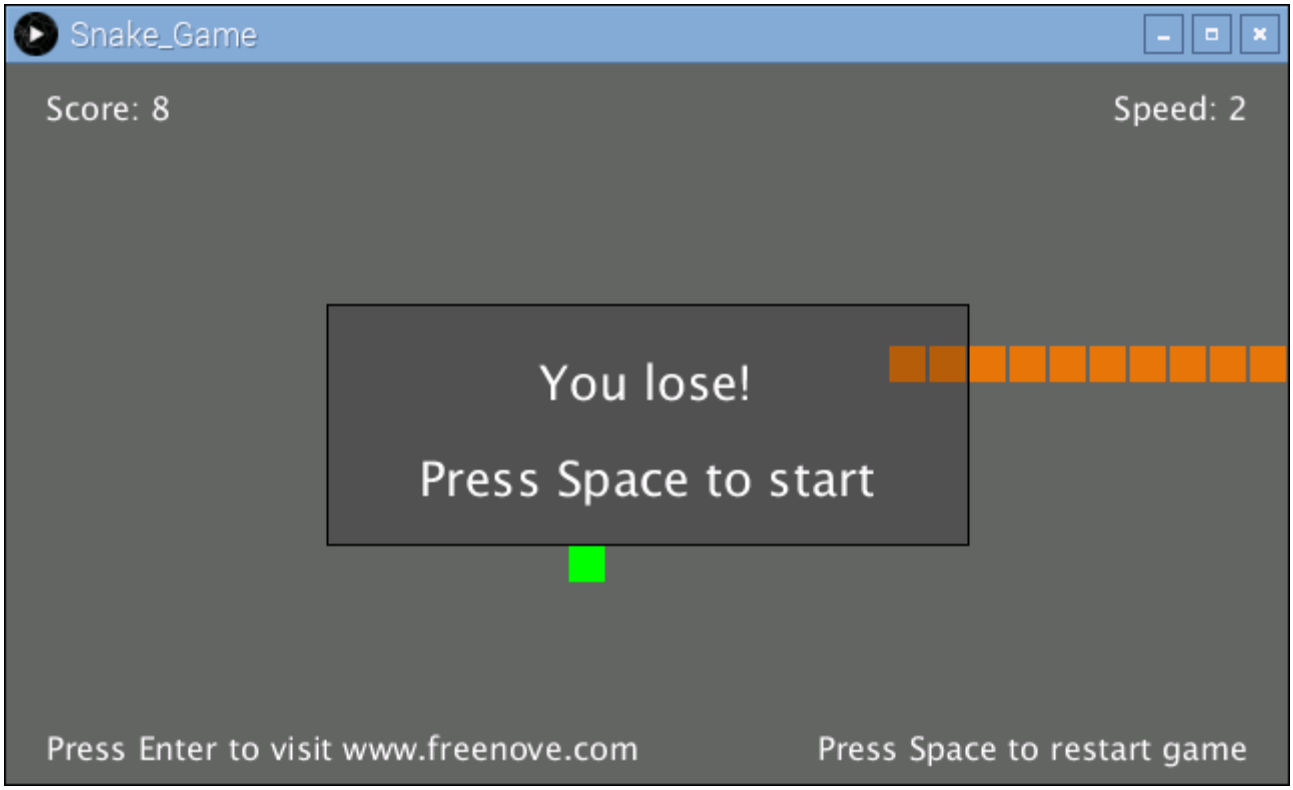

You can restart the game by pressing the space bar at any time during the game.

App 5 Tetris Game

In this chapter, we will play a game, tetris game.

App 5.1 Tetris Game

Now, let's create and experience our own game.

Component List

Raspberry Pi 3B x1 GPIO Extension Board & Wire x1 BreadBoard x1	Resistor 10KΩ x4 	Push button x4
Jumper M/M x12 		

Circuit

Schematic diagram

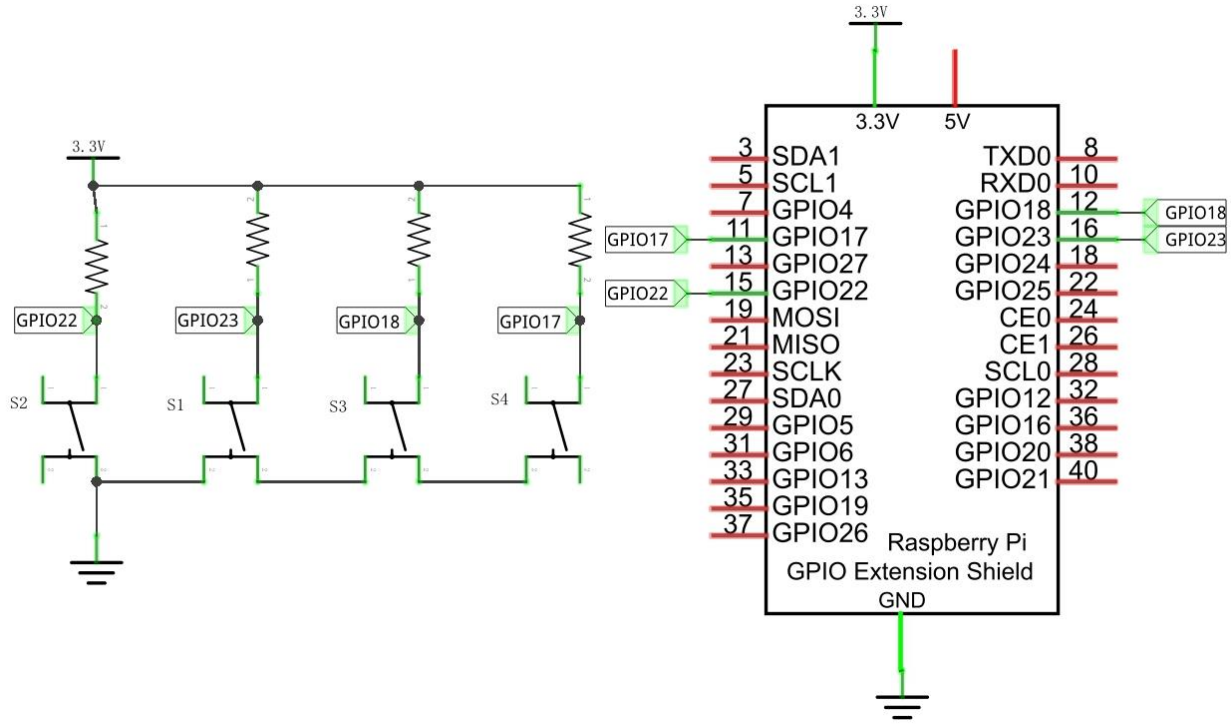

Hardware connection

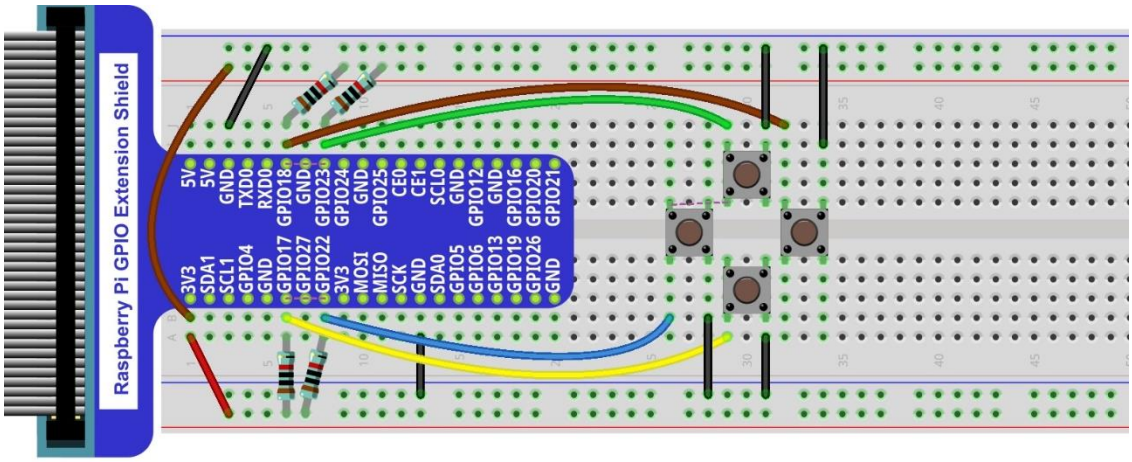

Sketch

Sketch 5.1.1 TetrisGame

1. Use Processing to open the file Sketch_05_1_1_TetrisGame.

```
processing
Freenove_RFID_Starter_Kit_for_Raspberry_Pi/Processing/Apps/App_05_1_1_TetrisGame/App_05_1_1_TetrisGame.pde
```

2. Click on "RUN" to run the code.

After the program is executed, Display Window displays as below.

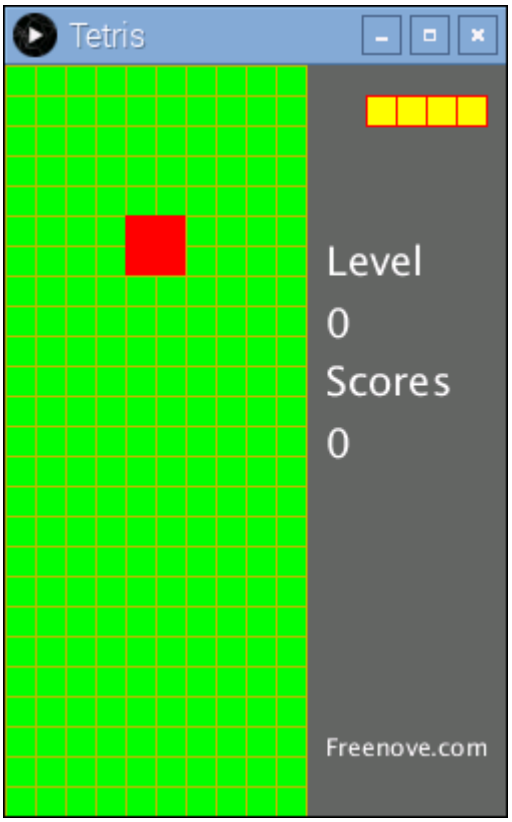

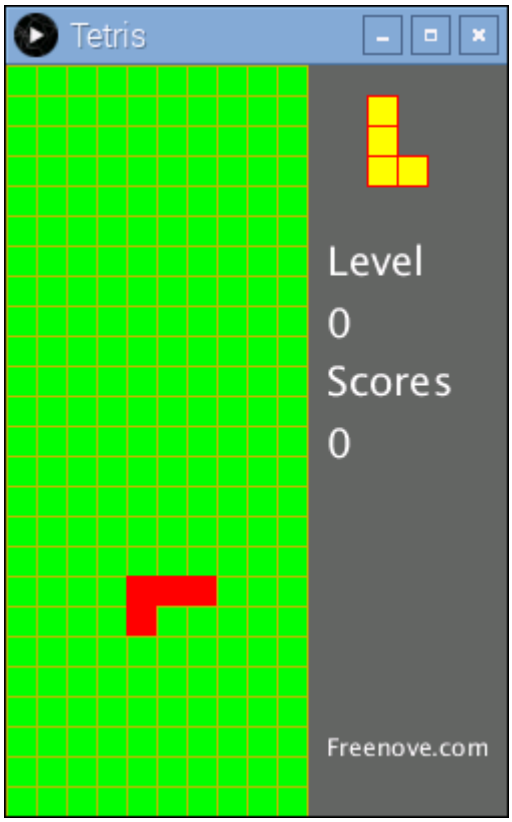

The left and right button in the circuit can control the moving of the falling block to left or right. And the button below can accelerate falling of the block. The button above is used for rotating of the block. Four direction keys on keboard can also be used to play the game.

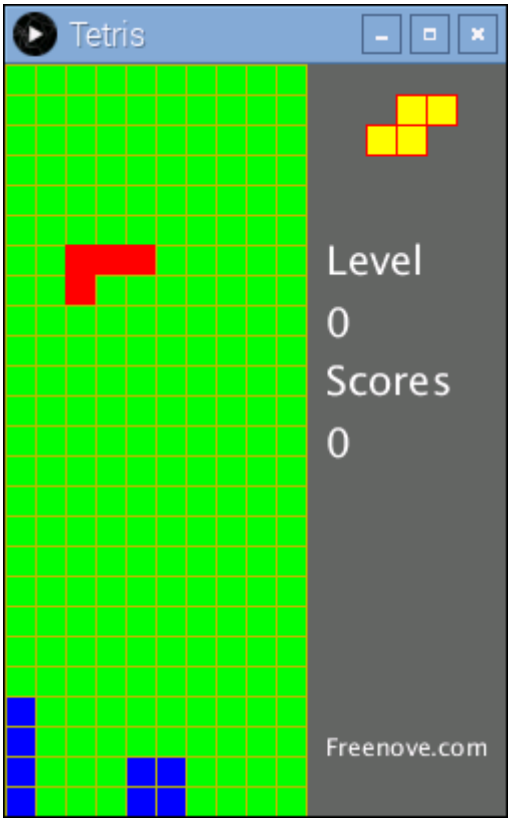

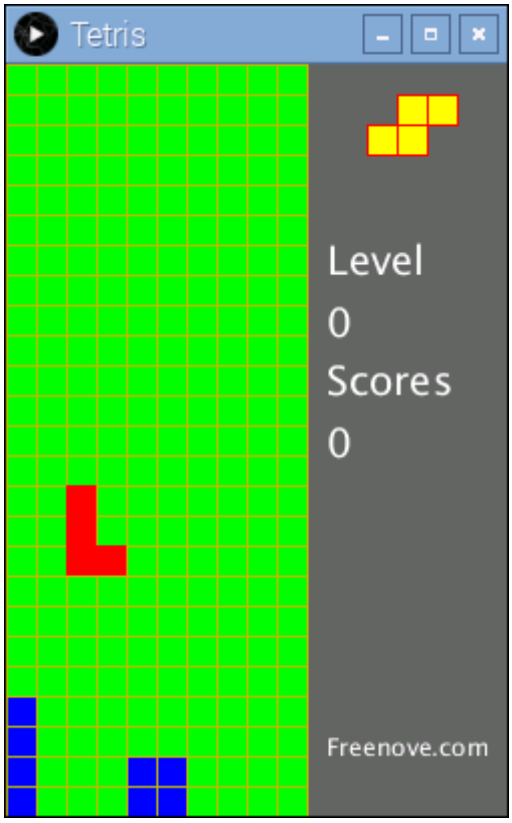

In the process of game, pressing the space bar on the keyboard can pause the game. The right side of the Display Window shows the next upcoming block, the current game speed and the current score. The more lines you eliminate once, the higher the scores. If you eliminate one line once, you will get 10 points. If you eliminate 4 lines once, you will get 70 points.

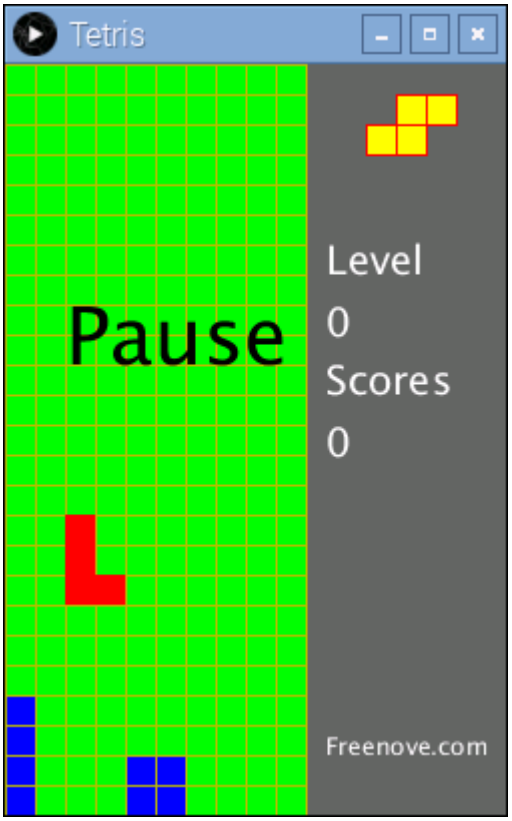

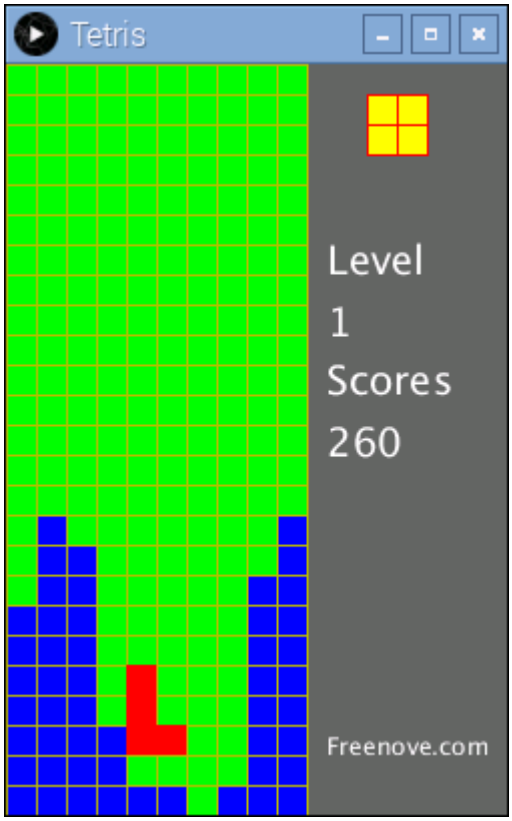

When the blocks are beyond the screen, the game is over. After the game is over, press the space bar to start a new game.

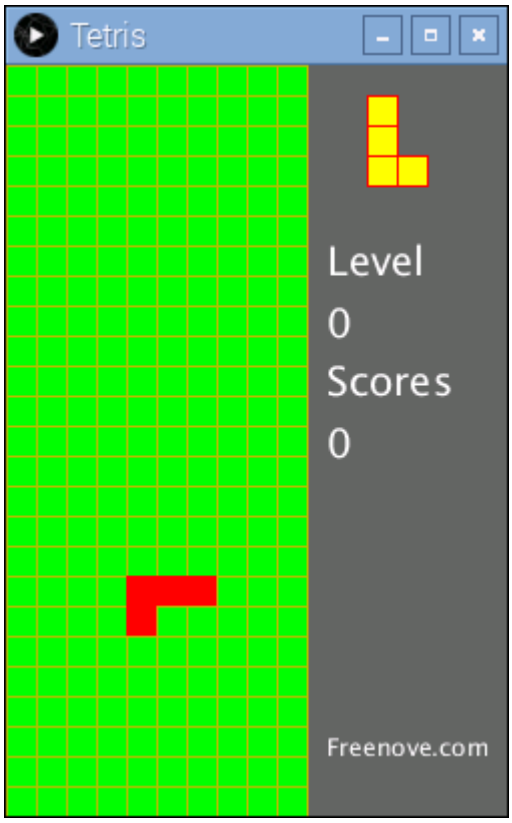

What's next?

Thanks for your reading.

This tutorial is all over here. If you find any mistakes, missions or you have other ideas and questions about contents of this tutorial or the kit and ect, please feel free to contact us, and we will check and correct it as soon as possible.

If you want to learn more about Arduino, Raspberry Pi, smart cars, robots and orther interesting products in science and technology, please continue to focus on our website. We will continue to launch cost-effective, innovative and exciting products.

Thank you again for choosing Freenove products.