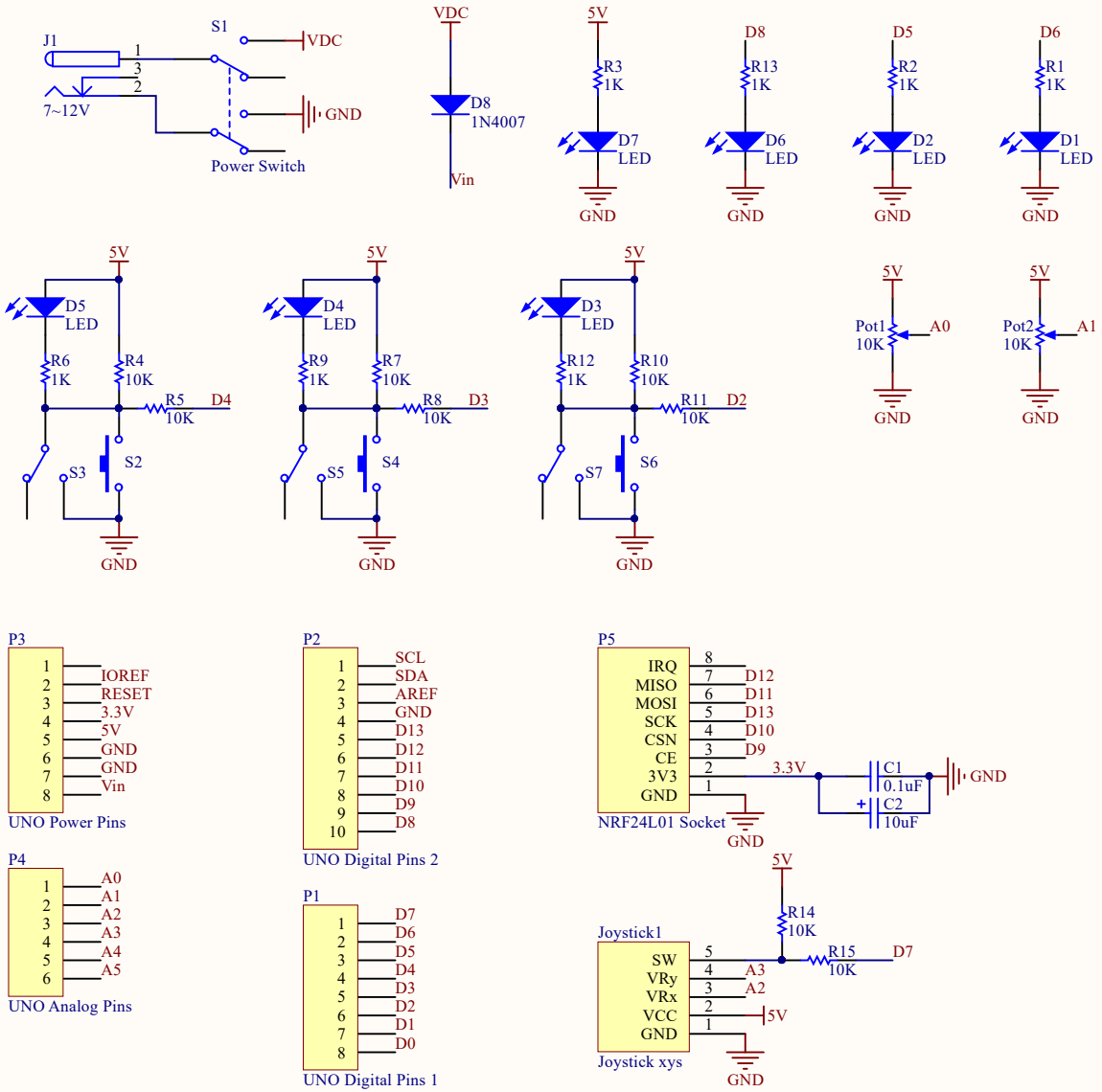

Copyright:

Designed by Freenove and released under:

Creative Commons Attribution-NonCommercial-ShareAlike 3.0 Unported License
(http://creativecommons.org/licenses/by-nc-sa/3.0/)

You can find a copy of the license in the folder.

This means you can use them on your own derived works, in part or completely. But NOT for the purpose of commercial use.

Freenove brand and logo are copyright of Freenove Creative Technology Co., Ltd. Cannot be used without formal permission.

Freenove Creative Technology Co., Ltd
http://www.freenove.com