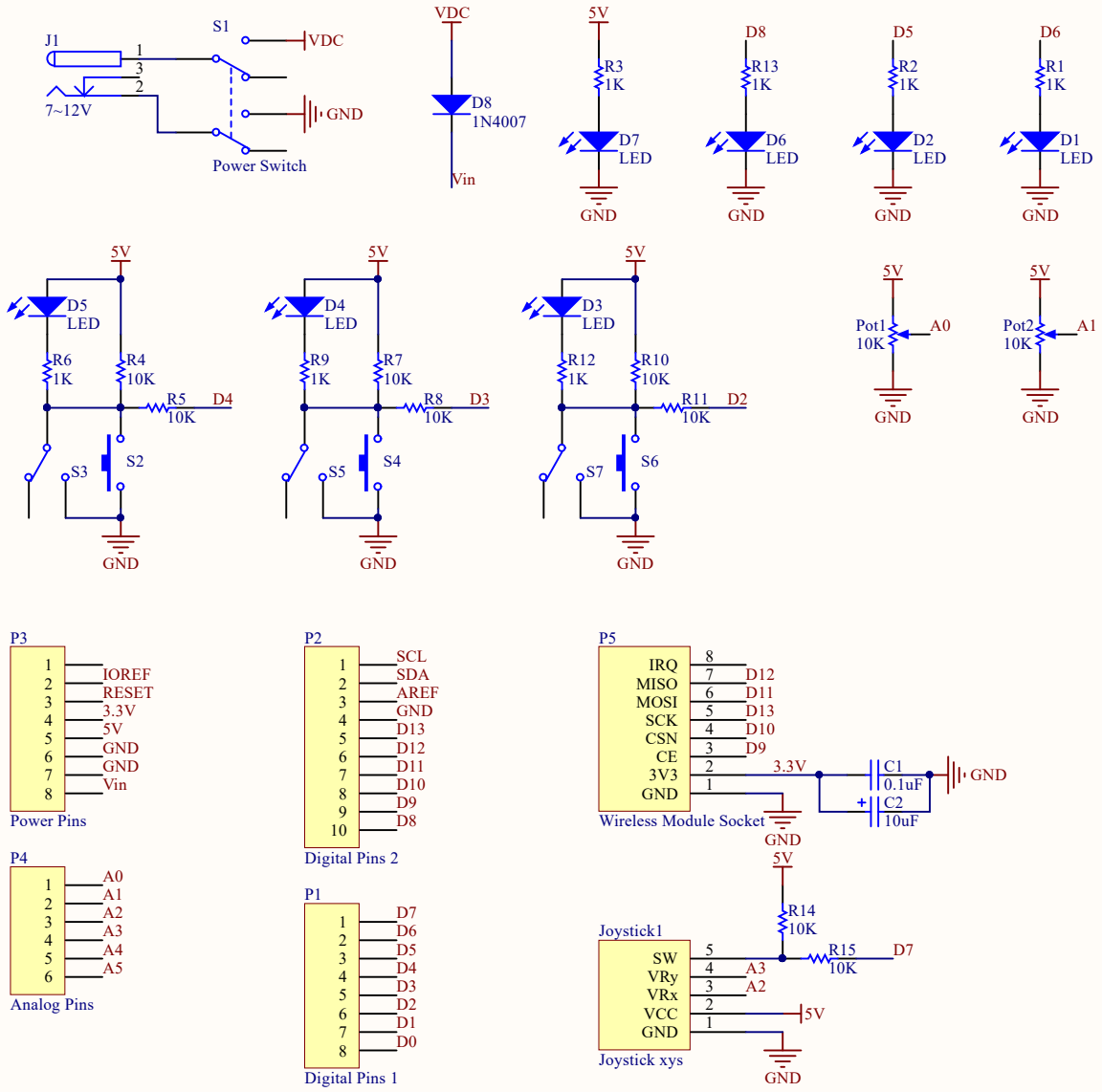

Copyright:
This design was originally provided by Freenove® and released under:
Creative Commons Attribution-NonCommercial-ShareAlike 3.0 Unported License
(http://creativecommons.org/licenses/by-nc-sa/3.0/)
You can find a copy of the license in the root folder which contains this file.
This means you can use them on your own derived works, in part or completely. But NOT for commercial use.
Freenove® brand and logo are trademarks of Freenove Creative Technology Co., Ltd. Must not be used without permission.
Freenove Creative Technology Co., Ltd
http://www.freenove.com