BETTER EDUCATIONAL CONSULTANCY

PRE-PRIMARY LEAVING EXAMINATION

SPOT ON SET TWO, 2022

MATHEMATICS

Time Allowed: 2 hours 30 minutes

Index No.

Random No.							Personal No.		

Candidate's Name: .....

Candidate's Signature: .....

School Random No. .....

District ID: .....

Read the following instructions carefully:

1. Do not write your **school** of **district** name anywhere on this paper.

2. This paper has two sections: **A** and **B**. Section **A** has **20** questions and section **B** has **12** questions.

3. Answer **all** questions. **All** answers to both sections **A** and **B** must be written in the spaces provided.

4. All answers **must** be written using a **blue** or **black** ball point pen or ink. Any work written in pencil will **not** be marked.

5. **No calculators** are allowed in the examination room

6. Unnecessary **changes** in your work and handwriting that cannot be easily read may lead to **loss of marks.**

6. Do not fill anything in the table indicated: **"for examiner's use only"** and boxes inside the question paper.

FOR EXAMINER'S USE ONLY

Qn. No	MARK	EXR'S NO.
1 – 5		
6 – 10		
11 – 15		
16 – 20		
21 – 22		
23 – 24		
25 – 26		
27 – 28		
29 – 30		
31 – 32		
TOTAL		

©2022 Better Educational Consultancy

Tel: 0779101164, 0750558616, 0706602422, 0775157214.

Turn over

SECTION A

1	Work out: $\begin{array}{r} 124 \\ -\ 18 \\ \hline \\ \hline \end{array}$	2	Write 55,012 in words.
3	Shade $(M \cap P)^{I}$ in the figure below; 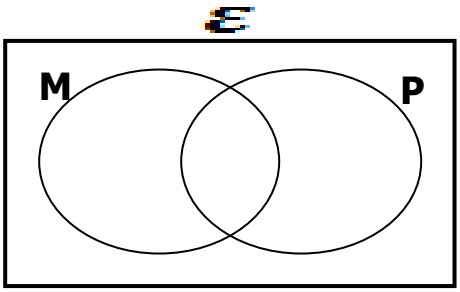	4	Find the next numbers in the sequence below; 1, 4, 2, 5, 3, _____, _____.
5	A trader bought 1½ dozen of books and sold each at sh. 2000 making a profit of sh. 4000. Find the cost price of all the books.	6	Find the length of the arc AB in the figure below: (Take π = 3.14) 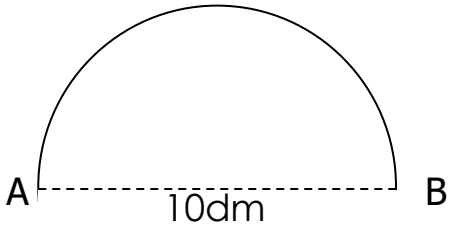
7	Find the square root of $3\frac{1}{16}$.	8	Solve for k: 2k - 5 = 13
9	Name the regular polygon whose interior angle is **135°**.	10	Round off **45.37** to the nearest whole number.

11	In the figure below find the value of **m.** 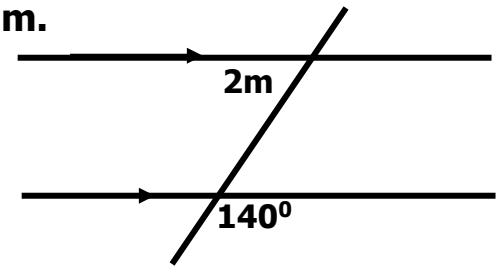 	12	Express **0025** hours in 12hr clock system.
13	In a box, there are 63 blue and red pens. The probability of picking a blue pen is $^{3}/_{7}$. How many red pens are in the box?	14	In the diagram below, drop a perpendicular from L to meet line segment ET at point B. 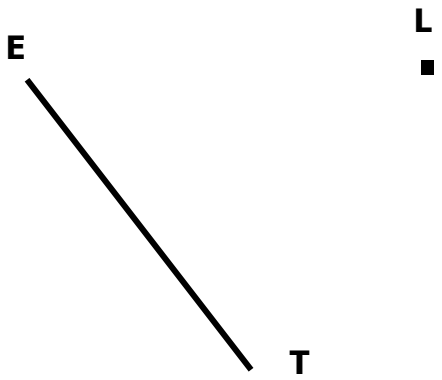
15	A lady borrowed sh. 180,000 from a village savings account at an interest rate of 10% per month. How much money did she pay back after 6 months?	16	Find the area of the shaded part in the figure below If AB = 6cm and AC = 15cm. 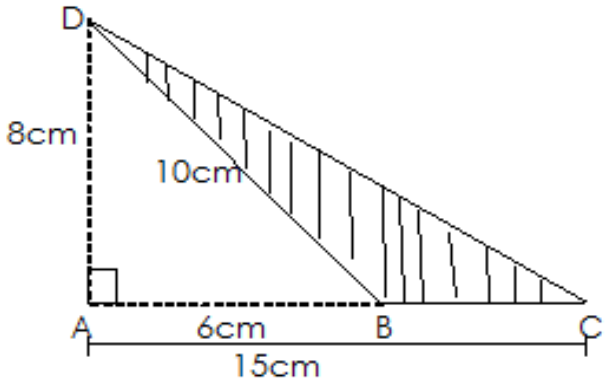

17	The bearing of town P from town Q is 200^0 .What is the bearing of town Q from P?	18	How many ¼ kg packets can be used to pack 12kg of sugar?
19	Using tallies, change $\mathbf{18_{ten}}$ to base five.	20	Express 200 metres as a ratio of one kilometer.

SECTION B (60 MARKS)

21	The previous electricity metre reading at Kato's meter box was taken as **08476.** The new metre reading is **08511.**		
a	How many units of electricity did Kato consume? **(2 Marks)**	b	If the cost of each unit is sh. 800, calculate the amount of money to be paid by Kato if VAT of 18% is levied on the total cost. **(2 Marks)**
22	In a certain village, 40 farmers rear cows (C), K farmers rear rabbits (R) only, **K + 2** farmers rear both cows and rabbits while **2K** rear neither rabbits nor cows. a). Use the above information to complete the Venn diagram below correctly		

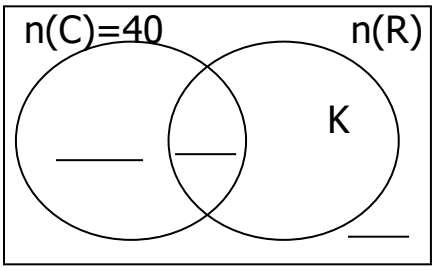

(2 Marks)

b If 30 farmers don't rear cows, how many farmers are in the whole village?

(3 Marks)

23 The table below shows the marks scored by P.6 pupils in a certain test.

Marks scored	55	70	40	80
No. of pupils	**x**	4	3	1

a If 5pupils score below 70, how many pupils sat for the test altogether?

(2 Marks)

b Work out the mean.

(2 Marks)

c What was the modal frequency?

(1 Mark)

24 a) A mother is thrice as old as her son. In five years' time, the ratio of the mother's age to the son's age will be 7:3 respectively. How old is each of them now?

(4 Marks)

b) Solve the inequality: $^{-}6 \geq -3p > -9$ and give the solution set. **(2 Marks)**

25 The time table below shows how a bus moved from town P to S through different towns as shown in the table. Study it carefully and use it to answer questions that follow.

Town	Arrival	Departure
P		1000hrs
Q	1030hrs	1045hrs
R	1130hrs	1210hrs
S	1330hrs	

a For how long did the bus take to move from town Q to town R? **(1 Mark)**

b Change the arrival time at town S in 12hr clock time. **(2 Marks)**

c If the distance from town P to town S is 210km, calculate the average speed of the bus for the whole journey. **(2 Marks)**

26	The figure below shows a triangular card with a semi-circular part cut off. Calculate the area of the shaded part (take $\pi = \frac{22}{7}$) **(5marks)** 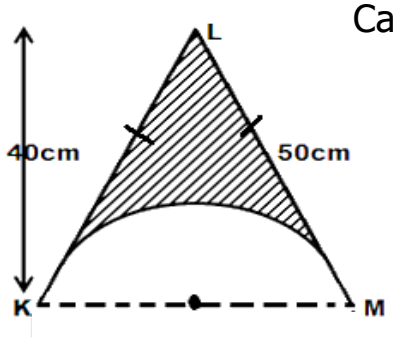
27	The pie-chart below shows a man's monthly expenditure. (a) Find the value of y **(2 Marks)** 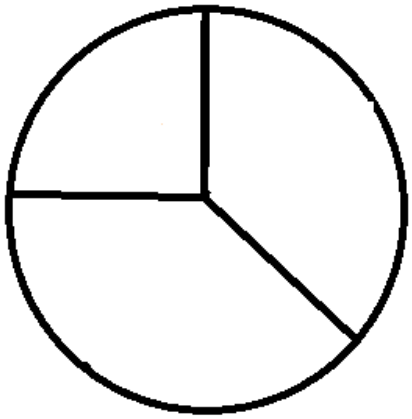
b	Given that he spends shs.120,000 more on savings than rent,Calculate his monthly salary. **(3 Marks)**

28	The tank below holds water to a certain level. Study it carefully and use it to answer the questions that follow. 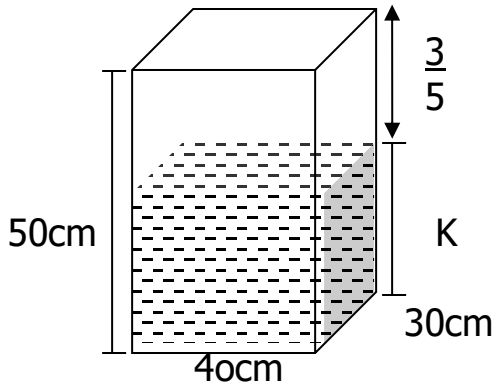 a) Find the value of K. **(3 Marks)**
	b) Find the amount of water needed to fill the tank in litres. **(3 Marks)**
29	A boy's stride is 50cm long. He makes 100 strides in only one minute. a) How long does he take to walk a distance of 4km? **(3 Marks)**

b) Calculate the boy's average speed for the whole journey. **(2 Marks)**

30 Below are the exchange rates at Bamboo forex bureau. Study it carefully.

Currency	**Buying rates**	**Selling rates**
US$	Ugsh. 3500	Ugsh. 3600
Ksh 1	Ugsh29	Ugsh30
1 British pound	Ugsh 4100	Ugsh 4200

a A trader had Ugsh. 504,000 which he exchanged for British pounds. How many pounds did he get? **(2 Marks)**

b If a radio costs Us$600, Find the cost of the same radio in Kenya shillings. **(3 Marks)**

31	Using a ruler, pencil and pair of compasses only, construct a parallelogram ABCD where AB= 6cm, angle DAB = 120° and AD = 4cm. Drop a perpendicular line from C to meet AB at X. **(5 Marks)**
32	A fruit vendor bought some oranges from a village fruit farmer. When she grouped them in heaps of 8,5oranges remained, when she put them in heaps of 7,only one orange remained and when she grouped them in heaps of 6, 5 oranges were left. How many oranges did the vendor buy from the farmer? **(5 Marks)**

END