UGANDA NATIONAL EXAMINATIONS BOARD

PRIMARY LEAVING EXAMINATIONS
2022

MATHEMATICS

Time allowed : 2 hours 30 minutes

Random No.						Personal No.			

MUWANIKA BRIAN

Candidate's name: ……

Candidate's Signature: ……

School Random No. ……

District ID:

Read the following instructions carefully:

1. Do not write your **school** or **district name** anywhere on this paper.
2. This paper has two sections **A** and **B**. Section **A** has **20 questions** and **section B** has **12 questions**. This paper has **15 pages** printed altogether.
3. Answer **all** questions. All the working for both sections **A** and **B** must be shown in the spaces provided.
4. **All** working must be done using a **blue** or **black** ball point pen or ink. Any work done in pencil other than graphs and diagrams will **NOT** be marked.
5. **No calculators** are allowed in the examination room.
6. Unnecessary **changes** in your work and handwriting that cannot be easily read may lead to loss of marks.
7. Do not fill anything in the table indicated : **"For examiners' use only"** and the boxes inside the question paper.

FOR EXAMINERS' USE ONLY		
Qn. No.	**MARKS**	**EXR'S NO.**
1 - 5		
6 -10		
11 -15		
16 - 20		
21 - 22		
23 - 24		
25 - 26		
27 - 28		
29 - 30		
31 - 32		
TOTAL		

©2022 Uganda National Examinations Board

Turn Over

SECTION A: 40 MARKS

Answer **all** questions in this Section

Questions **1** to **20** carry two marks each

1. Work out: $\frac{3}{5} + \frac{1}{5}$

Topic: Fractions	**OR**	*And many more other different approaches*
$\frac{3}{5} + \frac{1}{5} = \frac{3+1}{5}$ $= \frac{4}{5}$		

2. Write 546 in Roman numerals.

Topic: Whole numbers	**OR**	*And many more other different approaches*
H T O 5 4 6 = 500 + 40 + 6 D XL VI DXLVI		

3. Work out:

$$\begin{array}{r} 1\,2\,7 \\ \times \quad 3 \\ \hline \\ \hline \end{array}$$

Topic: Operation on whole numbers	**OR**	*And many more other different approaches*
$\begin{array}{r} 1\,2\,7 \\ \times \quad 3 \\ \hline 3\,8\,1 \\ \hline \end{array}$ | 7 x 3 = 21 2 x 3 = 6 6+ 2 = 8 1 x 3 = 3	0	

	1	**2**	**7**	x
0	0 / 3	0 / 6	2 / 1	**3**
	3	8	1	

4. Given that PuQ = {1, 2, 3, 4, 5, 6, 7, 8}, PnQ = {1, 4, 7} and p' = {5, 6, 8}, list the elements of set P.

Topic: Set concepts	**OR**	*And many more other different approaches*
p' = {5, 6, 8} refers to the elements that are not part of set P. so we shall remove set p' from the Union set and then the remaining elements will be for set P PuQ = {1, 2, 3, 4 ⑤ ⑥ 7 ⑧ } Set P = {1, 2, 3, 4, 7 }		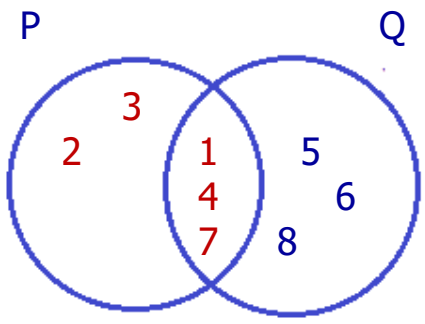 Set P = {1, 2, 3, 4, 7 }

5. Find the next number in the sequence:

1, 3, 7, 13, 21, ...

Topic: Patterns and sequences	**OR**	*And many more other different approaches*
1, 3, 7, 13, 21, ...31 +2 +4 +6 +8 +10 +2 +2 +2 +2 21 +10 31		

6. Using a ruler and a pair of compasses only, construct a line through point T parallel to line AB.

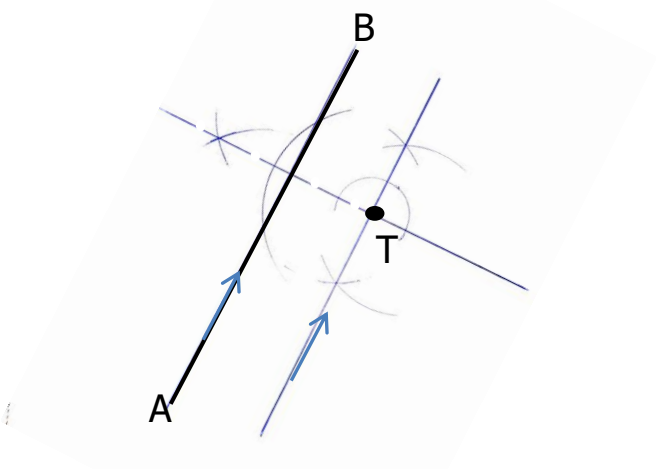

7. Write the number whose standard form is 7.43×10^2.

Topic: Whole numbers	OR	And many more other different approaches
$7.43 \times 10^2 = 7.43 \times 10 \times 10$ $= 7.43 \times 100$ $= \frac{743}{100} \times 100$ $= \frac{74300}{100}$ $= 743$		$7.43 \times 10^2 = 74.3 \times 10^1$ $74.3 \times 10^1 = 743 \times 10^0$ $743 \times 10^0 = 743 \times 1$ $743 \times 1 = 743$ $= 743$

8. Represent the number operation $^{-}5 + ^{+}7$ on the number line below.

Topic: Integers	And many more other different approaches

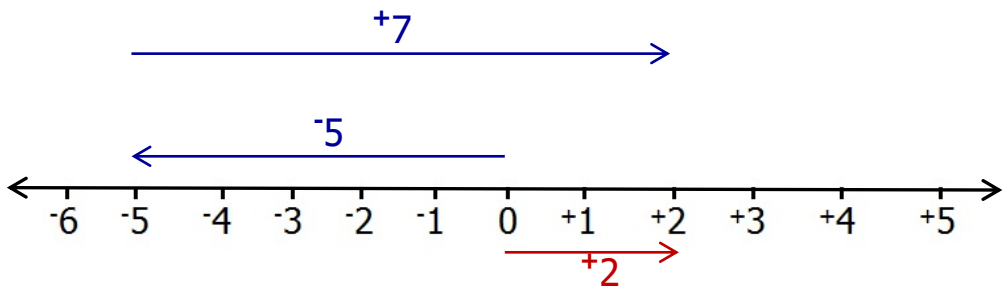

$^{-}5 + ^{+}7 = ^{+}2$

Turn Over

9. Solve: $2a - 6 = 10$

Topic: Algebra	OR	And many more other different approaches
$2a - 6 = 10$ $2a - 6+6 = 10 + 6$ $2a - 0 = 16$ $2a - 0 = 16$ $2a = 16$ $\frac{2a}{2} = \frac{16}{2}$ $a = 8$		$2a - 6 = 10$ $\frac{2a}{2} - \frac{6}{2} = \frac{10}{2}$ $a - 3 = 5$ $a - 3+3 = 5+3$ $a - 0 = 8$ $a = 8$

10. A packet of biscuits weighs 200 grammes. Calculate the total weight in kilogrammes of 30 packets of biscuit.

Topic: Length, mass and capacity	**OR**
1 packet weighs 200 grammes 30 packets weigh (200g x 30) 30 packets weigh 6000 grammes 1000g = 1kg 1g = $\frac{1}{1000}$ kg 6000g = $\frac{1}{1000}$ x 6000 kg 6000g = $\frac{6000}{1000}$kg 6000g = 6kg 6 kilogrammes	1 packet weighs 200 grammes 1000g = 1kg 1g = $\frac{1}{1000}$ kg 200g = $\frac{1}{1000}$ x 200 kg 200g = $\frac{200}{1000}$kg 200g = 0.2kg 1 packet weighs 0.2 kilogrammes 30 packets weigh (0.2kg x 30) = 0.2kg x 30 = $\frac{2}{10}$ x 30 kg = $\frac{60}{10}$ kg 6 kilogrammes

11. The drawings below show cards with numbers written on them.

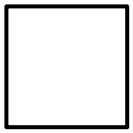

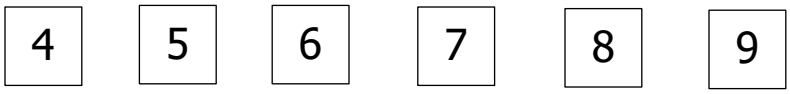

The cards were then put in a bag. Find the probability that a card picked at random from the bag has a composite number.

Topic: Data handling	**OR**	*And many more other different approaches*
Probability = $\frac{\text{Number of events}}{\text{Number of sample space}}$		Probability = $\frac{4}{6}$
Events = (4, 6, 8, 9) n(E) = 4 Sample space =(4,5,6,7,8,9) n(s.s) = 6		

12. Work out:

$$\begin{array}{rr} & 1\ 0\ 0\ 1_{two} \\ - & 1\ 1\ 1_{two} \\ \hline & \\ \hline \end{array}$$

Topic: whole numbers	**OR**	*And many more other different approaches*

Work out:

$$\begin{array}{rr} & {\scriptstyle 1} \\ & 0\ 2\ 2 \\ & 1\ 0\ 0\ 1_{two} \\ - & 1\ 1\ 1_{two} \\ \hline & 0\ 0\ 1\ 0_{two} \\ \hline \end{array}$$

1-1 = 0
2-1 = 1
1-1 = 0

13. A poultry farmer sells 30 eggs at sh 12,000. Find the cost of 25 eggs.

Topic: Money	**OR**	*And many more other different approaches*

30 eggs cost sh 12,000
1 egg costs (sh 12,000 ÷ 30)
1 egg costs sh 400
25 eggs cost (sh 400 x 25)
25 eggs cost sh 10,000

$$\frac{\text{required}}{\text{provided}} \times \text{cost}$$

$$= \frac{25}{30} \times \text{sh } 12{,}000$$

$$= 25 \times \text{sh } 400$$

$$= \text{Sh } 10{,}000$$

14. Round off 2498 to the nearest hundreds.

Topic: whole numbers	**OR**	*And many more other different approaches*

	R	D	
TH	H	T	O
2	**4**	**9**	**8**

$$\begin{array}{rr} & 2400 \\ + & 100 \\ \hline & 2500 \\ \hline \end{array}$$

15. The weight of a teacher is 72 kg. The average weight of the teacher and three pupils is 50 kg. Calculate the total weight of the pupils.

Topic: Length, Mass and C | **OR** | *And many more other different approaches*

Number	Average	Total
Teacher		72 kg
4	50kg	200 kg

Total weight of all including the teacher = Average weight x number
= 50 kg x 4
= 200 kg

Total weight of the pupils = 200 kg – 72 kg
= 128 kg

16. Town M is South East of town V. Find the bearing of town V from town M.

Topic: Lines, Angles and G | **OR** | *And many more other different approaches*

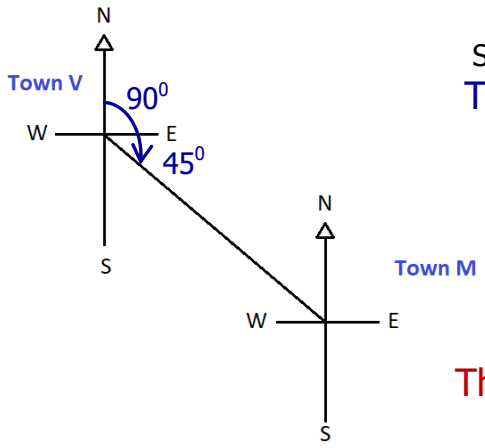

South East is equivalent to 135^0 in true bearing

The bearing of town M from town V is 135^0

Opposite bearing is $135^0 + 180^0 = 315^0$

The bearing of town V from town M is 315^0

17. A businesswoman borrowed sh 100,000 from a savings group which charged her an interest rate of 3% per month. Calculate the interest she paid after a period of six months.

Topic: Fractions	**OR**	*And many more other different approaches*

Interest = Principal x rate x time

$= \text{sh } 100{,}000 \times \frac{3}{100} \times 6$

$= \frac{\text{sh } 1800{,}000}{100}$

= sh 18,000

18. Peter walked a distance of 2 km in 20 minutes. Find his speed in kilometers per hour.

Topic: Time	**OR**	*And many more other different approaches*

time = 20 minutes

60 minutes = 1 hour

1 minute = $\frac{1}{60}$ hours

20 minutes = $(\frac{1}{60} \times 20)$ hours

$= \frac{20}{60}$ hours

$= \frac{1}{3}$ hours =

speed = Distance ÷ time

= 2 km ÷ $\frac{1}{3}$ hours

= $\frac{2 \text{ km}}{1} \times \frac{3}{1}$ hours

= $\frac{6 \text{ km}}{1 \text{ h}}$

= 6 km/h

19. Given that $m = 8$ and $n = 6$, find the value of $\sqrt{mn+1}$.

Topic: Algebra	**OR**	*And many more other different approaches*
$= \sqrt{mn+1}$ $= \sqrt{m \times n+1}$ $= \sqrt{8 \times 6+1}$		$= \sqrt{48+1}$ $= \sqrt{49}$ $= 7$

20. Calculate the volume of the cylinder below. (Use $\pi = \frac{22}{7}$)

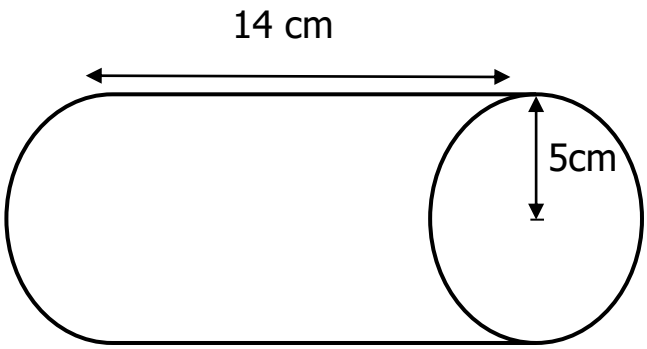

Topic: Fractions	**OR**	*And many more other different approaches*

Volume of a cylinder $= \pi r^2 \times h$

$= \frac{22}{7} \times 5\text{ cm} \times 5\text{ cm} \times 14\text{ cm}$

$= \frac{22 \times 5\text{cm} \times 5\text{ cm} \times 2\text{ cm}}{1}$

$= 110\text{cm} \times 10\text{ cm}^2$

$= 1100\text{ cm}^3$

SECTION B: 60 MARKS

*Answer **all** the questions in this Section.*

Marks for each question are indicated in brackets.

21. In a village, 3 farmers grow both rice (R) and sunflower (S). 24 farmers grow rice and y farmers grow sunflower only. $2y + 9$ farmers grow none of the two crops.

(a) Use the given information to complete the Venn diagram below. *(02 marks)*

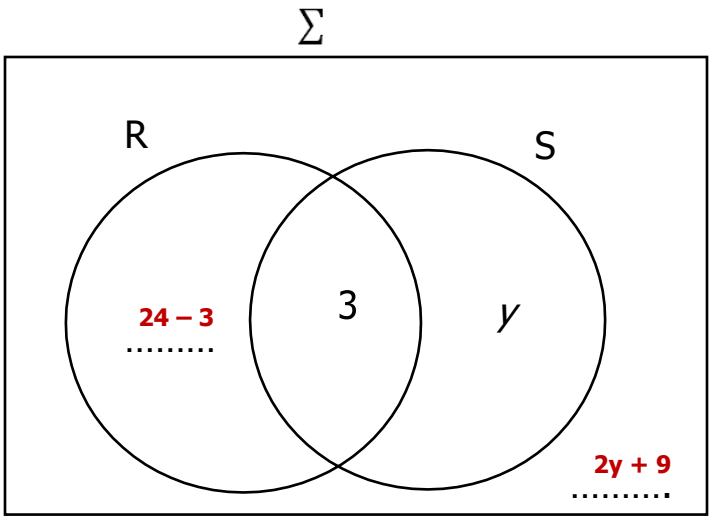

(b) Given that the number of farmers who grow rice only is equal to the number of farmers who grow none of the two crops, find the value of y. *(02 marks)*

Topic: Set concepts	**OR**	*And many more other different approaches*

$2y + 9 = 24 - 3$

$2y + 9 = 21$

$2y + 9 - 9 = 21 - 9$

$2y + 0 = 12$

$2y = 13$

$\frac{2y}{2} = \frac{12}{2}$

$y = 6$

(c) How many farmers grow sunflower? *(01 mark)*

Topic: Set concepts	**OR**	*And many more other different approaches*

Number of farmers growing sunflower = 3 + y
= 3 + 6
= 9

22. A trader bought 500 mangoes a sh 250 each. The trader then sold 100 of the mangoes at sh 350 each and the rest at sh 300 each. Calculate the profit the trader made. *(05 marks)*

Topic: Time	**OR**	*And many more other different approaches*

Buying price
1 mango at sh 250
500 mangoes at sh 250 x 500
= sh 125,000

Selling price phase one
1 mango at sh 350
100 mangoes at sh 350 x 100
= sh 35,000

remaining mangoes
(500- 100) = 400

Selling price phase one
1 mango at sh 300
400 mangoes at sh 400 x 300
= sh 120,000

Total selling price = sh 120,000 + sh 35, 000
= sh 155,000

Profit = Selling price – Buying price

sh 155,000
- sh 125,000
= sh 030,000

Turn Over

23. Work out: $\dfrac{0.75 + 0.25}{0.65 - 0.4}$ *(04 marks)*

Topic: Time	**OR**	*And many more other different approaches*

$$\frac{0.75 + 0.25}{0.65 - 0.4} = \frac{1}{0.25}$$

$$0.75 + 0.25 = \mathbf{1.00}$$

$$1 \div 0.25 = 1 \div \frac{25}{100}$$

$$0.65 - 0.40 = 0.25$$

$$= \frac{1 \times 100}{1 \times 25}$$

$$= \frac{100}{25}$$

$$= 4$$

24. A motorist left his home at 7:40 a.m. and travelled to town for 3 hours at an average speed of 64 km/h. He stayed in town for 30 minutes and then travelled back home.

(a) Calculate the distance from the motorist's home to the town.

(02 marks)

Topic: Time	**OR**	*And many more other different approaches*

Distance = Speed x Time
= 64km/h x 3 hours
= 192km

(b) At what time did the motorist leave the town? *(01 mark)*

Topic: Time | **OR** | *And many more other different approaches*

Arrival time = Start time + duration

	Hours	Minutes	
	7	40	
+	3	00	
	10	40	a.m.

Departure time = Start time + duration

	Hours	Minutes	
	10	30	
+		30	
	11	10	a.m.

He left the town at 11:10 a.m.

(c) Calculate the speed at which the motorist travelled back if he reached home at 3:10 p.m. *(03 marks)*

Topic: Time | **OR** | *And many more other different approaches*

Duration = End time – Start time

= 3 : 10 p.m. - 11: 10 a.m. (to 24 hours)

	Hours	Minutes	
	3	10	
+	12	00	
	15	10	hours

	Hours	Minutes	
	11	10	
+	0	00	
	11	10	hours

	Hours	Minutes	
	15	10	
+	11	00	
	04	00	hours

Time = 4 hours

Distance = 192 km

Speed = Distance ÷ Time

= 192 km ÷ 4 hours

= 48 km ÷ 1 hour

= 48 km/h

25. The sum of the three consecutive counting numbers is 78. Find the largest number. *`(04 marks)*

Topic: Set concepts	**OR**	*And many more other different approaches*

Let the largest number be g

large	larger	largest	Total
$(g-2)$	$(g-1)$	g	78

$$
\begin{aligned}
g + g - 2 + g - 1 &= 78 \\
g + g + g - 2 - 1 &= 78 \\
3g - 3 &= 78 \\
3g - 3 + 3 &= 78 + 3 \\
3g - 0 &= 81 \\
\frac{3g}{3} &= \frac{81}{3} \\
g &= 27
\end{aligned}
$$

26. (a) Using a ruler and a pair of compasses only, construct triangle ABC in which line AB= 7 cm, AC = 6 cm angle CAB = 45^0 . *(04 marks)*

Sketch

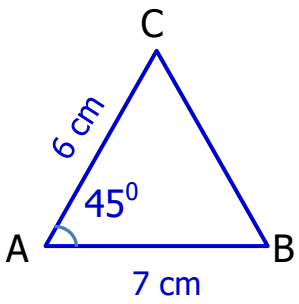

Accurate

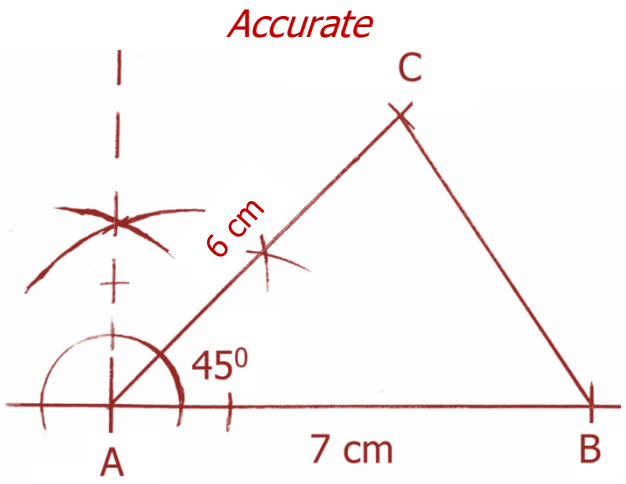

(b) Measure angle ACB. = 77^0 ,78^0 or 79^0 *(01 mark)*

Turn Over

27. The figure below represents a photograph enclosed in a photo frame. The length of the photo frame is 30 cm and width 22 cm. The area covered by the photograph is shaded. Study the figure and use it to answer the questions that follow.

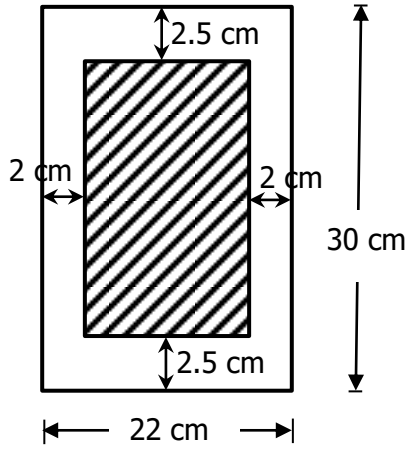

(a) Find the length of the photograph. *(02 marks)*

Topic: Length mass and C	**OR**	*And many more other different approaches*
Length = 30 cm – (2.5 cm + 2.5 cm) = 30 cm – (5.0 cm)		= 30 cm – 5.0 cm = 30 cm – 5 cm = 25 cm

(b) Calculate the area of the frame not covered by the photograph.
(04 marks)

Topic: Length mass and C	**OR**	*And many more other different approaches*
Length of the photo = 25 cm Width of the photo = 22 cm – (2 cm + 2 cm) = 22 cm – 4 cm = 18 cm Area of the photo = L x W = 25 cm x 18 cm = 450 cm^2		Area of the frame = L x W = 30 cm x 22 cm = 660 cm^2 Area of the frame not covered = 660 cm^2 - 450 cm^2 = 210 cm^2

28. A mathematical set costs sh 2000 more than an exercise book. The cost of two exercise books is the same as $\frac{2}{5}$ of the cost of a mathematical set. Find the cost of an exercise book. *(04 marks)*

Topic: Set concepts | **OR** | *And many more other different approaches*

Let the cost of the exercise book be h

	Exercise book	Mathematical set
	h	(h + 2000)
2 Exercise books	2h	$\frac{2}{5}$ of (h + 2000)

$2h = \frac{2}{5}$ of (h + 2000)

$2h = \frac{2}{5} \times (h + 2000)$

$2h \times 5 = \frac{2}{5} \times (h + 2000) \times 5$

$10h = 2(h + 2000)$

$10h = 2h + 4000$

$10h = 2h + 4000$

$10h - 2h = 2h - 2h + 4000$

$8h = 0 + 4000$

$\frac{8h}{8} = \frac{4000}{8}$

h = sh 500

29. In the figure below, line XY = XZ and line TS is parallel to line XY. Angle TSZ = 45^0 and angle YXZ = 70^0 . Study the figure and use it to answer the questions that follow.

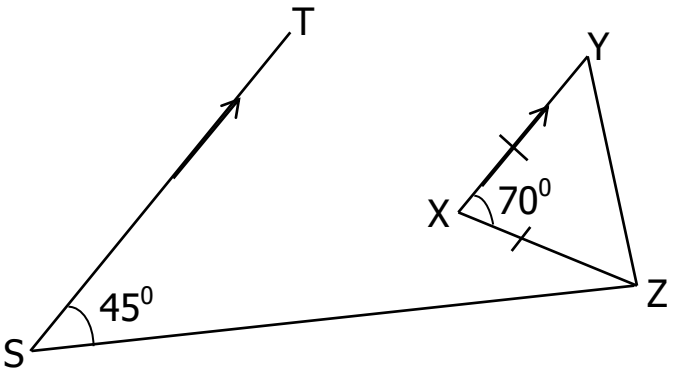

Find the size of angle;

Topic: Lines, angles and G	**OR**	*And many more other different approaches*

(a) XYZ

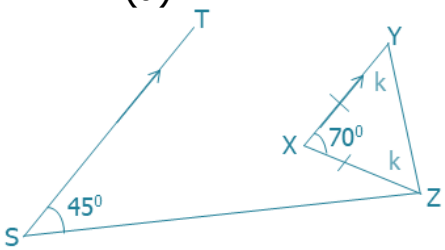

Let angle XYZ be k *(02 marks)*
Triangle XYZ is an isosceles triangle
Two base angles of an isosceles triangle are equal
Interior angles of a triangle add up to 180^0

$k + k + 70^0 = 180^0$
$2k + 70^0 = 180^0$
$2k + 70^0 - 70^0 = 180^0 - 70^0$
$2k + 0 = 110^0$
$\frac{2k}{2} = \frac{110^0}{2}$
$k = 55^0$

Topic: Lines, angles and G	**OR**	*And many more other different approaches*

(b) SZX *(03 marks)*

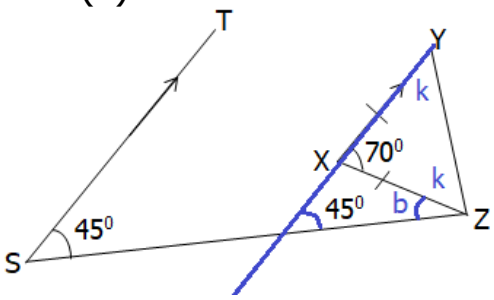

Let angle SZX be b
Two interior angles of a triangle
Add up to one opposite exterior

$b + 45^0 = 70^0$
$b + 45^0 - 45^0 = 70^0 - 45^0$
$b + 0 = 25^0$
$b = 25^0$

30. The bar graph below shows marks scored by pupils in a test. Study the graph and use it to answer the questions that follow.

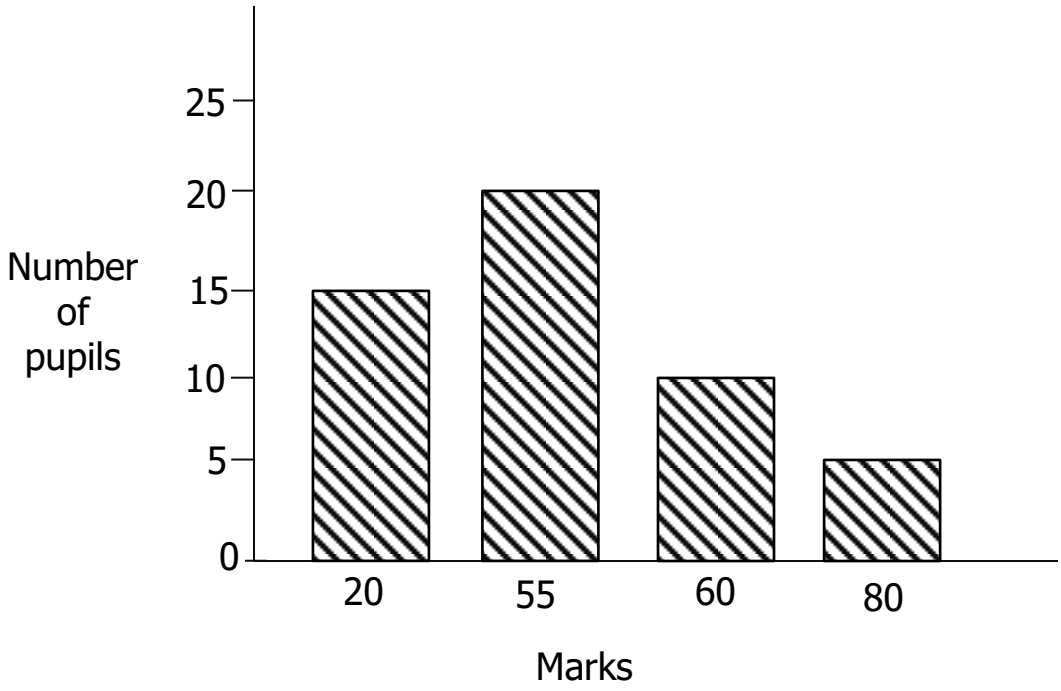

(a) Find the number of pupils who did the test. *(02 marks)*

Topic: Data handling | **OR** | *And many more other different approaches*

Marks	20	55	60	80
Number of pupils	15	20	10	5

= (15 + 20 + 10 + 5) pupils

= 50 pupils

(b) Calculate the mean mark of the pupils. *(03 marks)*

Topic: Data handling | **OR** | *And many more other different approaches*

$$\text{Mean mark} = \frac{\text{Sum of marks}}{\text{Total number of pupils}}$$

$$= \frac{(20 \times 15) + (55 \times 20) + (60 \times 10) + (80 \times 5)}{50}$$

$$= \frac{300 + 1100 + 600 + 400}{50}$$

$$= \frac{2400}{50}$$

$$= 48$$

31. A company supplied text books to three schools; F, G and H in the ratio 4:6:5 respectively. School F received 72 books less than school G.

(a) Find the number of text books supplied by the company.

(03 marks)

Topic: Fractions | **OR** | *And many more other different approaches*

School	F	G	H	Total
	4 parts	6 parts	5 parts	15 parts

Difference between G and F = 6 parts – 4 parts

= 2 parts

Total parts are 15

2 parts represent 72 books

1 part represents 72 books ÷2

1 part represents 36 books

1 part represents 36 books

15 part represent 36 books x 15

15 part represent 540 books

540 text books were supplied by the company

(b) Calculate the number of books school H got ? *(02 marks)*

Topic: Fractions | **OR** | *And many more other different approaches*

School H got 5 parts

1 part represents 36 books

5 parts represents 36 books x 5

5 part represents 180 books

School H got 180 books

32. The diagram below shows a tank full of water. The water leaks at a rate of 1.5 litres per hour. Study the diagram and use it to answer the questions that follow.

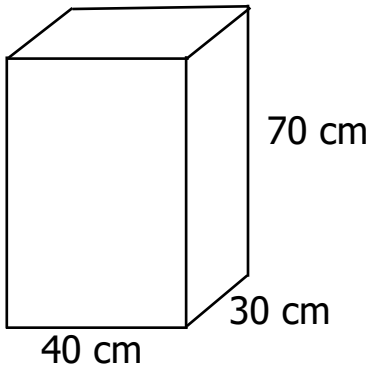

(a) Find the capacity of the tank in litres. *(02 marks)*

Topic: Length, mass an c	**OR**	*And many more other different approaches*
Volume of a cuboid = L x w x h = 40 cm x 30 cm x 70 cm = 84000 cm^3		1000 cm^3 = 1 litre 1 cm^3 = $\frac{1}{1000}$ litre 84000 cm^3 = $\frac{1}{1000}$ x 84000 litres 84000 cm^3 = $\frac{84000}{1000}$ litres = 84 litres

(b) Calculate;

(i) the amount of water in litres that will leak out of the tank in 12 hours. *(01 mark)*

Topic: Length, mass an c	**OR**	*And many more other different approaches*
In 1 hour, 1.5 litres leaks. In 12 hours, 1.5 x 12 litres = $\frac{15}{10}$ x 12 litres		= $\frac{180}{10}$ litres = 18 litres

(ii) the height of water that remains in the tank after 12 hours.

(03 marks)

Topic: Length, mass an c	**OR**	*And many more other different approaches*

Full capacity = 84 litres

Number of litres lost in 12 hours is 18 litres

New capacity = (84 - 18) litres

= 66 litres

1 litre = 1000 cm^3

66 litres = 66 x 1000 cm^3

66 litres = 66000 cm^3

Volume = L x w x h

66000 cm^3 = 40 cm x 30 cm x h

66000 cm^3 = 1200 cm^2 x h

$$\frac{66000\ cm^3}{1200\ cm^2} = \frac{1200\ cm^2 \times h}{1200\ cm^2}$$

$$\frac{55\ cm}{1} = \frac{1 \times h}{1}$$

55 cm = h

h = 55 cm

END

Note:
All the questions have different ways of attempting them.
Just a few were used.
Each question has different ways of approaching it.

Weekly topical questions are to be released

Contact, or whatsapp

0703416570
0703145314
0776705256
0786034732

Kindly forward to others, lets help learners practice Mathematics