SECTION A (40 MARKS)

1. Add:

$$\begin{array}{r} 58 \\ -\ 23 \\ \hline \\ \hline \end{array}$$

2. Solve : $3k + 2 = 20$

3. Shade A complement on the Venn diagram below.

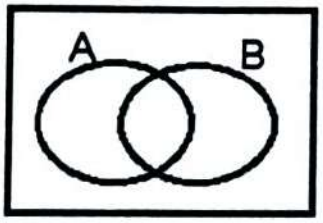

4. Find the next number in the sequence below.
   81, 27, 9, 3, 1, _____

5. The area of a triangle is $27dm^2$, Find its base if the height is 9dm.

11. 7 apples cost sh.3500. Find the cost of half a dozen of apples.

12. A certain meeting started at 10:25p.m. and ended at 1:55a.m. How many hours did it take?

13. Change 38_{ten} to base five.

14. Using a ruler, a pencil and a pair of compasses only, construct an angle of 150^0

15. How many elements are in a set with one subset ?

6. Simplify: $^{-}7 + {}^{-}5$

7. Simplify: $\frac{1}{2} - \frac{2}{3} \times \frac{1}{4}$

8. Find the range of 4, $^{-}3$, 0, 1 and $^{-}2$.

9. Change 2500 gm. to Kg

10. Round off **21.95** to the nearest tenths.

SECTION B (60 MARKS)

21. The Venn diagram below shows the number of pupils who like English (E) and Science (S). Use it to answer the questions that follow:

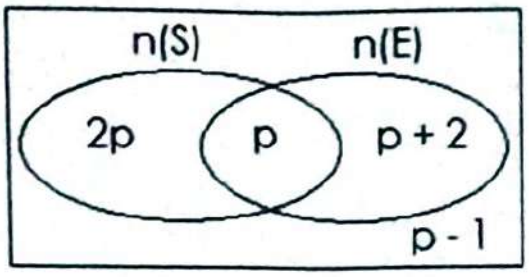

a) Given that 21 pupils do not like science, find the value of p. (03 marks)

b) Find the total number of pupils in the class. (02 marks)

22. A, B and C shared some money in the ratio of 2:5:8 respectively. If C got sh.90,000 more than B, how much money did they share altogether? (05marks)

16. The LCM of m and n is 36. Their GCF is 3. If m = 9, find the value of n

17. Write **one hundred twenty thousand thirteen** in figures.

18. Find the value of **y** in the diagram below;

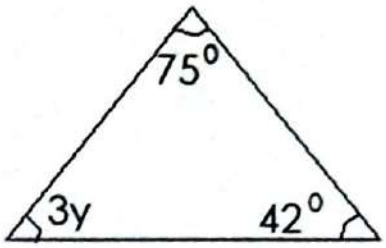

19. Work out (29÷3) + (16÷3) using distributive property.

20. Solve: $2^p \times 3^3 = 108$

25. a) Given that $\frac{1}{4}$ of a number is 12. Find the number. (02marks)

b) Simplify $\frac{2}{3} x \frac{3}{4} \div \frac{1}{2}$ (02marks)

26. A pupil scored the following marks.

Marks	90	60	h	40
Number of pupils	2	3	4	1

(a) How many pupils did the test (02marks)

(b) Find the value of h if the average mark is 60 (03marks)

23. a) Using a ruler, a pencil and a pair of compasses only, construct a triangle TRK where RK= 7cm, angle TRK $=45^0$ and angle TKR $=60^0$. (04marks)

b) Measure line KT. (01mark)

24. Sasha went to the supermarket and bought the following items:

$1\frac{1}{2}$ Kg of meat at sh.13000 each kg

3 litres of milk at sh. 3200 per litre.

500gm of sugar at sh.5000 per kg.

a) Calculate her total expenditure. (04marks)

b) If she went with a fifty thousand shilling note, find her change. (01mark)

29.a) $2(x - 3) = 14$ (02 marks)

b) Solomon is 14 years older than Vuva. In 10 years' time, the ratio of Vuva's age to Solomon's age will be 3:4. How old will Vuva be then? (03marks)

30. A worker was given a task of carrying 76 books from the store to the library. Every trip, he carried 4less books than the previous trip. If he made four trips, how many books did he carry in the first two trips? (05 marks)

27.a) What is 6 in base five? (02 marks)

c) Find the value of K in $103_k = 54_{seven}$ (03marks)

28.a) Find the supplement of 125^0. (02 marks)

b) The interior angle of a regular polygon is 90^0 more than its exterior angle. Find the size of the interior angle. (03marks)

31. Below is rectangle KLMN. Use it to answer the questions that follow.

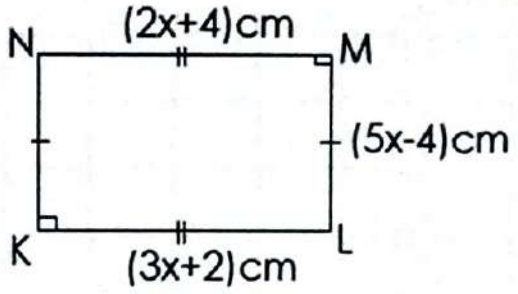

a) Find the value of x. (02 marks)

b) Find the length of diagonal AC. (04 marks)

32.a) Plot P(⁻1,3), Q(⁻4,⁻2) and R(2,⁻2) on the grid graph below; (03 marks)

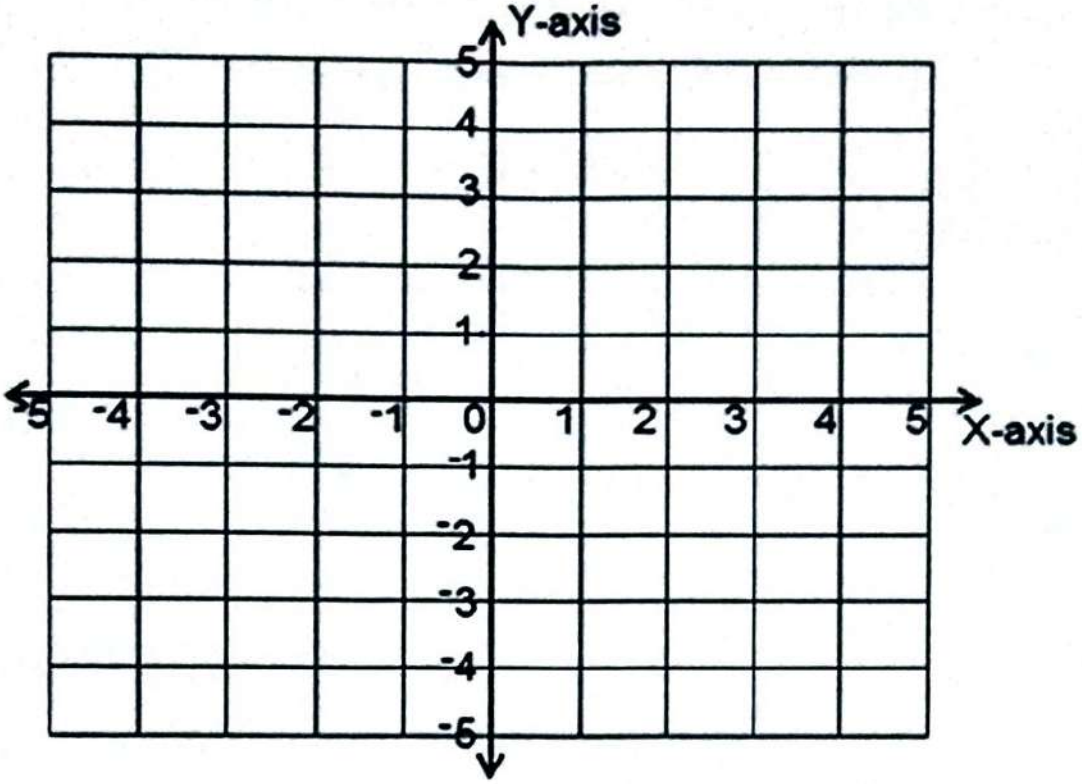

b) Join P to Q, Q to R, R to P and find the area of the figure formed.
(02 marks)

END

SECTION A: 50 MARKS

(Questions 1 to 50 carry one mark each)

Sub-section I

*In each of the questions **1** to **5**, fill in the blank space with a suitable word.*

1. How.....sugar is needed in the human body?
2. Our goat has given birth to four.....
3. A hen is bigger than .....owl.
4. I don`t know .....she always comes late to school.
5. It has been raining .....morning.

*In each of the questions **6** to **15**, use the correct form of the word given in the brackets to complete the sentences.*

6. Their team played better than ..... (us)
7. If I had .....enough money, I would have bought a new bag. (get)
8. The weather will be ..... in the afternoon. (rain)
9. Okoth could not tell the..... between the two cows. (differ)
10. My hands were.....than his after I had picked the rubbish. (dirty)
11. The headmaster gave a clear .....at the parade.(explain)
12. The independence monument was .....designed. (skill)
13. We bought .....food from the restaurant. (taste)
14. I was an .....during the previous debate (oppose)
15. The hospital has.....a modern cancer machine. (buy)

*In each of the questions **26** to **28**, re-write the sentence giving the opposite form of the underlined word.*

26. All the <u>smart</u> boys were left outside the headmaster's office.

.....

.....

27. Our teacher gave us more <u>answers</u> than we had expected.

.....

.....

28. Junior failed because he was very <u>hard working</u>.

.....

.....

*In each of the questions **29** to **30**, give a single word with the same meaning as the underlined group of words.*

29. My mother encouraged me to <u>go on</u> reading until I learnt to pronounce words.

.....

.....

30. Children should <u>keep away from</u> strangers.

.....

.....

Sub-Section II

*In each of the questions **31** to **51**, rewrite the sentences as instructed in the brackets.*

31. I couldn`t go to school because I had hurt my foot.

(Re-write the sentence beginning: Because.....)

.....

.....

*In questions **16** and **17**, use each of the given words to form a sentence to show that you know the difference in their meanings.*

16. there.....

.....

17. their.....

.....

*In each of the questions **18** to **20**, give the plural form of the given words.*

18. tomato.....

19. fly.....

20. loaf.....

*In each of the questions **21** and **22**, arrange the given words in alphabetical order.*

21. absent, ability, abscond, abject

.....

.....

22. cap, car, cat, can

.....

.....

*In each of the questions **23** to **25**, write the abbreviations in full.*

23. They'll.....

24. i.e. .....

25. c/o.....

39. We always eat fried chicken.

(Re-write the sentence beginning: Fried chicken.....)

.....

.....

40. Both Musa and John attended class.

(Re-write beginning: .....as well as.....)

.....

.....

41. Thieves broke into our house immediately power went off.

(Re-write as one sentence beginning: As soon as.....)

.....

.....

42. We didn't sleep at midnight, did we?

(Re-write the sentence ending.....didn't we?)

.....

.....

43. The candidates went to Kiwatule at 10:00 a.m. It started raining at 11:00 a.m.

(Re-write the sentence beginning: By the time.....)

.....

.....

44. There is a red pen in the tin. The red pen belongs to our teacher.

(Rewrite as one sentence using: .....which.....)

.....

.....

32. "Which road can I take?" Tom asked.

(Re-write the sentence beginning: Tom wanted.....)

.....

.....

33. We slept in a room. The room had internet. (Join using: .....which.....)

.....

.....

34. Kamunvi arrived at home before six o'clock every day.

(Re-write the sentence using: .....reached.....)

.....

.....

35. Sarah is not so short. Sandra is short.

(Re-write as one sentence using: .....shorter.....)

.....

.....

36. Unless you run fast, you will be late for the first lesson.

(Re-write the sentence beginning: If.....)

.....

.....

37. The teacher managed to teach the lesson in bad weather.

(Re-write the sentence using: .....succeeded.....)

.....

.....

38. Rwenzori is a very high mountain. (Re-write beginning: What.....!)

.....

.....

SECTION B: 50 MARKS

(Questions **51** to **55** carry 10 marks each)

51. **Read the passage below and answer in full sentences the questions that follow.**

There are more species of insects than all animals added altogether. The study of insects is called entomology. It is extremely important that we learn about insects since some of them do some damage to man, his animals, crops, stores of food and materials.

Despite the terrible damage and diseases caused by some insects, there are benefits that man generally gets from insects. Insects pollinate crops. This is their most important role to man.

Some insects also produce commercially important products: bees produce honey and wax: the silk worms produce the fine silk threads that are used in the manufacture of expensive fabrics.

Insects are grouped under arthropods. They have common characteristics such as exoskeleton, jointed legs and segmented bodies. Their bodies are divided into three distinct parts, that is, head, thorax and the abdomen. The head, the first part of the body, comprises the feelers and the compound eyes.

The second part of the body is the thorax and this consists of three segments which bear three pairs of legs. The insect with its three pairs of legs can easily be differentiated from spiders which have four pairs.

The abdomen is the third part of the body. The segments of the abdomen have no legs but contain various organs of the reproductive system. In some insects there is a structure at the back-end of the abdomen which has various functions; for example, egg-laying as seen at the back end of bush crickets, or for causing a painful sting, as seen at the back-end of wasps.

Questions:

a) What is the study of insects called?

.....

.....

45. The bank will lend our school a lot of money.

(Re-write beginning; .....borrow.....)

.....

.....

46. Suzan's neighbour has come to our garden.

(Re-write the sentence beginning: A neighbour.....)

.....

.....

47. Our school bus is small. It can't take us all at once.

(Re-write as one sentence using: .....enough.....)

.....

.....

48. It was raining heavily. The football match took place.

(Re-write as one sentence beginning: Much as.....)

.....

.....

49. Our father works as a clerk in that office.

(Re-write the sentence beginning: That is.....)

.....

.....

50. It is a long way from Kampala to Kisoro.

(Re-write using: .....far.....)

.....

.....

b) How are insects harmful to man?

.....

.....

c) What is the most important role of insects?

.....

.....

d) Which insect has a painful sting?

.....

.....

e) Which part of an insect contains various organs of the reproductive system?

.....

.....

f) Which type of skeleton do arthropods possess?

.....

.....

g) Why are bees commercially important to man?

.....

.....

h) What is the difference between an insect and a spider?

.....

.....

i) Give another word or group of words with same meaning as:

I. comprises .....

II. various.....

52. **The talk below is about an accident Anita witnessed. Study it and answer, in full sentences, the questions that follow.**

Carol: Good morning, Anita.
Anita: Good morning, Carol.
Carol: Why are you late today?
Anita: My friend, it is a long story.
Carol: A long story, what is it about? Did you fall sick?
Anita: No, I did not fall sick but there was an accident on Bukasa Road.
Carol: An accident! Were you involved? What exactly happened?
Anita: The taxi we were following knocked down a school boy, so we had to stop for some time.
Carol: A school boy, sorry! To which school was he going?
Anita: I did not find out the school but I think he was in primary.
Carol: Did he die?
Anita: No, he did not, but sustained serious injuries especially on the head.
Carol: That is sad news. How did you assist him?
Anita: My mother called the police and they sent an ambulance to take him to Mulago Hospital.
Carol: Anita, thank you for being very kind people.
Anita: You are welcome, Carol.

a) What is the dialogue about?

.....

.....

b) Who was late for school?

.....

.....

53. **Read the poem below carefully and answer in full sentences the questions that follow.**

What a rainy season it was
The season of heavy rains
That destroyed almost everything.
Without sparing people's lives.

What a rainy season it was
The season of heavy rains
That hit the ground severely.
And hurt the people's crops.

What a rainy season it was
The season of heavy rains
That demolished people's houses.
As well as livestock , trees and other property.

What a rainy season it was
The season of heavy rains
That caused floods and landslides.
Which left us homeless.

Nantale Geraldine

a) Which season is talked about in the poem?

.....

.....

b) What didn't the heavy rains spare?

.....

.....

c) At what time did the dialogue take place?

.....

.....

d) Which person was injured in the accident according to the dialogue?

.....

.....

e) Who called the ambulance at the scene of the accident?

.....

.....

f) Where was Anita going before she witnessed the accident?

.....

.....

g) To which hospital was the school boy taken?

.....

.....

h) Did the victim of the accident die?

.....

.....

i) Which part of the casualty was most injured?

.....

.....

j) Suggest a suitable title for the dialogue.

.....

.....

54. The sentences below are in a wrong order. Re-arrange them to form a correct story about the P.7 educational tour.

a) The pupils started preparing for the tour as soon as the lesson ended.
b) On their way, they saw many important places.
c) They visited Mr. Opero's farm at Serere.
d) Immediately the school bus arrived at the school park yard
e) Mr. Opero and some workers conducted the pupils around the farm.
f) Last week, P.7 pupils went for an educational tour.
g) This followed their science lesson on domestic animals by Ms. Naki.
h) At the farm they were welcomed by Mr. Opero himself.
i) They boarded and set off.
j) The following morning on Friday, they got ready.

.....

.....

.....

.....

.....

.....

.....

.....

.....

.....

.....

.....

.....

.....

c) How did the heavy rains hit the ground?

.....

.....

d) What did the heavy rains do to people's crops?

.....

.....

e) What happened to the livestock and trees?

.....

.....

f) Apart from floods, what did the heavy rains cause?

.....

.....

g) How was the writer of the poem affected by the heavy rains?

.....

.....

h) Who is the writer of the poem?

.....

.....

i) Give one word or group of words with the same meaning as the underlined words in the poem.

a) demolished.....

b) homeless.....

55. **The passage below is incomplete. Read through and fill the gaps with suitable words from the list given in the box below.**

dressed	home	visitor	sent	fighting
pretended	come	smiled	made	lawyer

Last year, during the second term holiday, my mother .....me to the market. She wanted me to buy a pumpkin. I asked Bruno, my half-brother, to .....along with me. A short distance away from home, we met an old man. He was carrying a bag.....out of dry palm leaves. He looked a very poor old man from a village.

He.....and greeted us. Bruno answered but I kept quiet. I did not like the way he was..... The man then asked us to direct him to the house of Mr. Mutebi, a..... I never wanted Bruno to direct him to our home but he did. This hurt me so much that I felt like.....Bruno. He told me that it was bad manners to treat strangers like that.

Immediately we got back ....., my mother welcomed us. She was very happy to have a visitor. The.....was the old man we had met on the way. She asked us to greet him. Bruno went immediately and shook his hand. I .....that I was taking the pumpkin to the kitchen.

END

9. Find the volume of the cuboid shown below

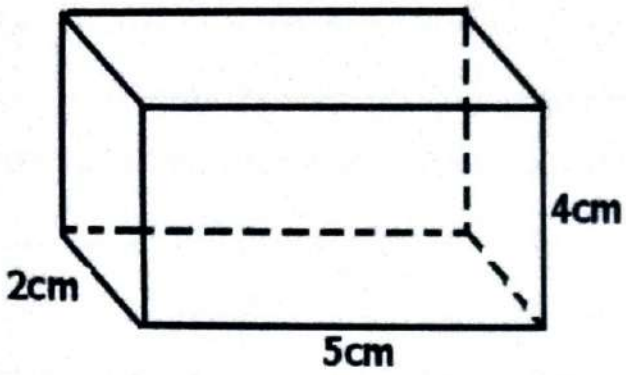

.....

.....

10. State one reason why colostrum is important to a calf.

.....

.....

11. What food value do we get from legumes?

.....

.....

12. Name the worm one can get as a result of walking barefooted in muddy places.

.....

.....

13. What do we call a written document that is handed to the patient describing how drugs are to be used?

.....

.....

14. Identify the main cause of home accidents.

.....

.....

SECTION A

1. Suggest one way of controlling malaria in a home without using drugs.

   .....

   .....

2. Name the dangerous chemical found in tobacco.

   .....

   .....

3. Suggest any one importance of feathers to birds.

   .....

   .....

4. Give one way of improving local breeds of cattle.

   .....

   .....

5. Identify one activity that promotes personal hygiene.

   .....

   .....

6. Name the nerve that transmits messages from the ear to the brain for interpretation.

   .....

   .....

7. Through which state of matter does heat travel fastest?

   .....

   .....

8. Identify one type of soil erosion commonly found in hilly areas.

   .....

   .....

23. What is the importance of blubber to a sea animal?

.....

.....

24. Give one example of a flightless bird.

.....

.....

25. What is the importance of oxygen in our bodies?

.....

.....

26. Why do bees often visit flowers?

.....

.....

27. State one way of controlling echoes in a cinema hall.

.....

.....

28. The diagram below is of a simple electric circuit. Use an arrow to show the direction of the flow of current.

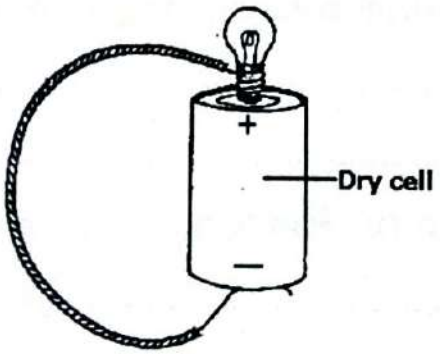

29. What first aid would you give to a child with a high temperature?

.....

.....

15. How does the washing of utensils help in improving people's health?

.....

.....

16. Where in the digestive system of chicken are the grits found?

.....

.....

17. Which part of a cow is affected by mastitis?

.....

.....

18. When oil is mixed with water in a container, it settles on top of the water. Why does this happen?

.....

.....

19. Name the structure that joins bones together at a joint.

.....

.....

20. What do you understand by the term "**farrowing**" in livestock farming?

.....

.....

21. How is a tadpole similar to a fish in terms of respiration?

.....

.....

22. Identify one insect that undergoes an incomplete metamorphosis.

.....

.....

38. Why is a stone considered to be matter?

.....

.....

39. State any one example of an insulator.

.....

40. What type of family has the following people; father, mother, son, daughter and house keeper?

.....

.....

SECTION B

41 (a) Mention two vaccines given at birth.

(i).....

(ii).....

(b) Name the last vaccine given to a child to complete the immunization schedule.

.....

.....

(c) Identify the site where the measles vaccine is administered.

.....

.....

42(a) What are vertebrates?

.....

.....

(b) Mention any two examples of reptiles.

(i).....

(ii).....

30. Kyebando community has been noted as a village with poor sanitation. Which disease is most likely to break out in such a community?

.....

.....

31. Name the fingerlike structure that prevents food from entering the Trachea during swallowing.

.....

32. Why are hedgehogs, bats and Aardvarks referred to as nocturnal mammals?

.....

.....

33. What are energy resources?

.....

.....

34. State one common characteristic found in both amphibians and fish.

.....

.....

35. Why is a maize grain regarded as a fruit?

.....

.....

36. State the main function of root hairs to a plant.

.....

.....

37. What is a scald?

.....

.....

(b) Give any one form of energy produced at part **R** when part **P** is closed.

.....

.....

(c) What energy change takes place in part **Q** when P is closed?

.....

.....

(d) Identify any one factor that can fail a bulb to produce light in the torch when the switch is closed.

.....

.....

45(a) Give the function of the following parts of a mammalian ear:

(i) Eustachian tube

.....

.....

(ii) Pinna

.....

.....

(b) What collective name is given to the three small bones found in the middle ear?

.....

.....

(c) An insect entered Monica's ear, what first aid would you give her?

.....

.....

(c) Why are whales grouped as mammals?

.....

.....

43(a) Name the method used to produce alcohol with a very high concentration.

.....

.....

(b) How is alcohol useful in health management?

.....

.....

(c) State one factor that makes people to start taking alcohol.

.....

.....

(d) State any one danger alcohol causes to an alcoholic.

.....

.....

44. The diagram below shows an electric torch. Use it to answer questions that follow.

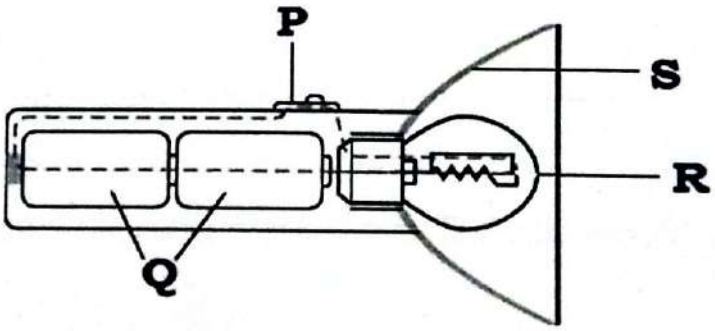

(a) Name part labeled with letter **S.**

.....

.....

(c) Why do local farmers prefer keeping local breeds to exotic breeds?

.....

.....

(d) Why do modern farmers prefer using artificial insemination to natural mating?

.....

.....

48 (a) What is a fracture?

.....

.....

(b) What is the importance of the following in first aid management?

(i) Splints:

.....

.....

(ii) stretcher:

.....

.....

(c) State the difference between an open fracture and a closed fracture.

.....

.....

49 (a) Name two food stuffs are sources of carbohydrates.

(i).....

(ii).....

(b) Which class of food does the body use to make new cells for body growth and repair?

.....

46 (a) Name one drug of dependence.

.....

(b) State the effects of drug dependence to:

(i) An individual

.....

.....

(ii) A community

.....

.....

(c) How can a P. 7 child help his/her friend to avoid abusing drugs?

.....

.....

47. **The diagram below shows a breed of cattle.**

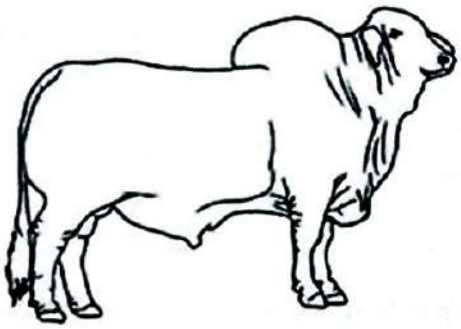

(a) Name the product that is commonly obtained from the breed of cattle shown above.

.....

.....

(b) Mention one other breed of cattle that belongs to the same group as the one shown above.

.....

.....

(d) How do mushrooms obtain their food?

.....

.....

52(a) What change of state takes place when a solid turns into a gas?

.....

.....

(b) What force holds molecules of a solid together?

.....

.

(c) State one difference between a gas and a liquid.

.....

.....

(d) What happens to the volume of water when it freezes?

.....

.....

53. a) Name any two water borne diseases.

(i).....

(ii).....

b) How can water borne diseases be prevented?

(i).....

(ii).....

54a) Explain the role of pulmonary artery in our bodies.

.....

.....

(c) Identify one example of a food deficiency disease in children

.....

.....

50. **The table below shows energy resources and their sources. Complete the gaps by filling the missing parts.**

(i)	Hydro-electricity	.....
(ii)	.....	Minerals
(iii)	Charcoal	.....
(iv)	.....	Cow dung and urine

51. The diagram below shows a moss and a mushroom. Use it to answer the question that follow.

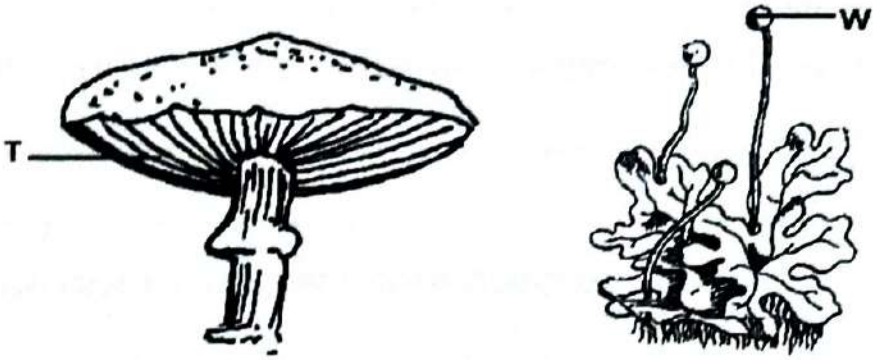

(a) How are the two organisms similar?

.....

.....

(b) Give one difference between the two organisms.

.....

.....

(c) Name part marked **W.**

.....

.....

b) State two clear differences between veins and arteries.

(i).....

.....

(ii).....

.....

b) Suggest the importance of valves in the body.

.....

.....

55. Match the flowing birds with the type of mash they feed on.

Birds age	**Type of mash**
a) 1day to 8 weeks	Growers' mash for layers
b) 8 weeks to 16 weeks	Broilers' mash for broilers
c) 8 weeks on wards	Layers' mash for layers
d) 16 weeks on wards	Chick and duck mash

a) 1day to 8 weeks .....

b) 8 weeks to 16 weeks .....

c) 8 weeks on wards .....

d) 16 weeks on wards .....

END

12. State any one way soil erosion is being reduced in Kabale.

.....

13. Why are school assemblies important in a school?

.....

14. What was the kingdom of the Bachwezi known as?

.....

15. Write term is used to mean the supreme set of laws governing a country.

.....

16. Why is English used in Uganda as the official language?

.....

17. Why is tourism called an invisible trade?

.....

.....

18. Name the ministry that promotes literacy in Uganda.

.....

19. How were rift valley lakes formed?

.....

20. Which animal is commonly referred to as the ship of the desert?

.....

21. Why didn't Kabaka Mwanga of Buganda sign the 1900 Buganda Agreement?

.....

22. Which type of land form covers the largest part of Africa?

.....

23. In which direction will David face if he turns anti-clock wise from North through 90^0?

.....

SECTION A (40 marks)

1. What does the symbol below represent on a map?

.....

2. State the title given to the head of all civil servants at district level.

.....

3. Who were the first foreigners to come to East Africa?

.....

4. Why should every home have a granary?

.....

5. Mention one river in Uganda that flows into Lake Victoria.

.....

6. Name the best type of transport for carrying flowers from Uganda to Europe.

.....

7. How did Dr. Albert Cook promote the health sector in Uganda?

.....

8. Why is Africa regarded as a Cradle land of man-kind?

.....

.....

9. Which aspect of climate influences settlement of people in an area?

.....

10. State the organization that works to save lives of accident victims and peoplewounded in wars.

.....

11. How are the Masai and Karimojong similar in their occupation?

.....

33. Name one instrument of power given to Yoweri Kaguta Museveni when he was sworn in as president of Uganda.

.....

34. Which European country did Uganda help in World War II?

.....

35. Why did people of Bunyoro fight the British during the rule of Omukama Kabalega?

.....

For each of the questions 36-40, answer either Christian or Islamic but not both alternatives in a number.

36. **Either:** Why did God make man the summit of His creation?

.....

Or: Why did Allah make man the summit of His creation?

.....

37. **Either:** Which angel announced the birth of Jesus Christ to Virgin Mary?

.....

Or: How is angel Jibril related to the spread of Islam?

.....

38. **Either:** Which creature is blamed for the down fall of man?

.....

Or: How did Ibris cause Adam to leave Janah?

.....

39. **Either:** Give one evidence to show that Noah was faithful to God.

.....

Or: Give one evidence to show that Prophet Nuhu was faithful to Allah.

.....

24. What is a bye-election?

.....

25. Mention any one way in which the Police keeps law and order in the country.

.....

Study the map below and answer questions 26,27 & 28.

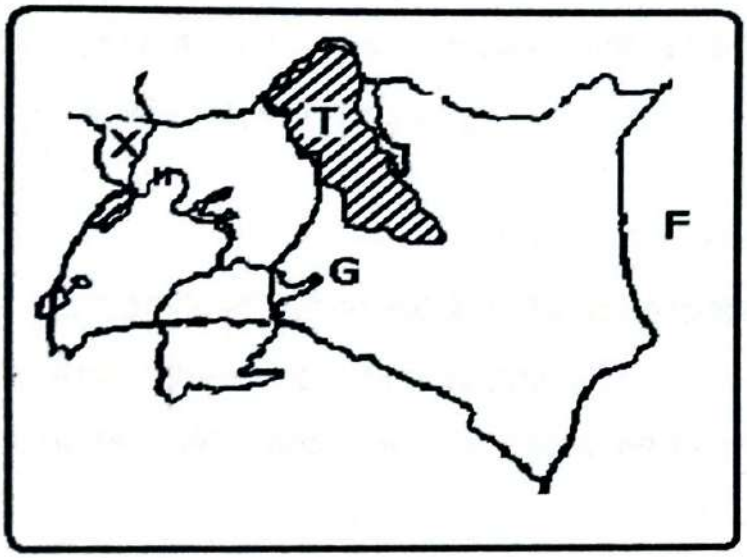

26. Name country marked F.

.....

27. Give the main cash crop grown in area X.

.....

28. Why was area marked T transferred to Kenya?

.....

29. How did Alexander Mackay promote Education in Uganda?

.....

30. How was F.D. Lugard connected to the Imperial British East-Africa Company?

.....

31. State one contribution of the Arab Traders in Uganda.

.....

32. Why are the Miombo woodlands of central Tanzania poorly inhabited?

.....

43. a) State one of the children's rights.

.....

b) Mention any two ways how children's rights are violated.

i) .....

ii) .....

c) Which local council I executive is responsible for protecting children's rights?

.....

44. **Below is a map of Africa, use it to answer the questions that follow.**

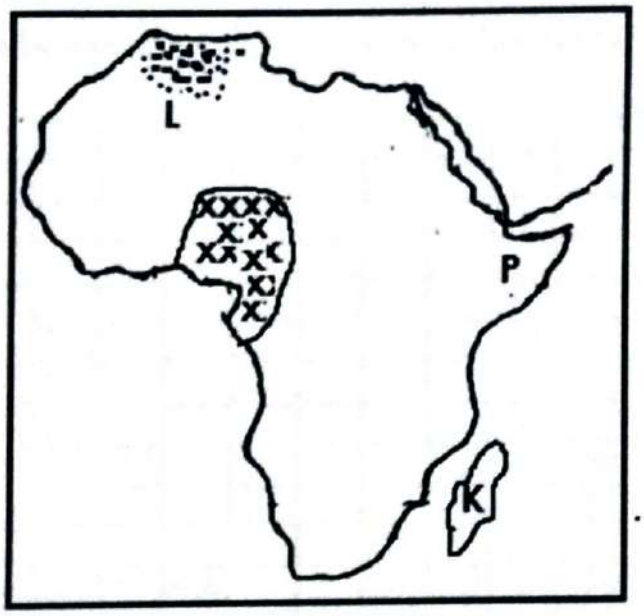

a) Name the:

i) Mountain marked L .....

ii) Country marked K .....

b) What name is given to the region of Africa marked P?

.....

c) Why does the area shaded xxx receive rainfall throughout the year?

.....

40. **Either:** Give one reason why a Christian should be friendly to a neighbour.

.....

Or: Give one reason why a Muslim should be friendly to a neighbour.

.....

SECTION B

41. **Match the following items in list A with those in list B correctly.**

List A	List B
Lake Katwe	faulting
Lake Albert	man's activities
Lake Kyoga	volcanicity
Kabaka's lake	down warping

a) Lake Katwe .....

b) Lake Albert .....

c) Lake Kyoga .....

d) Kabaka's lake .....

42. a) What is a national budget?

.....

.....

b) Give two reasons why a school needs a budget.

i) .....

ii) .....

c) How do the citizens of Uganda benefit from the implementation of the National Budget?

.....

47. a) What is population?

.....

.....

b) State two factors that influence population growth in Uganda.

i).....

ii).....

c) Write one natural factor that checks on population growth.

.....

48. a) Name one game park in East Africa where tourists may find each of the following:

i) Flamingo birds .....

ii) Mountain gorillas .....

b) State any two problems facing wildlife in game parks of East Africa.

i) .....

ii) .....

49. a)What does the term 'migration ' mean?

.....

.....

b) State any two causes of Bantu migration into East Africa.

i).....

ii).....

c) Mention any one way of controlling rural-urban migration.

.....

50. a) Give any two uses of land as a major natural resource.

i. .....

ii. .....

45. a) What is archaeology?

.....

b) State any two ways in which historical sites are important to people.

I. .....

II. .....

c) Why is Olduvai Gorge remembered in the history of mankind?

.....

46. **Study the diagram below and answer questions that follow.**

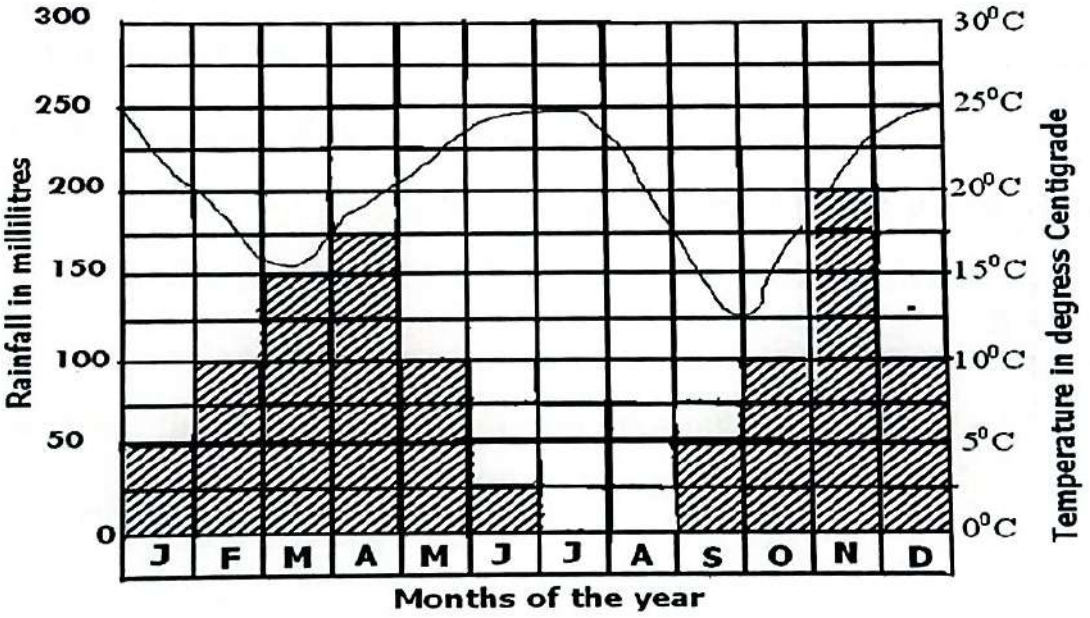

(a)Name the climate shown in the graph above.

.....

(b)Give any one farming activity suitable for July and August.

.....

(c) Identify the wettest month of the year.

.....

(d)Calculate the temperature range.

.....

b) Give any one reason why Jesus Christ performed miracles.

.....

c) What enabled Jesus to perform miracles?

.....

Or:

a) Mention any two miracles performed by Prophet Mohammed.

i) .....

ii) .....

b) Give any one reason why Prophet Mohammed performed miracles.

.....

c) What enabled Prophet Mohammed to perform miracles?

.....

53. **Either:**

a) State the special event that took place on the following days;

i) Good Friday: .....

.....

ii) Easter Sunday: .....

.....

iii) Palm Sunday: .....

.....

b) Name the place where Jesus was crucified.

.....

Or:

a) Mention two groups of people who are supposed to get zakat.

i) .....

ii) .....

b) Apart from land, give any two other major resources in East Africa.

i) .....

ii) .....

For each of the questions 51-55, answer Either the Christian or Islamic questions but not Both alternatives in a number.

51. **Either:**

a) What is marriage according to Christianity?

.....

.....

b) State two reasons why adult Christians marry.

i) .....

ii) .....

c) Mention one gift God gives to married people .

.....

Or:

a) What is Nikkah according to Islam?

.....

b) Mention two reasons why adult moslems perform Nikkah.

i) .....

ii) .....

c) Mention any one gift Allah gives to married people.

.....

52. **Either:**

a) Mention any two miracles performed by Jesus Christ.

i) .....

ii) .....

b) Give any two reasons why Muslims give zakat.

i) .....

ii) .....

c)Mention any one item that can be given as Zakat.

.....

54. **Either:**

a) Write down any two gospel books in the Bible.

i) .....

ii) .....

b) Write down any two gospel writers according to the Bible.

i) .....

ii) .....

Or: a) Write down any two books in Islamic faith.

i) .....

ii) .....

b)Mention two prophets to whom Allah revealed the holy books.

i) .....

ii) .....

FOR BOTH;

55. a) Identify two similar beliefs between Christians and Moslems.

i) .....

ii) .....

b) Give any two similar practices between Christians and Moslems.

i) .....

ii) .....