Candidate's Name: My copy @ SMK DERRY

Signature: .....

Random No.					Personal No.		

(Do not write your School/Centre Name or Number anywhere on this booklet)

P530/1
BIOLOGY
(Theory)
Paper 1
Nov./Dec. 2019
2½ hours

UGANDA NATIONAL EXAMINATIONS BOARD

Uganda Advanced Certificate of Education

BIOLOGY
(THEORY)

Paper 1

2 hours 30 minutes

INSTRUCTIONS TO CANDIDATES:

This paper consists of Sections **A** *and* **B**.

Answer **all** *questions in both Sections.*

Write answers to Section **A** *in the boxes provided and answers to Section* **B** *in the spaces provided.*
No *additional sheets of paper should be inserted in this booklet.*

For Examiners' Use Only			
Section		Marks	Examiner's Signature & No.
A	1- 40	40	
B	41		
	42		GUIDE
	43		
	44		
	45		
	46		
Total		100	

©2019 Uganda National Examinations Board

SECTION A (40 MARKS)

Write the letter corresponding to the right answer in the box provided. Each question in this section carries **one** *mark.*

1. In birds, hatchlings following the first thing they see, is an example of

   A. insight.
   B. association.
   C. habituation.
   D. imprinting.

   Clegg
   Poole 557
   BS 612

   D

2. Which one of the following graphs shows the correct relationship between the rate of breathing with increase in amount of exercise in an athlete?

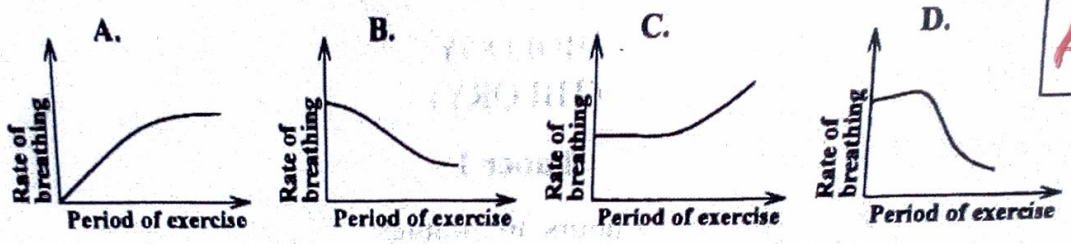

   A

3. Which one of the following methods is used by the bony fish to regulate its internal environment?

   A. Actively takes up salts through its gills.
   B. Constantly drinks water.
   C. Produces isotonic urine in small quantities.
   D. Produces dilute urine in large quantities.

   free

4. Which one of the following animal tissues serves a similar function like the parenchyma tissue in plants?

   A. Collagen tissue.
   B. Cartilage tissue.
   C. Elastic tissue.
   D. Areolar tissue.

   Both are packaging tissues

   D

   BS 168

5. The DNA of an organism contains 17.5% cytosine nucleotides. What would be the percentage of thymine nucleotides in its DNA?

   A. 96.5
   B. 65.0
   C. 60.0
   D. 32.5

   A : T
   G : C

   (17.5 + 17.5) = 35
   100 − 35 = 65 → A & T
   T = 65/2 = 32.5

   D

An organism was found to possess conspicuous flagella, chloroplasts and a protein coat. The phylum to which the organism belongs is the

A. protozoa.
B. chlorophyta.
C. ascomycota.
D. bryophyta.

free

7. Which one of the following situations could result in evolution? When

A. organisms have adapted to the new environment.
B. there is inbreeding.
C. genetic equilibrium is upset. — when HWP is invalid
D. there is no gene flow in a population.

C

8. In a heavily polluted aquatic ecosystem, the group of organisms with the highest concentration of pollutants in their bodies are the

A. tertiary consumers.
B. secondary consumers.
C. primary consumers.
D. primary producers.

bioamplification / biomagnification

A

9. Haemophilia is a sex-linked trait caused by a recessive gene. When a normal man marries a carrier woman for haemophilia, the probability of the couple producing a normal son is

A. 0%.
B. 25%.
C. 50%.
D. 75%.

X^HY X X^HX^h

X^H Y X X^H X^h

X^HX^H X^HX^h X^HY X^hY

C

$\frac{1}{2}$ normal son out of two sons

10. Which one of the following is **not** an advantage of insects having larval forms that are markedly different from adults?

A. Allows the species to survive predators.
B. Enables adults to recognise their young easily.
C. Allows the species to exploit different food sources.
D. Limits stiff competitions between adults and larvae.

B

11. A plant has 20 chromosomes in its receptacle cells. What would be the number of chromosomes in its endosperm cells?

A. 80.
B. 40.
C. 30.
D. 10.

The endosperm is triploid so the number of chromosome in gamete (n) = 10

Endosperm cells (3n) = 10 × 3 = 30 chromosome

C

Turn Over

RuBP

12. During photosynthesis, the carbon fixing compound is produced from

A. glucose.
B. glycerate-3-phosphate.
C. unstable 6-carbon sugar.
D. triose phosphate.

during regeneration

D

13. During muscular contraction, the release of Ca^{2+} causes

A. myosin binding sites to be exposed.
B. tropomyosin to attach to myosin.
C. myosin to detach from actin.
D. troponin to bind with actin.

Causes the tropomyosin to be displaced

A

14. Which one of the following organisms A, B, C and D would most require a vascular system?

Organism	Surface area (cm^2)	Volume (cm^3)	
A.	1	0.25	4
B.	6	3	2
C.	16	10	1.6
D	12	8	1.5

D

15. Which one of the following **least** favours the emergence of species?

A. Selective breeding.
B. Stable environmental conditions.
C. Artificial selection.
D. Gene flow in a population.

No/Less variations

B

16. Which one of the following is responsible for destroying worn-out organelles in a cell?

A. Lysosome.
B. Ribosome.
C. Endoplasmic reticulum.
D. Mitochondria.

BS 137

A

17. Which one of the following features of fungi differentiates them from other heterotrophs?

A. Storing carbohydrate as glycogen.
B. Absorbing nutrients by active transport.
C. Digesting food outside the body.
D. Obtaining carbon from organic materials.

C

18. What stage of cell division is shown in figure 1?

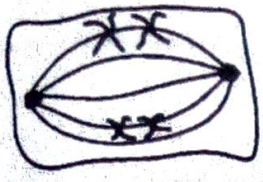

Fig. 1

Chromosomes line up around the equator of the spindle, attached by their centromeres to the spindle fibres

A. Metaphase of mitosis.
B. Metaphase of meiosis.
C. Prophase II of meiosis.
D. Metaphase I of meiosis.

BS 780
Toole 137

D

19. The rate of an enzyme controlled reaction becomes constant at a certain point with increase in substrate concentration because

A. enzymes are denatured.
B. active sites become fully occupied.
C. end-product inhibition occurs.
D. cofactors become used up.

BS 120
Toole 38
FA 92

B

20. Which one of the following would occur at a synapse treated with a poison which renders cholinesterase inactive?

Toole 535
BS 562

A. Conduction of impulses ceases.
B. Conduction speed of impulses reduces.
C. Conduction of impulses in post synaptic neurone continues.
D. The direction of impulses reverses.

C

21. The oxidation of a respiratory substrate occurs according to the following equation:

$$C_{18}H_{36}O_2 + 26O_2 \rightarrow 18CO_2 + 18H_2O$$

What is its respiratory quotient after complete oxidation in the body?

A. 0.7
B. 0.8
C. 0.9
D. 1.0

$RQ = \frac{CO_2 \text{ produced}}{O_2 \text{ consumed}}$

$= \frac{18}{26} = 0.7$

A

22. Which one of the following explains why sucrose is a good transport substance in plants? It

A. can easily be hydrolysed.
B. easily enters the general metabolic pathways.
C. has high solubility thus forming high concentration.
D. is highly abundant in plants.

C

BS 455

Turn Over

23. The mammalian eye receives fewer stimuli per unit time compared to insect compound eye because the

A. mammalian eye occupies a smaller part on the head than the insect eye.
B. mammalian eye has less focusing units than the insect eye.
C. time lapse between reception of light, stimulus and recovery is shorter in the insect eye.
D. mammalian eye has a smaller field of view.

B

FA 309

24. The type of learning that prevents the animal from responding to repeated stimulation is

A. insight.
B. conditioning.
C. imprinting.
D. habituation.

BS 612
Clegg 412

D

25. What are the triplet bases on the template DNA strand if the anticodon of the tRNA is ACG?

A. ACG.
B. UGC.
C. TGT.
D. GGC.

A

26. Denitrifying bacteria reduce nitrates in order to

A. release energy for their respiration.
B. take up carbon dioxide in the environment.
C. release carbon dioxide in the environment.
D. release oxygen for their respiration.

D

27. Which one of the following is an effect of auxins in plant growth? It inhibits

A. fruit formation.
B. the development of side branches.
C. growth of the entire plant.
D. growth of adventitious roots.

~ Apical dominance

B

28. Which one of the following occurs in haploid parthenogenesis? Eggs are formed by

A. meiosis and develop without being fertilised.
B. mitosis and develop without being fertilised.
C. meiosis and are fertilised.
D. mitosis and are fertilised.

BS 702

A

NOVEMBER - DEC... EXAMINATIONS BOARD

29. Which one of the following is true about the contracted mammalian muscle fibril? The

A. light part of the A-band increases.
B. I-band and H-zone increases.
C. dark ends of the A-band increase. — bcz crossbridges form
D. dark ends of the A-band decrease.

C

Toole 568

30. An individual with diabetes insipidus feels thirsty most of the time because

A. glucose in the urine causes less water to be lost in form of urine.
B. there is dehydration due to much water loss.
C. glucose removed from the blood stream appears in small amounts in urine.
D. glucose regulation is an endothermic reaction in which heat energy is absorbed.

B

31. Mosquitoes are successful feeders on human blood because they

A. possess specialised mouth parts.
B. employ many phases in their development. BS 235
C. release anti-coagulant into the human blood. Toole 291
D. have attachment devices.

C

32. Which one of the following is true when the ovum is not fertilised in humans?

A. The Graafian follicle increases in size.
B. The uterine lining thickens.
C. The Graafian follicle degenerates. — and menstruation commences
D. Ovulation occurs.

C

33. An adult whose diet consists of only milk may suffer from

A. insufficient iron synthesis. — Milk lacks iron
B. low energy content.
C. high fat contents which blocks the bone marrow.
D. break down of red blood cell.

A

34. Which of the animals A, B, C and D would have the highest rate of diffusion across its surface?

Animal	Surface Area (mm^2)	Volume (mm^3)	
A.	2	1	2
B.	4	10	0.4
C.	6	20	0.3
D.	8	40	0.2

One with a large SA:VR

A

35. In which one of the following organisms is the gametophyte a dominant generation?

A. Ferns.
B. Mosses.
C. Conifers.
D. Flowering plants.

BS 38

B

36. Which of the following explains why intercellular fluid is drawn back at the venous end of the capillary?

A. Fewer blood capillaries at the venous side.
B. Low levels of ultra-filtration at the venous end.
C. High blood pressure at the venous end.
D. High osmotic pressure of plasma proteins.

D

37. In estimating the population of a weed in an area of 1000 m^2, a $1m^2$ quadrat was thrown 50 times and the total number of weeds counted were 60. What was the estimated population of the weed?

A. 20.
B. 300.
C. 833.
D. 1,200.

$SD = \frac{1000}{50} = 20$

$No = 20 \times 60 = 1200$

D

38. Whales and sharks are aquatic animals with stream lined shapes, dorsal fins, flippers and large tails yet they are not of the same class. This is an example of

A. divergent evolution.
B. convergent evolution.
C. adaptive radiation.
D. natural selection.

BS 898

B

39. Dioecious plants are rare despite the advantages of cross pollination because of

A. increased distance between individual plants which requires a lot of space.
B. increased competition among the plants for resources.
C. production of few seeds.
D. large wastage of pollen.

D

40. The following processes are involved in bulk transport of materials in a cell **except**

A. exocytosis.
B. phagocytosis.
C. diffusion.
D. pinocytosis.

Endocytosis

C

SECTION B (60 MARKS)

Write answers in the spaces provided.

Toole 281

41. (a) What is a limiting factor? ***(03 marks)***

A limiting factor is a factor which is nearest to its minimum value in a chemical process that is affected by more than one factor. 03max

Any change in the level of this factor, will affect the rate of a chemical process.

(b) Describe a state where carbon dioxide is a limiting factor in photosynthesis. ***(04 marks)***

When light and temperature are optimum; and carbondioxide concentration is low, the rate of photosynthesis can't increase further;

The normally low atmospheric carbondioxide concentration of 0.04% is a major limiting factor to photosynthesis;

04

(c) Give three differences between the light dependent and light independent reactions of photosynthesis. ***(03 marks)*** any 03

Light dependent	Light independent
Occurs in thylakoids	Occurs in stroma
Requires light	Does not require light
Reduces NADP	Oxidises NADP
Forms ATP	Uses up ATP
Oxygen is produced	No oxygen produced
Products are ATP and $NADPH_2$	Products are sugars and NADP
Rawmaterials are water, NADP, ADP, Pi	Reo Are CO_2, ATP, $NADPH_2$.

42. (a) **Explain the effects of the following:**

(i) **Heterozygote advantage in a population with increasing gene flow.** *(04 marks)*

Increasing gene flow reduces recessive alleles or disadvantageous alleles in the population as it introduces new alleles that reduces the selection pressure for the heterozygote advantage. ie (The disadvantageous allele is diluted) eg sickle cell in America; as blacks married the whites, the allele was diluted. 02marks

(ii) **Isolation of individuals of a population for generations.** *(02 marks)*

In isolated populations, mutations and natural selection occur differently causing them to develop into distinct species; resulting into variation; 02 marks

(b) **Explain why the sickle cell trait is prevalent in malaria prone areas.** *(04 marks)*

Sickle cell trait is caused by an allele in a heterozygous state. Malaria acts as a selection pressure for the heterozygote promoting their existence in a population with high malaria incidence; 02marks

(a) **Give the importance of synapses in the nervous system.** *(04 marks)*

(i) Transmit information between neurones;

(ii) Pass impulses in one direction only;
Allows facilitation

(iii) Act as junctions;
Allow adaptation to intense stimulation

(iv) Filter out low level stimuli

any 02 max

(b) **Explain why the;**

(i) **production of acetylcholinesterase at the synapse is important during nerve impulse transmission.** *(04 marks)*

Acetylcholinesterase hydrolyses acetylcholine into choline and acetyl; This prevents continuous firing of impulses / action potentials; and successive impulses merging at the synapse;

02 marks

(ii) **impermeability of the axon membrane to sodium ions in a part of a neuron helps to maintain the resting potential in that part.** *(02 marks)*

Impermeability of the membrane prevents entry of sodium ions which would cause depolarisation; the inside of the axon remains more ~~pos~~ negative relative to the outside of the axon; hence a resting potential;

02 marks

44. Figure 2 shows the transfer of energy in catabolic and anabolic reactions in a living cell.

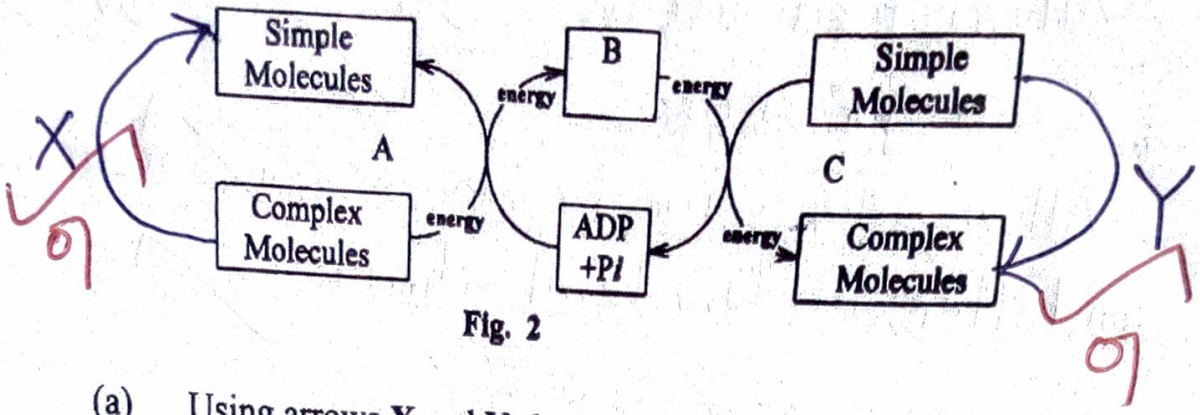

Fig. 2

(a) Using arrows **X** and **Y** show the direction of the catabolic and anabolic reactions respectively on figure **2**. *(02 marks)*

(b) Name the compound marked **B** and **one** example of the processes represented by **A** and **C**. *(03 marks)*

A Respiration / Deamination

B Adenosine Triphosphate

C Photosynthesis, DNA replication, Protein synthesis

any one point

(c) Outline **two** roles of ATP in living cells. *(02 marks)*

- Supply energy for cell division, transport, secretion, movement, activation of chemicals, anabolic processes.
- Temporary energy storage
- Provide a phosphate group for phosphorylation.

any 02

(d) Give **three** differences between oxidative phosphorylation and photophosphorylation. *(03 marks)*

Oxidative	Photophosphorylation
Occurs in all organisms	Occurs in photosynthetic organisms
Occurs in mitochondria	Occurs in chloroplast
Last electron acceptor is oxygen	Is NADP
First electron donor is hydrogen	Is water
Energy is from oxidation of substrates	Energy is from sunlight
Products are ATP and water	Products are ATP, O_2, and $NADPH_2$

any 03

15. **Figure 3 shows the relationship between air temperature from summer through winter and body temperature of hibernating and non-hibernating endotherms.**

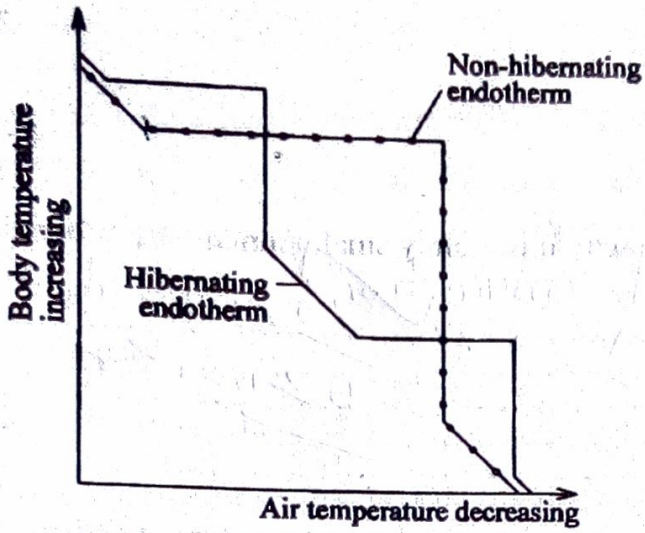

extracted from FA page 241 Fig 15.10

Fig. 3

(a) **Explain the changes in the body temperature when the air temperature decreases in the;**

(i) **hibernating endotherm.** *(03 marks)*

The body temperature decreases very rapidly due to a decrease in metabolic rate. The homeostatic set point is then lowered so that the animal maintains a constant body temperature at a lower level than normal. When air temperature falls too low, body temperature decreases very rapidly as control mechanisms fail and body loses a lot of heat.

03max

(ii) **non-hibernating endotherm.** *(03 marks)*

The animal maintains a constant body temperature over a wider range of environmental temperature, as the temperature control mechanism fails, so low body temperature decreases very rapidly due to breakdown of the body's temperature control mechanisms.

03max

Turn Over

UGANDA NATIONAL EXAMINATIONS BOARD - DECEMBER, 2019

(b) What is the importance of hibernation in mammals that live in cold regions? (02 marks)

Reduces food consumption; as metabolic rate lowers; 02 marks

(c) Explain why it is mainly small animals that hibernate. (02 marks)

Small organisms have a large surface area to volume ratio; so lose heat more rapidly; during their metabolism; 02 marks

46. (a) (i) Distinguish between water potential and solute potential. (02 marks)

Water potential is the tendency of water to move from one system to another whereas
Solute potential is the extent to which solute molecules lower the water potential of a system. 02 marks

(ii) Explain why the water potential in the roots is higher than the water potential in the leaves in plants. (02 marks)

In the leaves, water is lost by evaporation during transpiring and also photosynthesis produces sugars hence lowering the water potential while in roots there is absorption of water from the soil; which increases water potential; 02 marks

(b) Describe how the;

(i) root pressure contributes to the transport of water in plants. (03 marks)

Root pressure is generated when the endodermal cells ~~actively secrete cells~~ actively secrete salts into the xylem tissue creating a low water potential in the xylem. This draws water into the xylem by osmosis which causes a pressure in the roots that pushes water up the xylem. 03 marks

(ii) **structure of cells of the endodermis is adapted for their role of transport of water in a plant.** **(03 marks)**

- Cells have an impermeable strip of suberin; the carparian strip; which controls the passage of water into the xylem;
- Numerous mitochondria to provide energy for active transport;
- Numerous starch granules in endodermal cells which act as energy sources;
- Infoldings of the cell wall which increase surface area of the cell membrane for transfer of solutes.

FA 186

03MGA

Reference textbooks:

Understanding biology by Susan Toole
Biological science
Advanced biology by Micheal Kent
Functional approach
Water and aqueous solutions by Simpkins
Advanced biology by Clegg
Biology in Context
Coursebook by Johnes (Cambridge)
Biology around us by Graham.
Advanced biology by Grace Monger & Reiss.
Campbell
Encyclopedia of biology.

END

SMKDERRY 0702929884

Reference textbooks:

Understanding biology by Susan Toole
Biological science
Advanced biology by Micheal Kent
Functional approach
Water and aqueous solutions by Simpkins
Advanced biology by Clegg
Biology in Context
Coursebook by Johnes (Cambridge)
Biology around us by Graham.
Advanced biology by Grace Monger & Reiss.
Campbell
Encyclopedia of biology.

END

SMKDERRY 0702929884