Revision Guide

Cambridge
International AS and A Level

NEW for 2016 exams

Physics

Second Edition

Richard Woodside
Series editor: Mary Jones

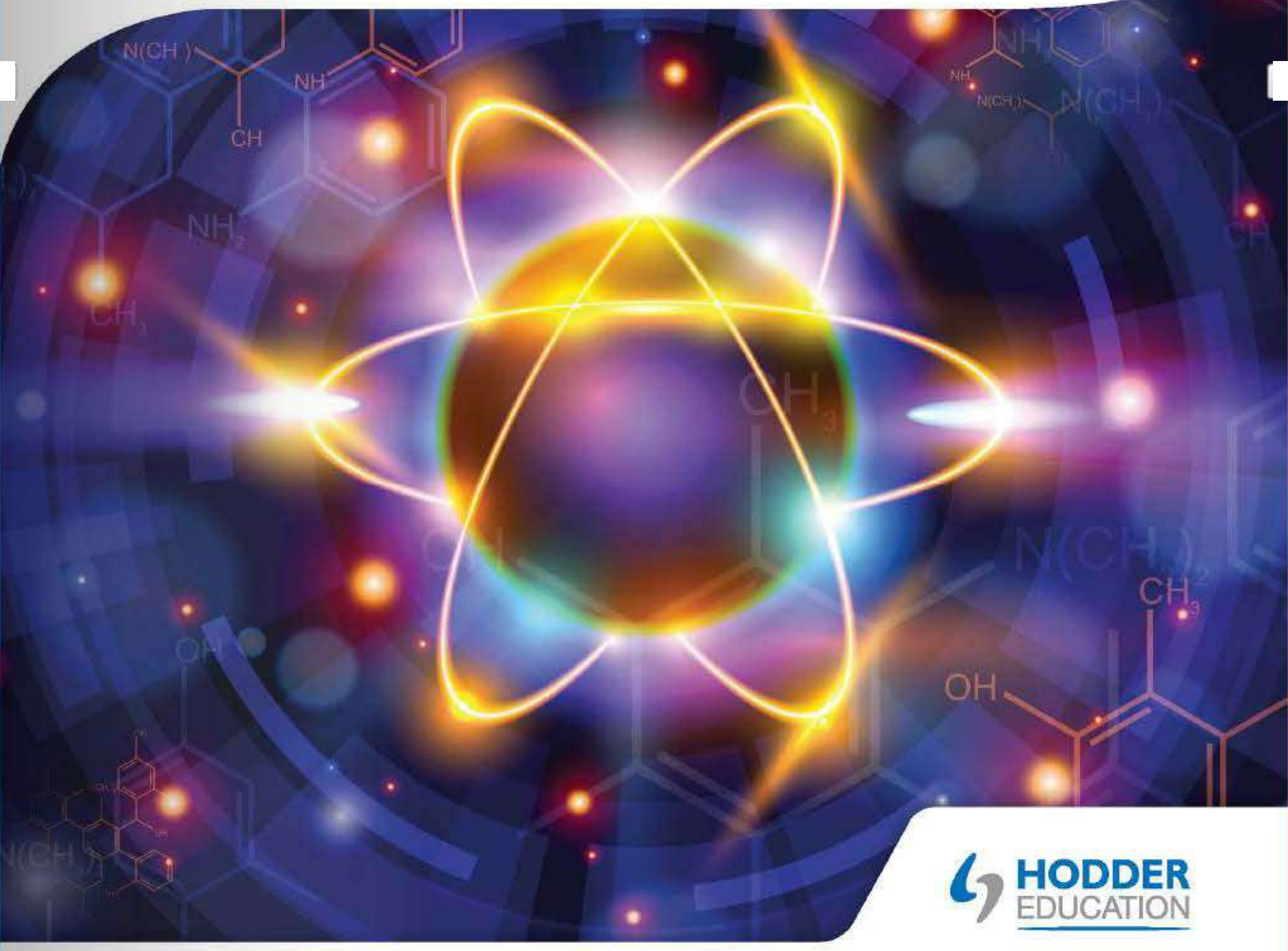

HODDER EDUCATION

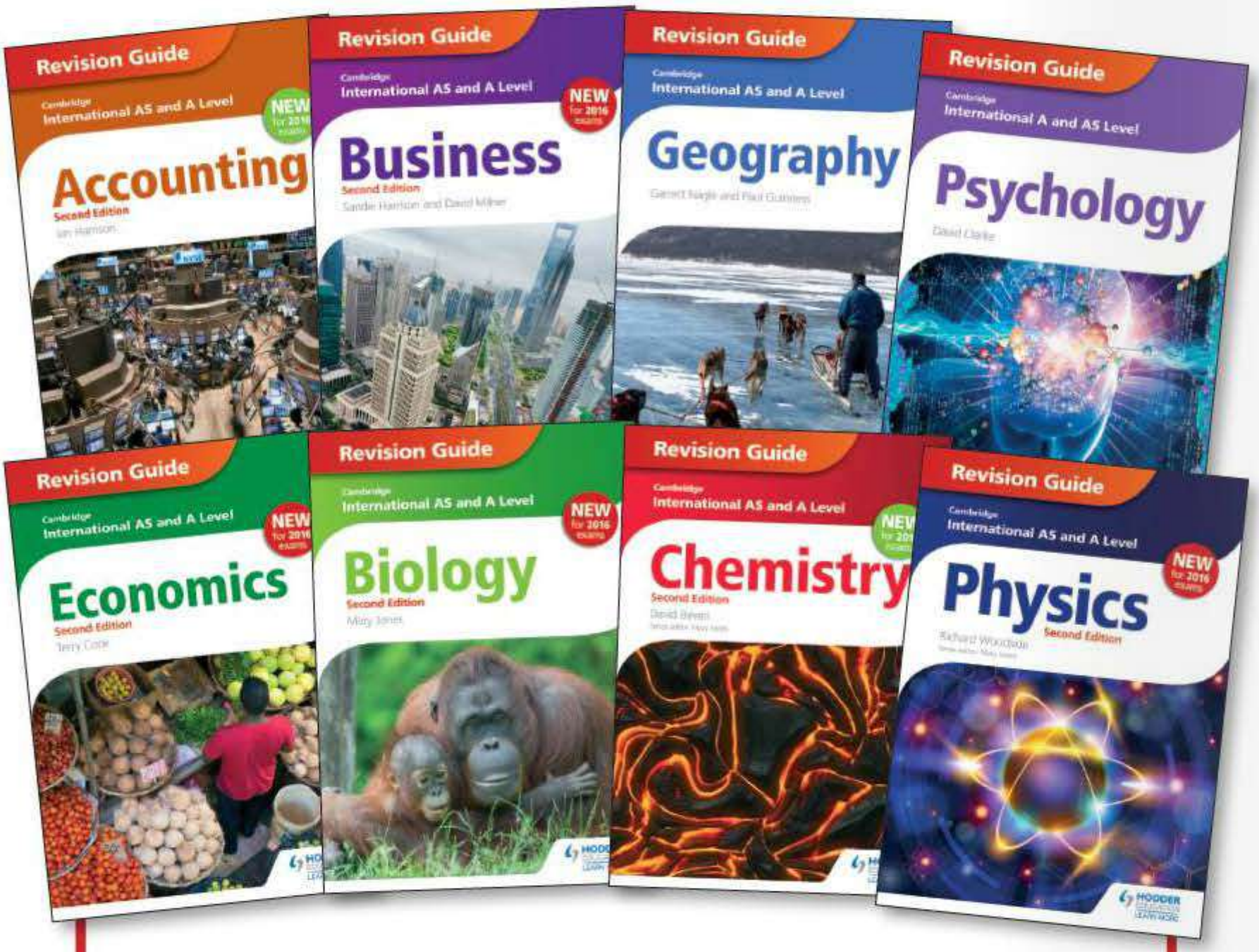

If you found this guide helpful you can get the same quality revision support for your other exams.

- Plan and pace your own revision
- Improve your exam technique
- Get advice from experienced examiners

Visit **www.hoddereducation.com/revision** to discover our complete range of revision material.

Revision Guide

Cambridge

International AS and A Level

Physics

Second Edition

Richard Woodside
Series editor: Mary Jones

HODDER EDUCATION
LEARN MORE

Hodder Education, an Hachette UK company, Carmelite House, 50 Victoria Embankment, London EC4Y 0DZ

Orders
Bookpoint Ltd, 130 Milton Park, Abingdon, Oxfordshire OX14 4SB
tel: 01235 827827
fax: 01235 400401
e-mail: education@bookpoint.co.uk
Lines are open 9.00 a.m.–5.00 p.m., Monday to Saturday, with a 24-hour message answering service. You can also order through the Hodder Education website: www.hoddereducation.co.uk

© Richard Woodside 2015
ISBN 978-1-4718-2943-7

First printed 2015
Impression number 5 4 3 2 1
Year 2019 2018 2017 2016 2015

All rights reserved; no part of this publication may be reproduced, stored in a retrieval system, or transmitted, in any form or by any means, electronic, mechanical, photocopying, recording or otherwise without either the prior written permission of Hodder Education or a licence permitting restricted copying in the United Kingdom issued by the Copyright Licensing Agency Ltd, Saffron House, 6–10 Kirby Street, London EC1N 8TS.

Cover photo reproduced by permission of Uladzimir Bakunovich/Fotolia
Typeset by Greenhill Wood Studios
Printed in Spain

This text has not been through the Cambridge endorsement process.

Hachette UK's policy is to use papers that are natural, renewable and recyclable products and made from wood grown in sustainable forests. The logging and manufacturing processes are expected to conform to the environmental regulations of the country of origin.

Get the most from this book

Everyone has to decide his or her own revision strategy, but it is essential to review your work, learn it and test your understanding. This Revision Guide will help you to do that in a planned way, topic by topic. Use the book as the cornerstone of your revision and don't hesitate to write in it — personalise your notes and check your progress by ticking off each section as you revise.

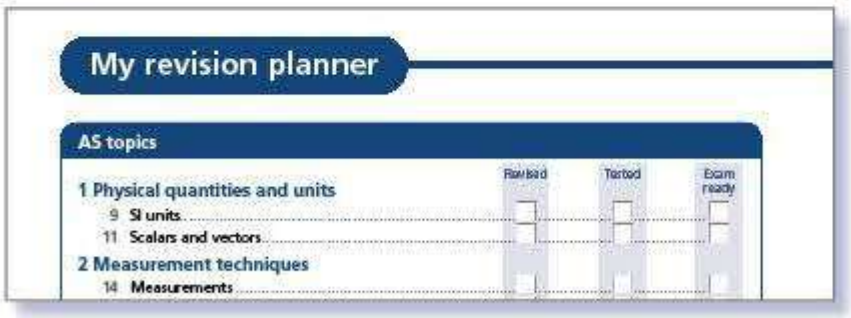

Tick to track your progress

Use the revision planner on pages 4 and 5 to plan your revision, topic by topic. Tick each box when you have:

- revised and understood a topic
- tested yourself
- practised the exam-style questions

You can also keep track of your revision by ticking off each topic heading in the book. You may find it helpful to add your own notes as you work through each topic.

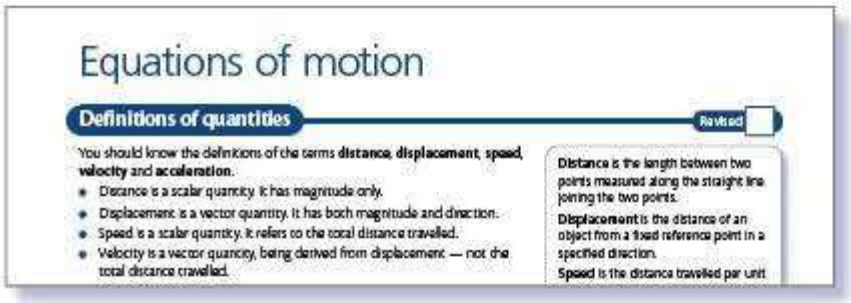

Features to help you succeed

Expert tips

Throughout the book there are tips from the experts on how to maximise your chances.

Typical mistakes

Advice is given on how to avoid the typical mistakes students often make.

Definitions and key words

Clear, concise definitions of essential key terms are provided on the page where they first appear.

Key words from the syllabus are highlighted in bold for you throughout the book.

Exam-style questions

Exam-style questions are provided for AS and A level. Use them to consolidate your revision and practise your exam skills.

Now test yourself

These short, knowledge-based questions provide the first step in testing your learning. Answers are at the back of the book.

Revision activities

These activities will help you to understand each topic in an interactive way.

My revision planner

AS topics

	Revised	Tested	Exam ready
1 Physical quantities and units			
9 SI units	☐	☐	☐
11 Scalars and vectors	☐	☐	☐
2 Measurement techniques			
14 Measurements	☐	☐	☐
17 Errors and uncertainties	☐	☐	☐
3 Kinematics			
19 Equations of motion	☐	☐	☐
4 Dynamics			
27 Momentum and Newton's laws of motion	☐	☐	☐
30 Linear momentum and its conservation	☐	☐	☐
5 Forces, density and pressure			
33 Types of force	☐	☐	☐
34 Turning effects of forces	☐	☐	☐
35 Equilibrium of forces	☐	☐	☐
38 Density and pressure	☐	☐	☐
6 Work, energy and power			
40 Work and efficiency	☐	☐	☐
41 Energy conversion and conservation	☐	☐	☐
42 Potential energy and kinetic energy	☐	☐	☐
43 Power	☐	☐	☐
7 Deformation of solids			
45 Elastic and plastic behaviour	☐	☐	☐
46 Stress and strain	☐	☐	☐
8 Waves			
48 Progressive waves	☐	☐	☐
50 Transverse and longitudinal waves	☐	☐	☐
50 Determination of frequency and wavelength of sound waves	☐	☐	☐
51 Doppler effect	☐	☐	☐
52 Electromagnetic spectrum	☐	☐	☐
9 Superposition			
54 Stationary waves	☐	☐	☐
57 Diffraction	☐	☐	☐
57 Interference	☐	☐	☐
10 Electric fields			
61 Concept of an electric field	☐	☐	☐
61 Uniform electric fields	☐	☐	☐

	Revised	Tested	Exam ready
11 Current of electricity			
63 Electric current	☐	☐	☐
64 Potential difference and power	☐	☐	☐
65 Resistance and resistivity	☐	☐	☐
12 D.C. circuits			
68 Practical circuits	☐	☐	☐
70 Kirchhoff's laws	☐	☐	☐
72 Potential dividers	☐	☐	☐
13 Particle and nuclear physics			
75 Atoms, nuclei and radiation	☐	☐	☐
78 Fundamental particles	☐	☐	☐
AS experimental skills and investigations			
81 Making measurements	☐	☐	☐
83 Presentation of data and observations	☐	☐	☐
86 Evaluation of evidence	☐	☐	☐
88 Evaluating the experiment	☐	☐	☐
90 **AS exam-style questions and answers**			

A level topics

	Revised	Tested	Exam ready
14 Motion in a circle			
97 Kinematics of uniform circular motion	☐	☐	☐
99 Centripetal acceleration and centripetal force	☐	☐	☐
15 Gravitational fields			
101 Gravitational forces between point masses	☐	☐	☐
104 Gravitational potential	☐	☐	☐
16 Ideal gases			
107 Equation of state	☐	☐	☐
107 Kinetic theory of gases	☐	☐	☐
109 Kinetic energy of a molecule	☐	☐	☐
17 Temperature			
111 Thermal equilibrium	☐	☐	☐
111 Temperature scales	☐	☐	☐
18 Thermal properties of materials			
113 Specific heat capacity and specific latent heat	☐	☐	☐
119 Internal energy and the first law of thermodynamics	☐	☐	☐
19 Oscillations			
121 Simple harmonic oscillations	☐	☐	☐

My revision planner

	Revised	Tested	Exam ready
124 Energy in simple harmonic motion	☐	☐	☐
125 Damped and forced oscillations, resonance	☐	☐	☐
20 Waves			
128 Production and use of ultrasound in diagnosis	☐	☐	☐
21 Communication			
132 Communication channels	☐	☐	☐
134 Modulation	☐	☐	☐
136 Digital communication	☐	☐	☐
138 Relative merits of channels of communication	☐	☐	☐
140 Attenuation	☐	☐	☐
22 Electric fields			
142 Electric forces between point charges	☐	☐	☐
143 Electric field of a point charge	☐	☐	☐
143 Electric potential	☐	☐	☐
23 Capacitance			
146 Capacitors and capacitance	☐	☐	☐
149 Energy stored in a capacitor	☐	☐	☐
24 Current of electricity and D.C. circuits			
150 Sensing devices and potential dividers	☐	☐	☐
25 Electronics			
152 The ideal operational amplifier	☐	☐	☐
153 Operational amplifier circuits	☐	☐	☐
156 Output devices	☐	☐	☐
26 Magnetic fields			
158 Concept of magnetic field	☐	☐	☐
160 Force on a current-carrying conductor	☐	☐	☐
162 Force on a moving charge	☐	☐	☐
168 Magnetic fields due to currents	☐	☐	☐
168 Nuclear magnetic resonance imaging	☐	☐	☐
27 Electromagnetic induction			
170 Laws of electromagnetic induction	☐	☐	☐
28 Alternating currents			
172 Characteristics of alternating currents	☐	☐	☐
174 The transformer	☐	☐	☐
175 Transmission of electrical energy	☐	☐	☐
176 Rectification	☐	☐	☐
29 Quantum physics			
179 Energy of a photon	☐	☐	☐

		Revised	Tested	Exam ready
181	Energy levels in atoms and line spectra	☐	☐	☐
183	Wave–particle duality	☐	☐	☐
185	Band theory	☐	☐	☐
187	Production and use of X-rays	☐	☐	☐
30 Particle and nuclear physics				
193	Mass defect and nuclear binding energy	☐	☐	☐
196	Radioactive decay	☐	☐	☐
A level experimental skills and investigations				
199	The examination questions	☐	☐	☐
200	How to get high marks in Paper 5	☐	☐	☐
204	**A level exam-style questions and answers**			

215 Now test yourself answers

Countdown to my exams

6–8 weeks to go

- Start by looking at the syllabus — make sure you know exactly what material you need to revise and the style of the examination. Use the revision planner on pages 4 and 5 to familiarise yourself with the topics.
- Organise your notes, making sure you have covered everything on the syllabus. The revision planner will help you to group your notes into topics.
- Work out a realistic revision plan that will allow you time for relaxation. Set aside days and times for all the subjects that you need to study, and stick to your timetable.
- Set yourself sensible targets. Break your revision down into focused sessions of around 40 minutes, divided by breaks. This Revision Guide organises the basic facts into short, memorable sections to make revising easier.

Revised ☐

2–5 weeks to go

- Read through the relevant sections of this book and refer to the expert tips, typical mistakes and key terms. Tick off the topics as you feel confident about them. Highlight those topics you find difficult and look at them again in detail.
- Test your understanding of each topic by working through the 'Now test yourself' questions in the book. Look up the answers at the back of the book.
- Make a note of any problem areas as you revise, and ask your teacher to go over these in class.
- Look at past papers. They are one of the best ways to revise and practise your exam skills. Write or prepare planned answers to the exam-style questions provided in this book. Check your answers with your teacher.
- Try different revision methods. For example, you can make notes using mind maps, spider diagrams or flash cards.
- Track your progress using the revision planner and give yourself a reward when you have achieved your target.

Revised ☐

1 week to go

- Try to fit in at least one more timed practice of an entire past paper and seek feedback from your teacher, comparing your work closely with the mark scheme.
- Check the revision planner to make sure you haven't missed out any topics. Brush up on any areas of difficulty by talking them over with a friend or getting help from your teacher.
- Attend any revision classes put on by your teacher. Remember, he or she is an expert at preparing people for examinations.

Revised ☐

The day before the examination

- Flick through this Revision Guide for useful reminders, for example the expert tips, typical mistakes and key terms.
- Check the time and place of your examination.
- Make sure you have everything you need — extra pens and pencils, a calculator, tissues, a watch, bottled water, sweets.
- Allow some time to relax and have an early night to ensure you are fresh and alert for the examinations.

Revised ☐

My exams

Paper 1

Date: ..... Time: .....

Location: .....

Paper 2

Date: ..... Time: .....

Location: .....

Paper 3

Date: ..... Time: .....

Location: .....

Paper 4

Date: ..... Time: .....

Location: .....

Paper 5

Date: ..... Time: .....

Location: .....

1 Physical quantities and units

SI units

Base quantities

Revised

All quantities in science consist of a number and a unit. **SI units** are based on the units of six SI **base quantities**:

- mass — kilogram (kg)
- length — metre (m)
- time — second (s)
- temperature — kelvin (K)
- electric current — ampere (A)
- amount of substance — mole (mol)

The mole is included for completeness. It is not a required unit for AS — only for A level. The mole is discussed in Topic 16, together with the Avogadro constant.

Although it is not formally an SI unit, the degree Celsius (°C) is often used as a measure of temperature.

Each of these units has a precise definition. You do not need to remember the details of these definitions.

SI units (Système International d'Unités) are carefully defined units that are used throughout the scientific world for measuring all quantities.

Base quantities are fundamental quantities whose units are used to derive all other units.

Derived units

Revised

The units of all other quantities are derived from the **base units**. For example, speed is found by dividing the distance travelled by the time taken. Therefore, the unit of speed is metres (m) divided by seconds (s). At O-level or IGCSE you will probably have written this unit as m/s. Now that you are taking your studies a stage further, you should write it as $m\,s^{-1}$.

Base units are the units of the base quantities.

Derived units are combinations of base units.

Worked example

The unit of force is the newton. What is this in base SI units?

Answer

The newton is defined from the equation:

force = mass × acceleration

unit of mass = kg

unit of acceleration = $m\,s^{-2}$

Insert into the defining equation:

units of newton = kg × m × s^{-2} or $kg\,m\,s^{-2}$

Expert tip

When a unit like watts is asked for in base units, take extra care.

watt = J/s

Change from this format to $J\,s^{-1}$; then substitute N m for J and continue as normal.

Homogeneity of equations

Revised

If you are not sure if an equation is correct, you can use the units of the different quantities to check it. The units on both sides of the equation must be the same.

Worked example

When a body falls in a vacuum, all its gravitational potential energy is converted into kinetic energy. By comparing units, show that the equation $mgh = ½mv^2$ is a possible solution to this equation.

Answer

Write down the units of the quantities on each side of the equation.

Left-hand side: unit of m = kg; unit of g = m s^{-2}; unit of h = m

Right-hand side: unit of ½ = none; unit of m = kg; unit of v = m s^{-1}

Compare the two sides:

units of mgh = kg × m s^{-2} × m = kg m^2 s^{-2}

units of $½mv^2$ = kg × (m s^{-1})^2 = kg m^2 s^{-2}

Both sides of the equation are identical.

Expert tip

There are lots of worked examples in this book. Try them before reading the answer and then compare your answer with the one supplied.

Using standard form

One way to deal with very large or very small quantities is to use standard form. Here, the numerical part of a quantity is written as a single digit followed by a decimal point, and as many digits after the decimal point as are justified; this is then multiplied by 10 to the required power.

Worked example

(a) The output from a power station is 5 600 000 000 W. Express this in watts, using standard form.

(b) The charge on an electron is 0.000 000 000 000 000 000 16 C. Express this in standard form.

Answer

(a) 5 600 000 000 W = 5.6×10^9 W

(b) 0.000 000 000 000 000 000 16 C = 1.6×10^{-19} C

'$\times 10^{-19}$' means that the number, in this case 1.6, is divided by 10^{19}.

Typical mistake

Mistakes are often made when dividing by numbers in standard form. If you are dividing by a quantity like 1.6×10^{-19}, remember that $1/10^{-x} = 10^{+x}$.

An added advantage of using standard form is that it also indicates the degree of precision to which a quantity is measured. This will be looked at in more detail in the section on practical skills.

Multiples and submultiples of base units

Revised

Sometimes, the base unit is either too large or too small. Prefixes are used to alter the size of the unit. Table 1.1 shows the prefixes that you need to know.

These are the recognised SI prefixes. The deci- (d) prefix is often used in measuring volume — decimetre cubed (dm^3) is particularly useful.

Expert tip

Remember that 1 dm^3 is $\frac{1}{1000}$ (not $\frac{1}{10}$) of 1 m^3. It is really (dm)^3. Hence it is $\frac{1}{10}$m × $\frac{1}{10}$m × $\frac{1}{10}$m.

Making estimates of physical quantities

There are a number of physical quantities where you should be aware of the rough values, for example the speed of sound in air (≈ 300 m s^{-1}). Lists of such values are given in appropriate parts of this guide — for example, Table 8.1 on page 52.

Table 1.1

Prefix	Symbol	Meaning	
pico	p	÷ 1 000 000 000 000	$\times 10^{-12}$
nano	n	÷ 1 000 000 000	$\times 10^{-9}$
micro	μ	÷ 1 000 000	$\times 10^{-6}$
milli	m	÷ 1 000	$\times 10^{-3}$
centi	c	÷ 100	$\times 10^{-2}$
deci	d	÷ 10	$\times 10^{-1}$
kilo	k	× 1 000	$\times 10^{3}$
mega	M	× 1 000 000	$\times 10^{6}$
giga	G	× 1 000 000 000	$\times 10^{9}$
tera	T	× 1 000 000 000 000	$\times 10^{12}$

Revision activity

- Make a copy of this table on a piece of card to refer to during the course.

Scalars and vectors

Scalar quantities and vector quantities

Revised

A **scalar quantity** has magnitude only. Examples are mass, volume and energy.

A **vector quantity** has magnitude and direction. Examples are force, velocity and acceleration.

When scalars are added, the total is simply the arithmetic total. For example, if there are two masses of 2.4 kg and 5.2 kg, the total mass is 7.6 kg.

When vectors are added, their directions must be taken into account. Two forces of 3 N and 5 N acting in the same direction would give a total force of 8 N. However, if they act in opposite directions the total force is (5 – 3) N = 2 N, in the direction of the 5 N force. If they act at any other angle to each other the **triangle of vectors** is used.

Constructing a vector diagram

In a vector diagram, each vector is represented by a line. The magnitude of the vector is represented by the length of the line and its direction by the direction of the line. If two vectors act at a point, their resultant can be found by drawing a vector triangle.

The following rules will help you to draw a triangle of vectors (Figure 1.1):

1. Choose a suitable scale. Draw a line to represent the first vector ($\boldsymbol{V_1}$) in both magnitude and direction. Draw a second line, starting from the tip of the first line, to represent the second vector ($\boldsymbol{V_2}$) in both magnitude and direction.
2. Draw a line from the beginning of the first vector to the end of the second line to complete a triangle.
3. The resultant vector is represented by the length of this line, and its direction.

Expert tip

The larger the scale you choose, the greater precision you should achieve in your answer. It is good practice to include your scale on the diagram. When measuring distances use a ruler, and when measuring angles use a protractor.

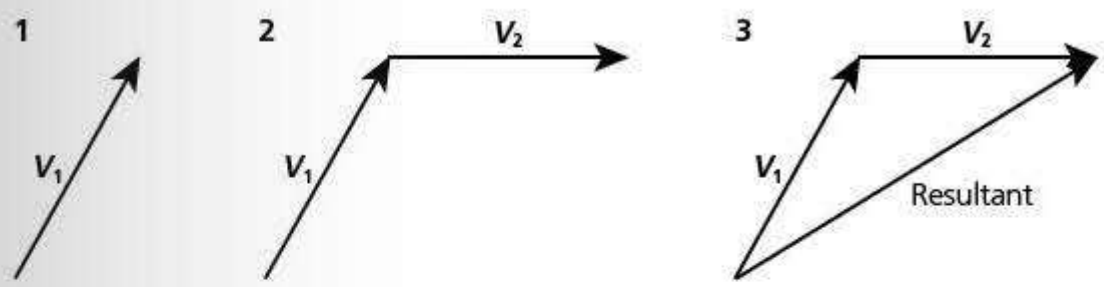

Figure 1.1 Drawing a triangle of vectors

Worked example

An aeroplane is flying with a velocity relative to the air of 200 km h^{-1} in a direction due north. There is a wind blowing from a direction of 30 degrees north of west at 80 km h^{-1} (Figure 1.2). Calculate the velocity of the aircraft relative to the ground.

Figure 1.2

Answer

Draw a vector diagram to a scale of 1.0 cm : 40 km h^{-1} (Figure 1.3).

length of the resultant = 4.35 cm

Multiply by the scaling:

velocity = 4.35 × 40 km h^{-1} = 174 km h^{-1}

Measure the angle θ, using a protractor:

θ = 23°, so the direction is 23° east of north.

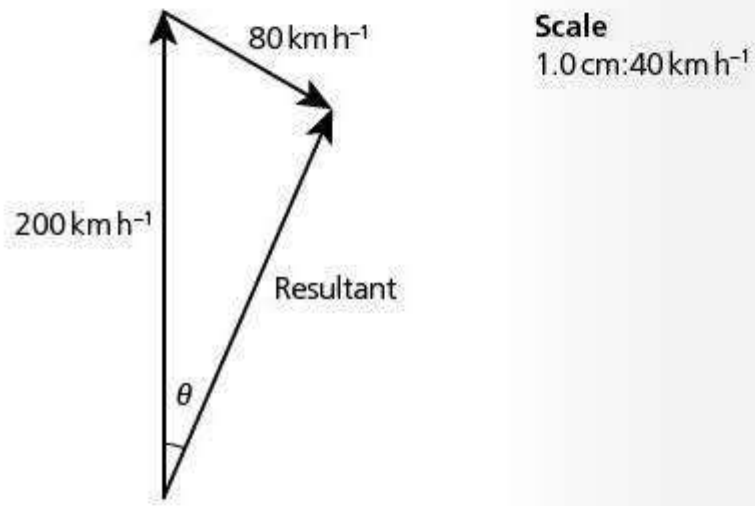

Figure 1.3

You will observe that the directions of the original vectors go round the triangle in the same direction (in this example clockwise). The direction of the resultant goes in the opposite direction (anticlockwise). If the original vectors had gone round the triangle in an anticlockwise direction, the resultant would have been clockwise.

Expert tip

If you tried to work out the answer to this worked example for yourself before looking at the one supplied, compare the layout of your answer with Figure 1.3. Is your layout clear? Can the examiner see what you have tried to do? This is most important in calculations, where some credit will be given even if an arithmetic error leads to your giving the wrong answer.

Resolving vectors

Revised

Just as it is useful to be able to combine vectors, it is also useful to be able to resolve vectors into components at right angles to each other.

Figure 1.4 shows a vector, $\boldsymbol{V}$, acting at an angle θ to the horizontal.

Figure 1.4

The triangle of vectors in Figure 1.4(a) shows that this vector can be considered to be made up from a vertical component ($\boldsymbol{V}_v$) and a horizontal component ($\boldsymbol{V}_h$). It is sometimes easier to use a diagram similar to Figure 1.4(b) when resolving vectors — this emphasises that the vectors are acting at the same point.

By inspection you can see that $\cos\theta = \boldsymbol{V}_h/\boldsymbol{V}$. Therefore:

$$\boldsymbol{V}_h = \boldsymbol{V}\cos\theta \text{ and } \boldsymbol{V}_v = \boldsymbol{V}\sin\theta$$

Worked example

A box of weight 20 N lies at rest on a slope, which is at 30° to the horizontal. Calculate the frictional force on the box up the slope.

Answer

Resolve the weight (20 N) into components parallel to and perpendicular to the slope (Figure 1.5).

The frictional force, ***F***, is equal to the component of the weight down the slope:

$F = 20 \sin 30 = 10\ \text{N}$

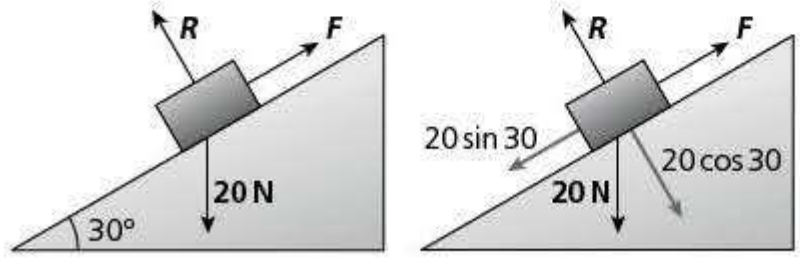

Figure 1.5

Now test yourself

Tested

1 Which of the following are base quantities? time, speed, volume, energy

2 Which of the following are base units? kilogram, metre squared, joule, kelvin

3 The unit of potential difference is the volt. Give this in base units.

4 The pressure exerted beneath the surface of a liquid is given by the equation:

$$p = h\rho g$$

where p is pressure, h is depth below the surface, ρ is density of the liquid and g is the acceleration due to gravity. Show that the equation is homogeneous.

5 Calculate the number of micrograms in a kilogram. Give your answer in standard form.

6 Use standard form to show how many metres there are in a nanometer.

Answers on p.215

2 Measurement techniques

Measurements

Physics is a science of measurement so you will need to develop the ability to use a variety of different instruments. Below is a list of instruments and techniques that you should to be able to use. You will have used most of these during the course and this book refers to them where relevant. Nevertheless, it would be a good idea to copy the list and, once you feel confident that you can use the instrument proficiently, tick it off.

You should be able to use:

- a ruler, vernier scale and micrometer to measure length
- a top pan balance and a spring balance to measure weight
- a protractor to measure angles
- a clock and stopwatch to measure time intervals
- a cathode-ray oscilloscope to measure potential difference
- a cathode-ray oscilloscope with a calibrated time base to measure time intervals and frequencies
- a thermometer to measure temperature
- an ammeter to measure current
- a voltmeter to measure potential difference
- a galvanometer in null methods

Vernier calipers

Revised

Rulers can measure to the nearest millimetre. Vernier calipers measure to the nearest $\frac{1}{10}$ of a millimetre. To read an instrument with a vernier scale (Figure 2.1):

1. Read the millimetres from the main scale marking, which is just before the zero on the vernier.
2. Take the next figure (tenths of a millimetre) from the first vernier mark to coincide with a main scale mark.

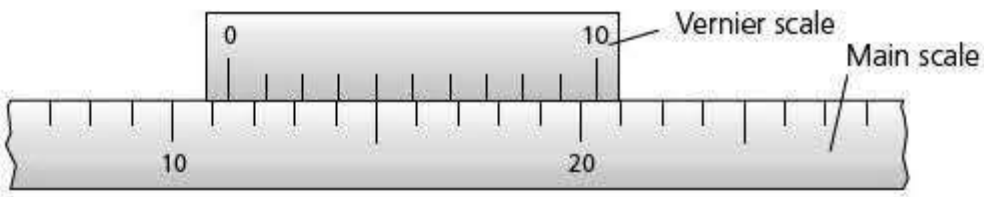

Figure 2.1 Vernier scale

Worked example

What is the reading on the instrument shown in Figure 2.1?

Answer

main scale reading = 11 mm

vernier reading = 0.4 mm

Calculate the final reading by adding the two readings.

final reading = 11.4 mm

Micrometer scales

Revised

Vernier scales can be used to measure to the nearest $\frac{1}{10}$ of a millimetre.

Micrometers can measure to the nearest $\frac{1}{100}$ of a millimetre.

Micrometers have an accurately turned screw thread (Figure 2.2). When the thimble is turned through one revolution, the jaws are opened (or closed) by a predetermined amount. With most micrometers this is 0.50 mm. There will be 50 divisions on the thimble, so turning it through one division closes, or opens, the jaws by 0.50 mm divided by 50 = 0.01 mm.

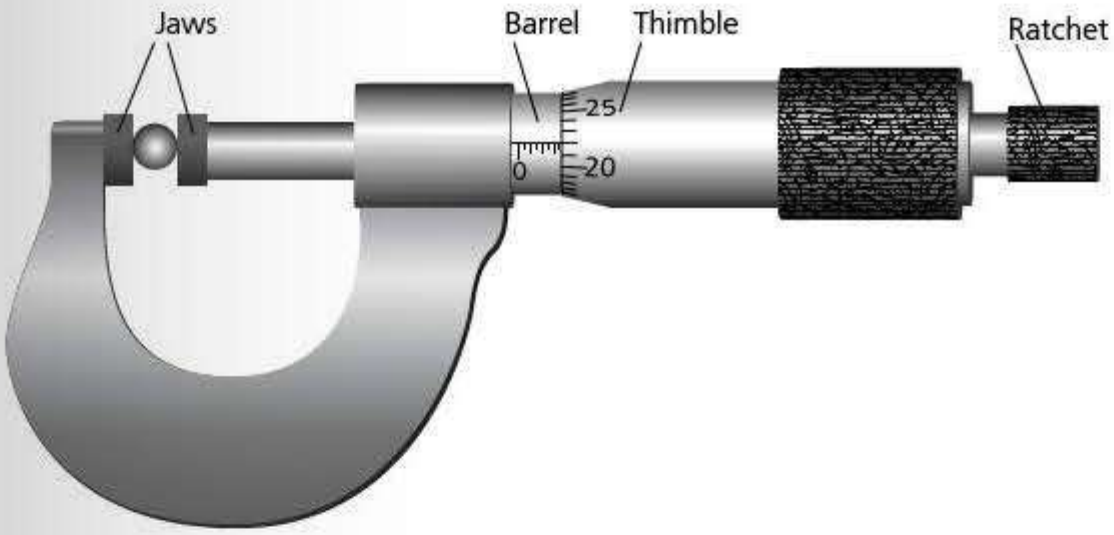

Figure 2.2 A micrometer screw gauge

To measure the diameter or thickness of an object the jaws are closed, using the ratchet, until they just apply pressure on the object.

To read the micrometer:

1. Take the reading of the millimetres and half millimetres from the barrel.
2. Take the reading from the thimble.
3. Add the readings together.

Worked example

What is the reading on the micrometer in Figure 2.2?

Answer

reading on the barrel = 3.5 mm

reading on the thimble = 0.22 mm

Calculate the final reading by adding the two readings.

final reading = 3.72 mm

Typical mistake

The 0.5 is often missed, so the worked example answer would be given as 3.22 mm. Some careless students might add the '22' to the 3.5 to give an answer of 3.522 mm.

Revision activity

- Trace the diagram of the scale and vernier. Cut them apart, then slide the vernier along the main scale and practise taking readings.

Cathode-ray oscilloscope

Revised

A cathode-ray oscilloscope (c.r.o.) can be used to measure both the amplitude of signals and short time intervals. A potential difference applied to the *y*-input controls the movement of the trace in a vertical direction. A potential difference applied across the *x*-input controls the trace in the horizontal direction.

Measurement of potential difference

The *y*-sensitivity is adjustable and is measured in volts per cm ($V\,cm^{-1}$) or volts per division ($V\,div^{-1}$).

In the example in Figure 2.3 the *y*-sensitivity is set at $2\,V\,div^{-1}$. A d.c. supply is applied across the *y*-input. No voltage is applied across the *x*-input. The trace appears as a bright spot.

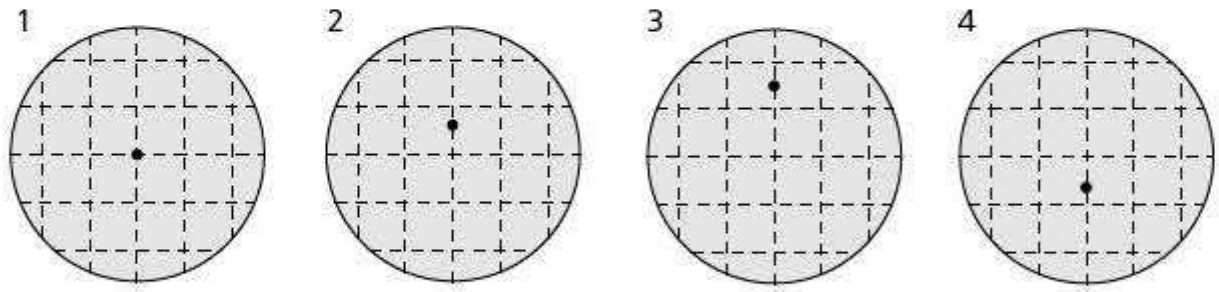

Figure 2.3 Using a cathode-ray oscilloscope to measure potential difference

In Figure 2.3:

- Screen 1 shows the cathode-ray oscilloscope with no input.
- Screen 2 shows a deflection of 0.75 of a division. The voltage input across the *y*-plates is $0.75 \times 2 = 1.5\,V$.
- Screen 3 shows a deflection of 1.5 divisions. The voltage input across the *y*-plates is $1.5 \times 2 = 3.0\,V$.
- Screen 4 shows a deflection of −0.75 divisions. The voltage input across the *y*-plates is $-0.75 \times 2 = -1.5\,V$, in other words 1.5 V in the opposite direction.

Measurement of time intervals

To measure time intervals, a time-base voltage is applied across the *x*-input (Figure 2.4). This drags the spot across the screen, before flying back to the beginning again. The rate at which the time-base voltage drags the spot across the screen can be measured either in seconds per division ($s\,div^{-1}$) or divisions per second ($div\,s^{-1}$). You *must* check which method has been used.

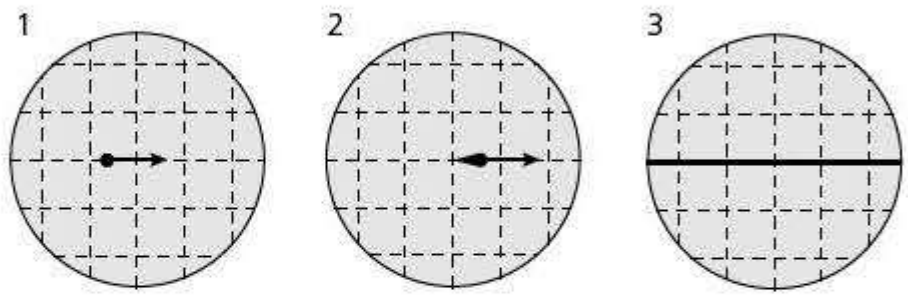

Figure 2.4 Application of a time-base voltage across the *x*-input of a cathode-ray oscilloscope

In Figure 2.4:

- Screen 1 — the spot moves slowly across the screen before flying back to the beginning and repeating the process.
- Screen 2 — with a higher frequency time base, the spot moves across the screen more quickly. The fluorescence on the screen lasts long enough for a short tail to be formed.
- Screen 3 — with a much higher frequency, the fluorescence lasts long enough for the spot to appear as a continuous line.

If successive pulses are applied to the *y*-plate while the time base voltage is applied, the trace might appear as in Figure 2.5. The time interval between the pulses can be calculated by multiplying the number of divisions between the two pulses by the time base.

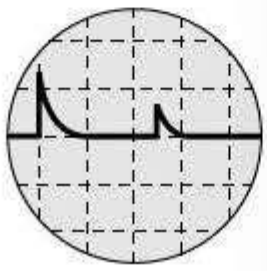

Figure 2.5 Using a cathode-ray oscilloscope to measure time intervals

Worked example

A survey ship sends a pulse of sound down to the seabed and the echo is detected. The two pulses are shown in Figure 2.5 with the cathode-ray oscilloscope time base being set at $50\,ms\,div^{-1}$. Calculate the depth of the sea, given that the speed of sound in water is $1500\,m\,s^{-1}$. →

Answer

time interval between pulses = number of divisions × time base = 2.5 × 50 = 125 ms = 0.125 s.

$$\text{speed} = \frac{\text{distance}}{\text{time}}$$

Therefore:

distance = speed × time = 1500 × 0.125 = 187.5 m

$$\text{depth of the water} = \frac{187.5}{2} \approx 94\,\text{m}$$

Calibration curves

Revised

You might use sensors whose output is not proportional to the quantity you are attempting to measure. A good example is the output from a thermocouple thermometer, which you will have met in your pre-AS course. The worked example below shows how you can use a calibration curve when using this type of instrument.

Worked example

Figure 2.6 shows the calibration curve for a thermocouple used to measure temperatures from 0 to 250°C. Deduce the temperature when the thermocouple produces an e.m.f. of 0.250 mV.

Answer

Draw a horizontal line from 0.250 mV on the *y*-axis to the curve.

Draw a vertical line from where this line intersects with the curve to cut the *x*-axis.

This intersects at 235 °C, hence the required temperature is 235 °C.

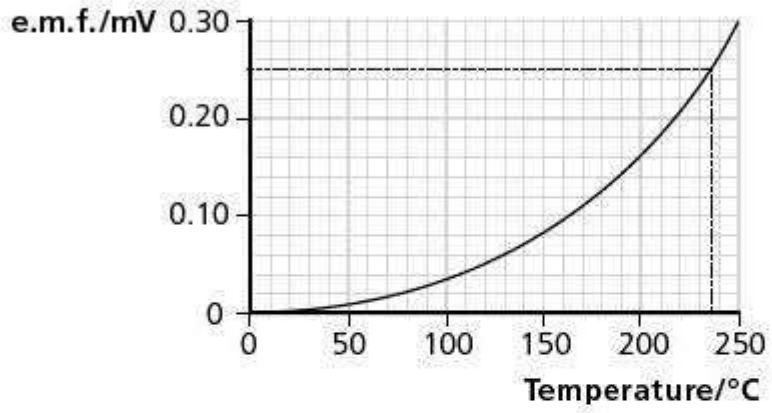

Figure 2.6

Errors and uncertainties

Errors

Revised

An **error** is a mistake in taking a reading. Errors and repeated readings are discussed in detail on pages 82–83.

Accuracy, precision and uncertainty

Revised

Accuracy and **precision** are terms that often cause confusion.

Consider a rod of 'true' diameter 52.8012 mm. Suppose that you use a ruler and measure it to be 53 mm. This is accurate but it is not very precise. If your friend uses a micrometer screw gauge and measures it as 52.81 mm this is more precise, even though the final figure is not totally accurate.

No measurement can be made to absolute precision — there is always some **uncertainty**.

If a result is recorded as 84.5 s, this implies that there is an uncertainty of at least 0.1 s, perhaps more. You might see such a reading written as 84.5 ± 0.2 s. The 0.2 s in this reading is called the **absolute uncertainty**.

Accuracy is how close to the 'real value' a measurement is.

Precision is that part of accuracy that the experimenter controls by the choice of measuring instrument and the skill with which it is used.

Uncertainty is the range of values in which a measurement can fall.

It is often convenient to express an uncertainty as a percentage of the reading. This is known as the **percentage uncertainty**.

$$\text{percentage uncertainty} = \frac{\text{absolute uncertainty}}{\text{reading}} \times 100\%$$

The percentage uncertainty in the previous example is:

$$\frac{0.2}{84.5} \times 100\% = 0.24\%$$

Precision of measurement

Revised

When making a static measurement (for example, the length of a pendulum) you should normally measure to the nearest division on the instrument. The exception to this is if the divisions are one millimetre or more apart. In this case, you need to judge to the nearest half division or better. When making a dynamic measure (for example, the height to which a ball bounces), other considerations come into play — the ball is moving, so you have to judge when it is at its maximum height. This is a much more difficult task. You can probably measure only to the nearest 5 millimetres.

Many digital stopwatches measure to 1/100 of a second. However, the uncertainties in the reaction times of manually starting and stopping a stopwatch are much greater than this. The best you can manage is to measure to the nearest 1/10 of a second. Until 1977, world records for running events were given to only this precision. It was only with the advent of electronic timing that it became possible to record them to 1/100 of a second. The current world record for the men's 100 m is 9.58 s. This suggests an absolute uncertainty of ±0.01 s, a percentage uncertainty of approximately 0.1%. This has the knock-on effect that for the world record to be valid the track must also be measured to a precision of 0.1% or better. This means an absolute uncertainty of 10 cm.

The precision can also be estimated from taking repeat readings. If five readings of the time taken for a ball to run down a track are taken, it is acceptable to give the uncertainty as half the range of the readings. For example if the readings were: 5.2 s, 5.2 s, 5.4 s, 5.0 s, 5.1 s. The range is the difference between the largest and smallest values (5.4 − 5.0 = 0.4 s), so the uncertainty is ±0.4s/2 = ±0.2 s.

Now test yourself

Tested

1 What is the reading on the vernier scale in Figure 2.7?
2 What is the reading on the micrometer in Figure 2.8?
3 If the time base in Figure 2.5 is given as 5 μs div^{-1}, deduce the time between the pulses.
4 In Figure 2.6, deduce the reading on the voltmeter when the temperature is 100°C.

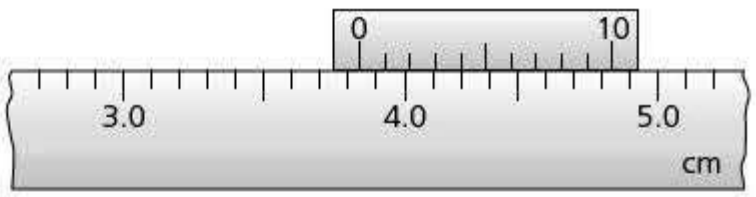

Figure 2.7

Figure 2.8

Answers on p.215

3 Kinematics

Equations of motion

Definitions of quantities

Revised

You should know the definitions of the terms **distance**, **displacement**, **speed**, **velocity** and **acceleration**.

- Distance is a scalar quantity. It has magnitude only.
- Displacement is a vector quantity. It has both magnitude and direction.
- Speed is a scalar quantity. It refers to the total distance travelled.
- Velocity is a vector quantity, being derived from displacement — not the total distance travelled.
- Acceleration is a vector quantity. Acceleration in the direction in which a body is travelling will increase its velocity. Acceleration in the opposite direction from which a body is travelling will decrease its velocity. Acceleration at an angle of 90° to the direction a body is travelling in will change the direction of the velocity but will not change the magnitude of the velocity.

Distance is the length between two points measured along the straight line joining the two points.

Displacement is the distance of an object from a fixed reference point in a specified direction.

Speed is the distance travelled per unit time.

Velocity is the change in displacement per unit time.

Acceleration is the rate of change of velocity.

Equations linking the quantities

Revised

$$v = \frac{\Delta s}{\Delta t}$$

where v is the velocity and Δs is the change of displacement in time Δt.

$$a = \frac{\Delta v}{\Delta t}$$

where a is the acceleration and Δv is the change in velocity in time Δt.

Expert tip

In general, the symbol Δ means 'change', so Δs is the change in displacement and Δt is the change in time.

Units

Speed and velocity are measured in metres per second ($m\,s^{-1}$).

Acceleration is the change in velocity per unit time. Velocity is measured in metres per second ($m\,s^{-1}$) and time is measured in seconds (s), which means that the acceleration is measured in metres per second every second ($m\,s^{-1}$ per s) which is written as $m\,s^{-2}$.

Worked example

A toy train travels round one circuit of a circular track of circumference 2.4 m in 4.8 s. Calculate:

(a) the average speed

(b) the average velocity

Answer

(a) x is the distance travelled, so average speed $= \frac{\Delta x}{\Delta t} = \frac{2.4\ (m)}{4.8\ (s)} = 0.50\,m\,s^{-1}$

(b) s is the displacement, which after one lap is zero. The train finishes at the same point at which it started. Hence:

average velocity $= \frac{\Delta s}{\Delta t} = \frac{0\ (m)}{4.8\ (s)}$ and $v = 0\,m\,s^{-1}$

Expert tip

It is good practice to include units in your calculations, as shown in this example — it can help to avoid mistakes with multiples of units. It can also help you to see if an equation does not balance. In this book, in order to make the equations clear, units are only included in the final quantity.

Worked example

A car travels 840 m along a straight level track at constant speed of 35 m s^{-1}. The driver then applies the brakes and the car decelerates to rest at a constant rate in a further 7.0 s. Calculate:

(a) the time for which the car is travelling at constant speed

(b) the acceleration of the car when the brakes are applied

Answer

(a) $v = \frac{\Delta s}{\Delta t}$ $\quad 35 = \frac{840}{\Delta t}$ $\quad \Delta t = \frac{840}{35}$

$\Delta t = 24\,\text{s}$

(b) $a = \frac{\Delta v}{\Delta t} = \frac{0 - 35}{7.0}$

$\Delta v = -5.0\,\text{m s}^{-2}$

Expert tip

The minus sign shows that the velocity decreases rather than increases. It is also worth noting that the given quantities in the question are to two significant figures. Therefore, the answer should also be recorded to two significant figures.

Graphs

Revised

Graphs give a visual representation of the manner in which one variable changes with another. Looking at motion graphs can help us to see what is happening over a period of time.

Displacement–time graphs

Figure 3.1 shows the displacement of a body that increases uniformly with time. This shows constant velocity. The magnitude of the velocity is equal to the gradient of the graph.

$$v = \text{gradient} = \frac{\Delta s}{\Delta t}$$

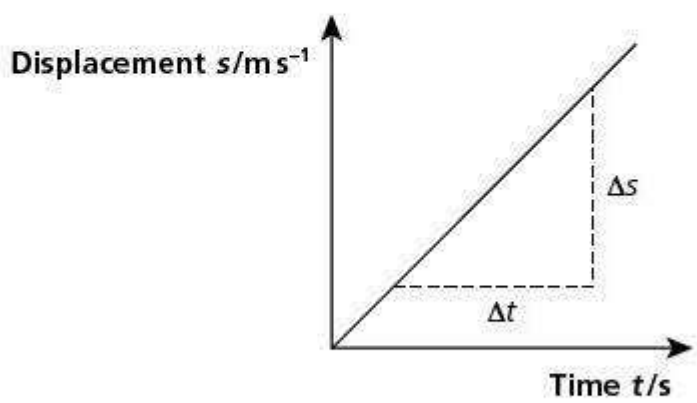

Figure 3.1 Displacement–time graph for constant velocity

Expert tip

When you measure the gradient of a graph, use as much of the graph as possible. This will reduce the percentage error in your calculation.

Figure 3.2 shows an example of a body's velocity steadily increasing with time. To find the velocity at a particular instant (the instantaneous velocity), draw a tangent to the graph at the relevant point and calculate the gradient of that tangent.

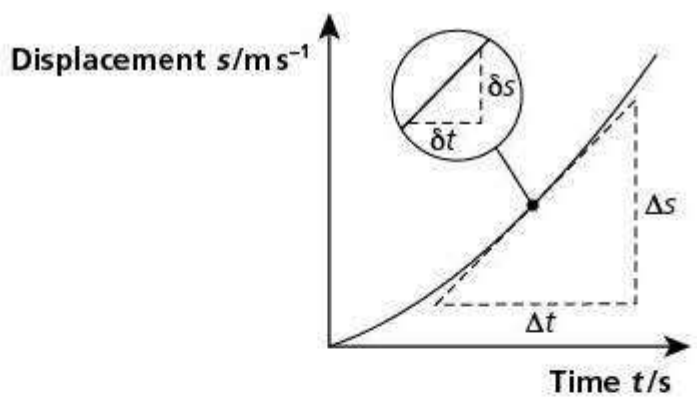

Figure 3.2 Displacement–time graph for increasing velocity

Velocity–time graphs

Figure 3.3(a) shows a body moving with a constant velocity; Figure 3.3(b) shows that the velocity of the body is increasing at a constant rate — it has constant **acceleration**.

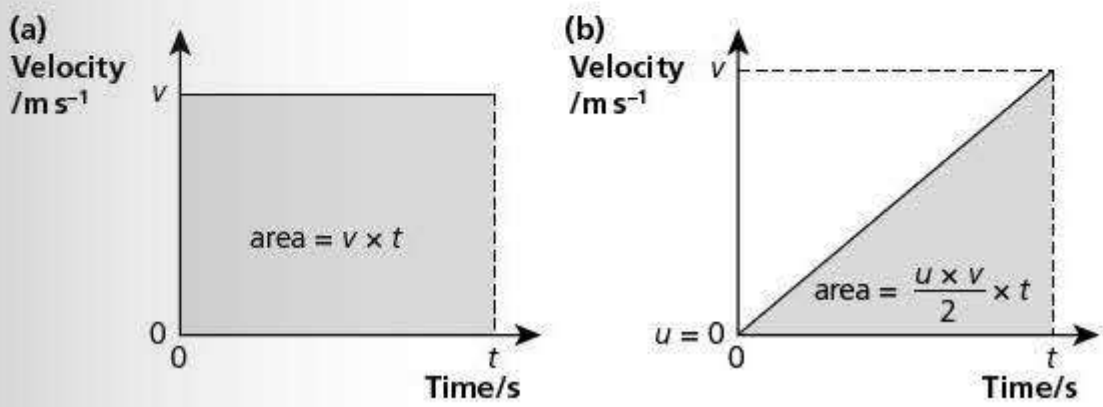

Figure 3.3 Velocity–time graphs: (a) constant velocity, (b) velocity increasing at constant rate

The gradient of a velocity–time graph is the change in velocity divided by the time taken. It is equal to the magnitude of the acceleration.

$$a = \frac{v - u}{t_2 - t_1} = \frac{\Delta v}{\Delta t}$$

Displacement from a velocity–time graph

The displacement is equal to the area under a velocity–time graph. This can be clearly seen in Figure 3.3(a). The shaded area is a rectangle and its area is equal to:

height × length = velocity × time

Figure 3.3(b) shows changing velocity; the distance travelled is the average velocity multiplied by the time. For constant acceleration from zero velocity this is half the maximum velocity multiplied by the time — the area of a triangle.

Worked example

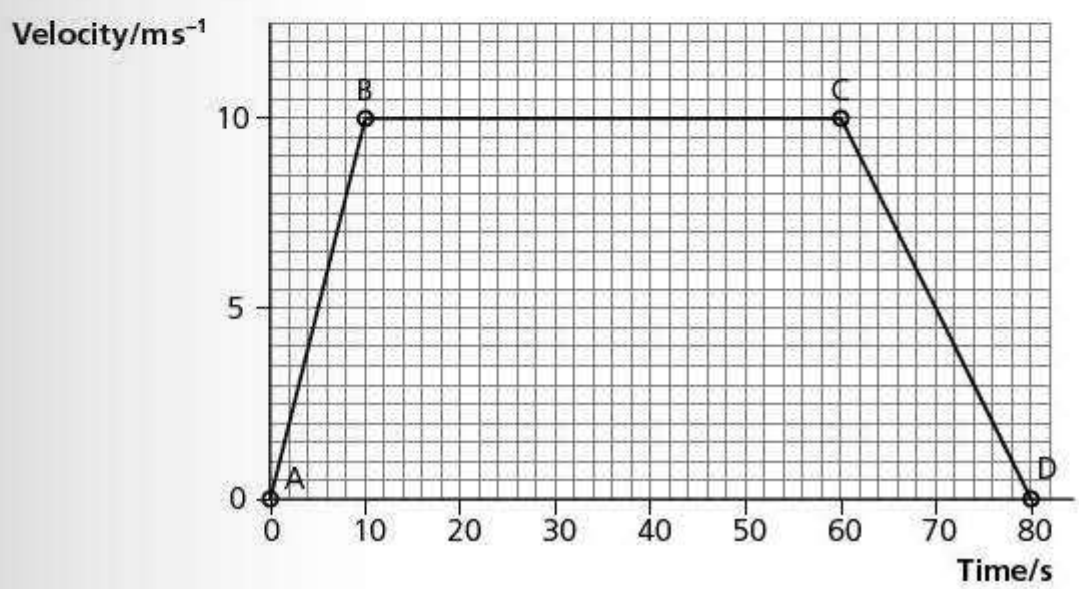

Figure 3.4

Figure 3.4 shows the motion of a cyclist as she travels from one stage to the next in a race. Calculate:

(a) the acceleration from A to B

(b) the maximum speed of the cyclist

(c) the total distance the cyclist travels

(d) the acceleration from C to D

Answer

(a) acceleration = gradient = $\frac{10 - 0}{10 - 0} = 1.0\,\text{m s}^{-2}$

(b) The maximum speed can be read directly from the graph. It is $10\,\text{m s}^{-1}$.

(c) distance travelled = area under the graph

$= (\frac{1}{2} \times 10 \times 10) + (10 \times 50) + (\frac{1}{2} \times 10 \times 20) = 650\,\text{m}$

(d) acceleration = gradient = $\frac{0 - 10}{80 - 60} = -0.5\,\text{m s}^{-2}$

Deriving equations of uniformly accelerated motion

Revised

Figure 3.5 shows the motion of a body that has accelerated at a uniform rate, from an initial velocity u to a final velocity v in time t.

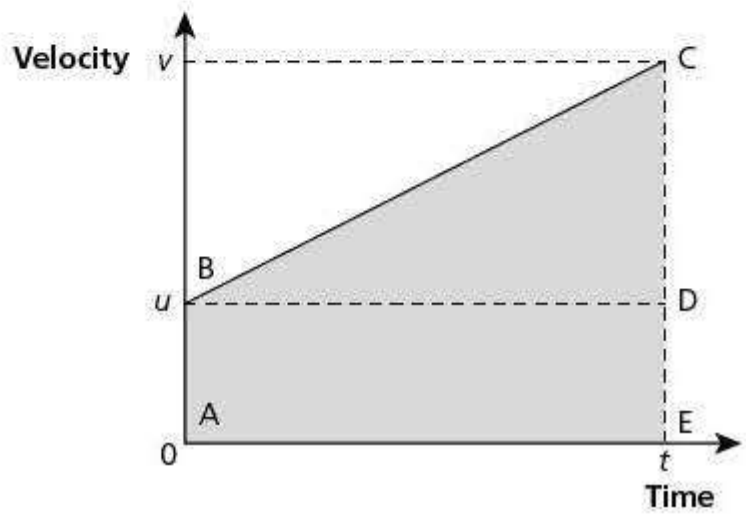

Figure 3.5

Equation 1

The acceleration of the body:

$$a = \frac{v - u}{t}$$

Rearranging this equation gives:

$$v = u + at$$

Equation 2

The distance s travelled by the body can be calculated in two ways. First:

$$s = \text{average velocity} \times \text{time}$$

$$s = \frac{v + u}{2}t$$

Equation 3

Second, the distance travelled is equivalent to the area under the graph:

$$s = \text{area of rectangle ABDE} + \text{area of triangle BCD}$$

$$s = ut + \tfrac{1}{2}(v - u)t$$

$$\frac{v - u}{t} = a$$

Therefore,

$$s = ut + \tfrac{1}{2}at^2$$

Equation 4

A fourth equation is needed to solve problems in which the time and one other variable are not known.

Equation 1 rearranges to:

$$t = \frac{v - u}{a}$$

Substitute this in Equation 2:

$$s = \frac{v + u}{2} \times \frac{v - u}{a}$$

$$s = \frac{v^2 - u^2}{2a}$$

Rearranging gives:

$$v^2 = u^2 + 2as$$

Summary

The equations of uniformly accelerated motion are:

- $v = u + at$
- $s = ut + \frac{1}{2}at^2$
- $s = \frac{v + u}{2}t$
- $v^2 = u^2 + 2as$

Expert tip

These equations of motion can only be used if there is constant acceleration (including constant deceleration and zero acceleration) for the whole part of the journey that is being considered.

Using the equations of uniformly accelerated motion

Revised

A common type of problem you might be asked to analyse is the journey of a vehicle between two fixed points.

Worked example

During the testing of a car, it is timed over a measured kilometre. In one test it enters the timing zone at a velocity of $50\,\text{m s}^{-1}$ and decelerates at a constant rate of $0.80\,\text{m s}^{-2}$. Calculate:

(a) the velocity of the car as it leaves the measured kilometre

(b) the time it takes to cover the measured kilometre

Answer

(a) $u = 50\,\text{m s}^{-1}$

$s = 1.0\,\text{km} = 1000\,\text{m}$

$a = -0.80\,\text{m s}^{-2}$

$v = ?$

Required equation:

$v^2 = u^2 + 2as$

Substitute the relevant values and solve the equation:

$v^2 = 50^2 + 2 \times (-0.80) \times 1000 = 2500 - 1600 = 900$

$v = 30\,\text{m s}^{-1}$

(b) Required equation:

$v = u + at$

Substitute in the relevant variables:

$30 = 50 - (0.80 \times t)$

$t = \frac{50 - 30}{0.8} = 25\,\text{s}$

Expert tip

It might seem tedious writing out all the quantities you know and the equation you are going to use. However, this will mean that you are less likely to make a careless error and, if you do make an arithmetic error, it helps the examiner to see where you have gone wrong, so that some marks can be awarded.

Typical mistake

Two common mistakes in this type of question are:

- forgetting that deceleration is a negative acceleration
- forgetting to convert kilometres to metres

Analysing the motion of a body in a uniform gravitational field

The equations of uniformly accelerated motion can be used to analyse the motion of a body moving vertically under the influence of gravity. In this type of example it is important to call one direction positive and the other negative and to be consistent throughout your calculation. The next example demonstrates this.

Worked example

A boy throws a stone vertically up into the air with a velocity of $6.0\,\text{m s}^{-1}$. The stone reaches a maximum height and falls into the sea, which is 12 m below the point of release (Figure 3.6). Calculate the velocity at which the stone hits the water surface. (acceleration due to gravity = $9.8\,\text{m s}^{-2}$)

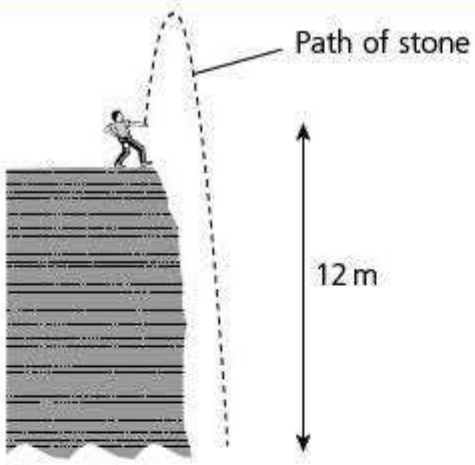

Figure 3.6.

Answer

$u = 6.0\,\text{m s}^{-1}$

$a = -9.8\,\text{m s}^{-2}$

$s = -12\,\text{m}$

$v = ?$

Required equation:

$v^2 = u^2 + 2as$

$v^2 = 6.0^2 + [2 \times (-9.8) \times (-12)] = 36 + 235 = 271$

$v = \pm 16.5\,\text{m s}^{-2}$

In this example, upwards has been chosen as the positive direction; hence u is $+6.0\,\text{m s}^{-1}$. Consequently, the distance of the sea below the point of release (12 m) and the acceleration due to gravity ($10\,\text{m s}^{-2}$) are considered negative because they are both in the downward direction.

The final velocity of the stone is also in the downward direction. Therefore, it should be recorded as $-16.5\,\text{m s}^{-2}$.

It is also worth noting that air resistance on a stone moving at these speeds is negligible.

Mass and weight

Mass and **weight** are often confused. Weight is the gravitational pull on a body and depends on the strength of the gravitational field at the position of the body. Mass is a property of a body itself, and does not vary with the position of the body.

In general, the two are connected by the equation:

$$W = mg$$

where W is weight, m is mass and g is the gravitational field strength (or acceleration of free fall).

The gravitational field strength near the surface of the Earth is $9.8\,\text{N kg}^{-1}$. Therefore, a mass of about 100 g (0.1 kg) has a weight of just less than 1 N (0.98 N) on the Earth's surface. Its weight on the Moon is only 0.16 N because the gravitational field strength on the Moon is only about ⅙ of that on Earth.

Mass is the total amount of matter in a body. Mass is a base quantity and the base unit is the kilogram (kg).

Weight is the gravitational pull on a body. Weight is a type of force and like all forces its unit is the newton (N).

Acceleration of free fall

Revised

In the absence of air resistance, all bodies near the Earth fall with the same acceleration. This is known as the acceleration of free fall. Similarly, bodies near any other planet will fall with equal accelerations. However, these accelerations will be different from those near the Earth. This is explored further in Topic 4 (Dynamics).

Measurement of the acceleration of free fall

Figure 3.7 shows apparatus that can be used to measure the acceleration of free fall.

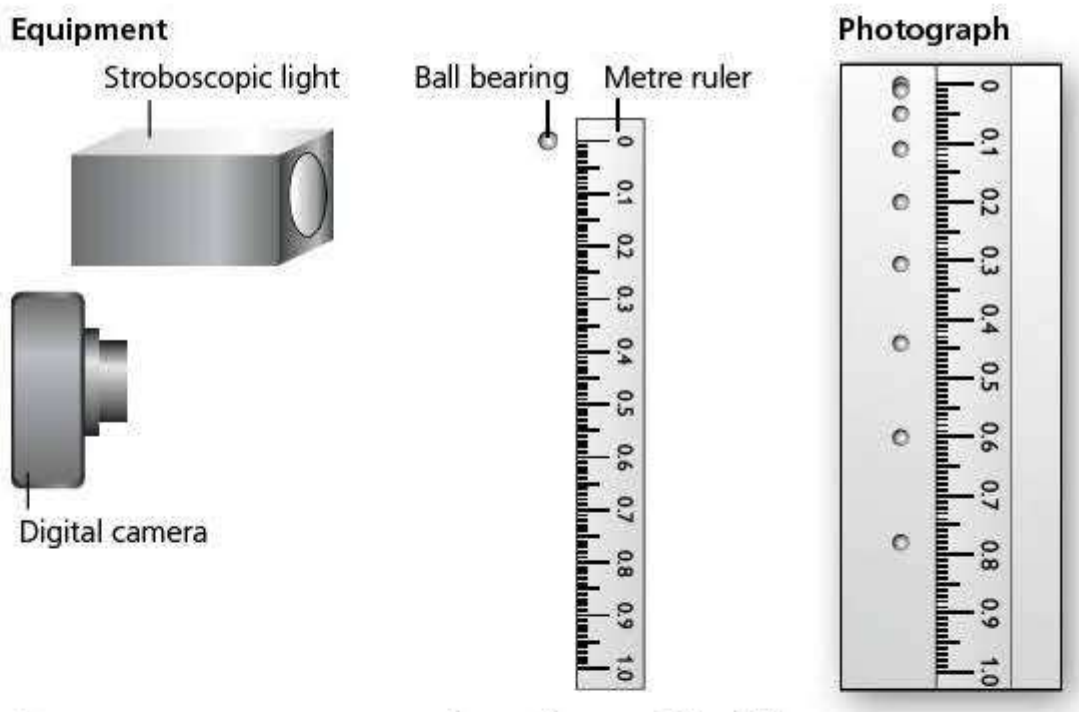

Figure 3.7 Apparatus to measure the acceleration of free fall

The stroboscopic light flashes at a fixed frequency and the shutter of the camera is held open. This results in a photograph that shows the position of the ball in successive time intervals, as in Figure 3.7. In this example the stroboscopic light was set to flash at 20 Hz. In Table 3.1, the third column shows the distance travelled by the ball in each time interval and the fourth column shows the average speed during each interval.

Table 3.1

Time/s	Position/m	Distance travelled/m	Speed/m s^{-1}
0.00	0.00	0.00	0.0
0.05	0.01	0.01	0.2
0.10	0.05	0.04	0.8
0.15	0.11	0.06	1.2
0.20	0.20	0.09	1.8
0.25	0.30	0.11	2.2
0.30	0.44	0.14	2.8
0.35	0.60	0.16	3.2
0.40	0.78	0.18	3.6

A graph of the speed against time is plotted (Figure 3.8). The acceleration of the ball is equal to the gradient of this graph.

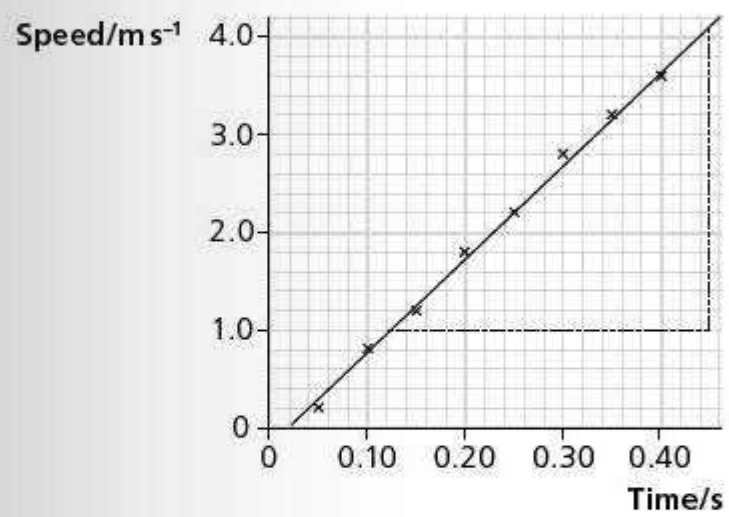

Figure 3.8

Readings from Figure 3.8: (0.45, 4.1) and (0.13, 1.0)

$$a = \frac{4.1 - 1.0}{0.45 - 0.125} = 9.5\,\text{m s}^{-1}$$

Effect of air resistance

When you kick a football or hit a tennis ball you will be aware of the effect of air resistance. Air resistance affects all moving bodies near the Earth's surface, including the motion of falling bodies. Air resistance depends on the shape of a body and also on the speed at which the body travels. The resistance on a streamlined body is lower than on a less streamlined body. Car manufacturers spend a lot of time and money researching the best shape for a car so as to reduce air resistance.

Air resistance, or drag, increases as the velocity of a body increases. As a falling body accelerates, the drag force increases. Therefore, the resultant force on it will decrease, meaning that the acceleration decreases. When the drag force is equal to the gravitational pull on the body it will no longer accelerate, but fall with a constant velocity. This velocity is called the **terminal velocity**.

Figure 3.9 shows how the velocities of a shuttlecock and of a tennis ball change as they fall from rest.

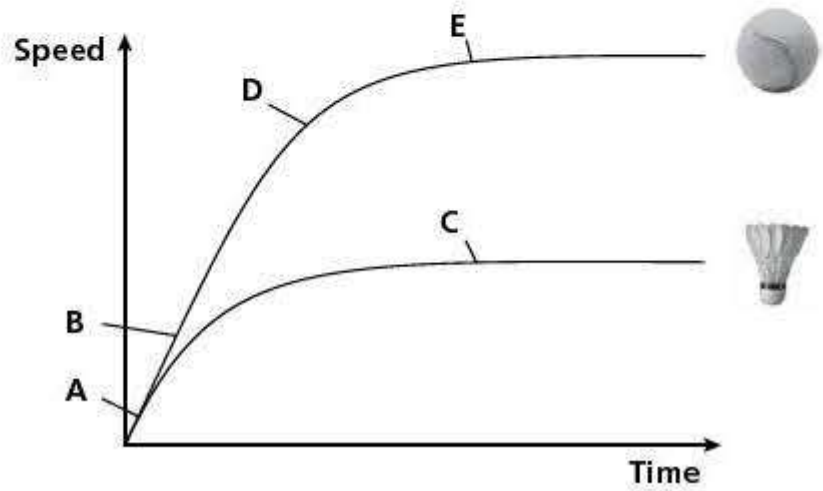

Figure 3.9

- At **point A** the air resistance (or drag force) is negligible and both the shuttlecock and the tennis ball fall with the same acceleration, *g*.
- At **point B** the air resistance (compared with the weight of the ball) remains small and it continues to fall with the same acceleration; the shuttlecock has a much smaller weight than the ball and the air resistance on it is significant compared with its weight, so its acceleration is reduced.
- At **point C** the air resistance is equal to the weight of the shuttlecock. It no longer accelerates and falls with its terminal velocity.
- At **point D** the air resistance on the ball is now significant and its acceleration is reduced.
- At **point E** the air resistance is equal to the weight of the ball and it falls with its terminal velocity.

Revision activity

You should be able to develop many equations from more fundamental equations. Some of these fundamental equations are given at the beginning of the exam paper; others you must learn by heart. It is a good idea to write out these equations on a piece of card and stick the card on your bedroom mirror to help learn them by heart. In this chapter the 'must-learn' equations are:

- $v = \frac{\Delta s}{\Delta t}$
- $a = \frac{\Delta v}{\Delta t}$
- $W = mg$

The others are either on the list on pages 66–67 of the syllabus or you should be able to derive them.

Now test yourself

Tested

1 Describe one similarity and one difference between speed and velocity.

2 A car travelling at $15\,\text{m}\,\text{s}^{-1}$ applies its brakes and comes to rest after 4.0 s. Calculate the acceleration of the car.

3 An astronaut on the Moon drops a hammer from a height of 1.2 m. The hammer strikes the ground 1.2 s after being released. Calculate the acceleration due to gravity on the Moon.

4 A bullet of mass 50 g is fired horizontally from a height of 1.2 m. The bullet leaves the gun at a speed of $280\,\text{m}\,\text{s}^{-1}$.

a Describe the path the bullet takes.

b Assume the ground is level. Calculate:

i the time that it takes for the bullet to hit the ground

ii the distance the distance the bullet travels before it hits the ground

iii State any assumptions you made in i and ii and explain the effect they will have on your answer to ii.

Answers on p.215

4 Dynamics

Momentum and Newton's laws of motion

Momentum

Revised

Newton's laws are the basis on which classical mechanics was built. Many of the ideas are seen as self-evident today but were revolutionary when Newton first developed his ideas.

Before discussing Newton's laws of motion in detail you need to understand the concept of **momentum**.

Linear momentum (p) is defined as the product of mass and velocity:

$$p = mv$$

The unit of momentum is $kg\,m\,s^{-1}$. It is formed by multiplying a vector by a scalar and is, therefore, a vector itself. This means, for example, that a body of mass 2 kg travelling at $3\,m\,s^{-1}$ has a momentum of $6\,kg\,m\,s^{-1}$. A body of the same mass travelling at the same speed but in the opposite direction has a momentum of $-6\,kg\,m\,s^{-1}$. It is important when you consider interactions between bodies that you understand the vector nature of momentum.

Worked example

Calculate the momentum of a cruise liner of mass 20 000 tonnes when it is travelling at $6.0\,m\,s^{-1}$ (1 tonne = 1000 kg).

Answer

Convert the mass to kg:

$$20\,000\,t = 20\,000 \times 1000\,kg = 20\,000\,000\,kg$$

$$p = mv = 20\,000\,000 \times 6.0 = 120\,000\,000\,kg\,m\,s^{-1} = 1.2 \times 10^8\,kg\,m\,s^{-1}$$

Newton's laws

Revised

Newton's first law

A body will remain at rest or move with constant velocity unless acted on by a resultant force.

The first part of this law is relatively straightforward; we do not expect an object to move suddenly for no reason. The second part requires a little more thought. A golf ball putted along level ground will gradually slow down, as will a cyclist freewheeling along a level path. In both these cases frictional forces act in the opposite direction to the velocity of the body and cause it to decelerate.

When we observe motion on the Earth we cannot eliminate friction and we 'learn' (falsely) that a force is needed to keep bodies moving. In practice, we only need that force to overcome frictional forces. If you think of a rock moving through outer space, there is no force on it — yet it will continue moving in a straight line forever, or until it encounters another body, perhaps in another galaxy.

Newton's second law

A resultant force acting on a body will cause a change in momentum in the direction of the force. The rate of change of momentum is proportional to the magnitude of the force.

Newton's first law describes what happens when there is *no* **force** on a body. The second law explains what happens when there *is* a force on a body.

The second law defines **force**: something that tends to cause a change in momentum of a body.

From this law we can write:

$$F \propto \frac{\Delta p}{\Delta t}$$

A constant of proportionality defines the size of the unit of force. The newton is defined by making the constant equal to 1, when momentum is measured in $kg\,m\,s^{-1}$ and time is measured in s.

$$F = \frac{\Delta p}{\Delta t}$$

You see from this equation that force is measured in $kg\,m\,s^{-2}$. $1\,kg\,m\,s^{-2}$ is called 1 N (newton).

Worked example

A golf ball of mass 45 g is putted along a level green with an initial velocity of $4.0\,m\,s^{-1}$. It decelerates at a constant rate and comes to rest after 3.0 s. Calculate the frictional force on the ball.

Answer

Convert the mass to kg:

$$45\,g = \frac{45}{1000}\,kg = 0.045\,kg$$

initial momentum $= 0.045 \times 4 = 0.18\,kg\,m\,s^{-1}$

final momentum = 0

change in momentum $= -0.18\,kg\,m\,s^{-1}$

$$F = \frac{\Delta p}{\Delta t} = \frac{-18}{3.0} = -0.060\,N$$

The minus sign in the answer shows that the force is acting in the opposite direction from the initial velocity.

Acceleration of a constant mass

In many situations, including the previous worked example, the mass of the body on which the force is applied remains constant (or nearly constant). Consider the basic equation:

$$F = \frac{\Delta p}{\Delta t}$$

Now $\Delta p = \Delta(mv)$ and if m is constant this can be rewritten as $p = m\Delta v$. Therefore:

$$F = \frac{m\Delta v}{\Delta t}$$

but:

$$\frac{\Delta v}{\Delta t} = \text{acceleration}$$

so:

$$\boldsymbol{F = ma}$$

The previous worked example could be solved using this equation, rather than the rate of change of momentum.

Worked example

A car of mass 1.2 tonnes accelerates from $5\,m\,s^{-1}$ to $30\,m\,s^{-1}$ in 7.5 s. Calculate the average accelerating force on the car.

Answer

$$\text{acceleration} = \frac{\text{change in velocity}}{\text{time taken}} = \frac{30-5}{7.5} = 3.3\,m\,s^{-2}$$

Convert the mass to kilograms:

$1.2\,t = 1200\,kg$

force = mass × acceleration = 1200 × 3.3 = 4000 N

This equation also gives a deeper insight into the concept of mass. You can see that the greater the mass of a body, the harder it is to change its uniform velocity. You begin to see that mass is a measure of this 'reluctance to change', or **inertia**.

Newton's third law

The third law looks at the interaction between two bodies.

If body A exerts a force on body B then body B will exert a force on body A of equal magnitude but in the opposite direction.

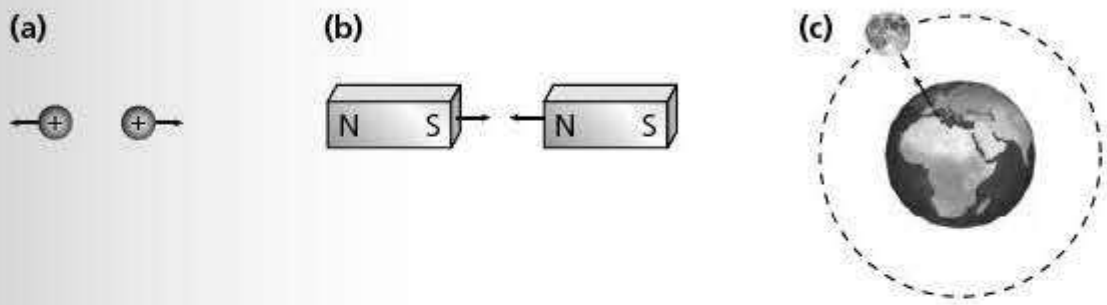

Figure 4.1 (a) Two protons repel each other, (b) two magnets attract each other, (c) the Earth and the Moon attract each other

The examples in Figure 4.1 show forces on two bodies of roughly equal size; it is easy to appreciate that the forces in each example are of equal size. However, it is also true with objects of very different sizes. For example, when you jump off a wall there is a gravitational pull on you from the Earth that pulls you down towards the ground (see Figure 4.2). What you do not think about is that you also pull the Earth upwards towards you with an equal sized force. Of course, the movement of the Earth is negligible because it is so much more massive than you are — but the force is still there.

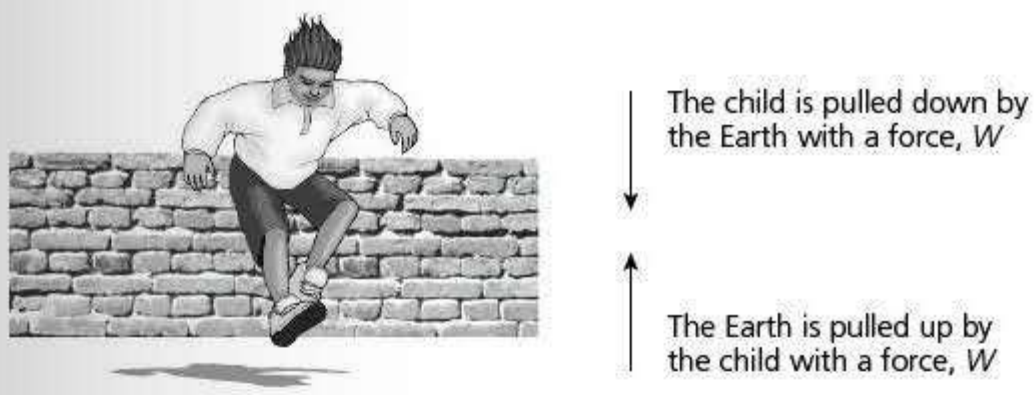

Figure 4.2 Interaction between two bodies

Linear momentum and its conservation

Principle of conservation of momentum

Revised

One of the useful results that can be developed from Newton's third law is that momentum is conserved in any interaction. This means that the total momentum of a closed system (that is, a system on which no external forces act) is the same after an interaction as before.

Consider two bodies that move towards each other, as in Figure 4.3, and then stick to each other after the collision.

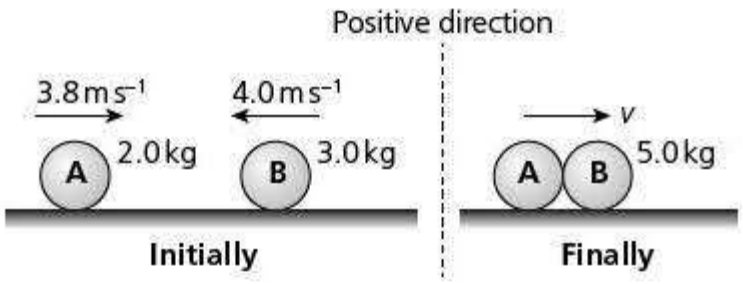

Figure 4.3 Collision between two bodies

total momentum before the collision = total momentum after the collision

If we consider the positive direction to be from left to right:

$(2.0 \times 3.8) + (3.0 \times -4.0) = 5v$

$-4.4 = 5v$

$v = -0.88\,\text{m s}^{-1}$

The negative sign means that the velocity after the collision is from right to left.

A formal statement of the law is as follows:

The total momentum of a closed system before an interaction is equal to the total momentum of that system after the interaction.

Collisions in two dimensions

The example above considers a head-on collision, where all the movement is in a single direction. The law applies equally if there is a glancing collision and the two bodies move off in different directions. In this type of problem the momenta must be resolved so that the conservation of momentum be considered in two perpendicular directions.

Figure 4.4

Figure 4.4 shows a disc A of mass m_A, with a velocity u, moving towards a stationary disc B of mass m_B. The discs collide. After the collision disc A moves off with velocity v_A at an angle θ to its original velocity and disc B moves with a velocity v_B at an angle of ϕ to the original velocity of A.

Momenta parallel to u:

momentum before collision = $m_A u$

momentum after collision = $m_A v_A \cos\theta + m_B v_B \cos\phi$

Therefore:

$m_A u = m_A v_A \cos\theta + m_B v_B \cos\phi$

Momenta perpendicular to u:

momentum before collision = 0

momentum after collision = $m_A v_A \sin\theta + m_B v_B \sin\phi$

Therefore:

$0 = m_A v_A \sin\theta + m_B v_B \sin\phi$

Expert tip

- The angles at which A and B move must both be measured in the same direction round the circle; in this example the anticlockwise direction is chosen. This makes $\sin\phi$ a negative quantity.

Worked example

A particle moves towards a stationary particle of equal mass m, with a velocity u of $2.00\,\mathrm{m\,s^{-1}}$. After the collision one particle moves off with a velocity $1.00\,\mathrm{m\,s^{-1}}$ at an angle of 60° to the original velocity. The second particle moves off with a velocity of magnitude $1.73\,\mathrm{m\,s^{-1}}$. Calculate the angle the second particle makes with the original velocity.

Answer

Momenta parallel to u:

momentum before collision = $2m$

momentum after collision = $1.00m\cos 60 + mv_B\cos\phi$

Therefore:

$2m = 1.00m\cos 60 + mv_B\cos\phi$

$2 = 0.5 + v_B\cos\phi$

$v_B\cos\phi = 1.5$ [equation 1]

Momenta perpendicular to u:

momentum before collision = 0

momentum after collision = $1.00m\sin 60 + mv_B\sin\phi$

Therefore:

$0 = 1.00m\sin 60 + mv_B\sin\phi$

$0 = 0.866 + v_B\sin\phi$

$v_B\sin\phi = 0.866$ [equation 2]

Divide equation 2 by equation 1:

$$\frac{v_B\sin\phi}{v_B\cos\phi}\,(=\tan\phi) = \frac{-0.866}{1.5}$$

$\tan\phi = 0.577 \quad \phi = -30°$

Types of interaction

Revised

Elastic

In an elastic interaction not only is momentum conserved but kinetic energy is also conserved. On the macroscopic scale this is rare. However, many interactions do approximate to being perfectly elastic and the mathematics of an elastic interaction can be used to model these. On the microscopic scale, for example, the collision between two charged particles such as protons can be considered to be elastic.

It is worth noting that in any perfectly elastic collision the relative speed of approach before the interaction is equal to the relative speed of separation after the interaction. A good example of this is the nearly elastic interaction of a golf ball being struck by the much more massive club (Figure 4.5).

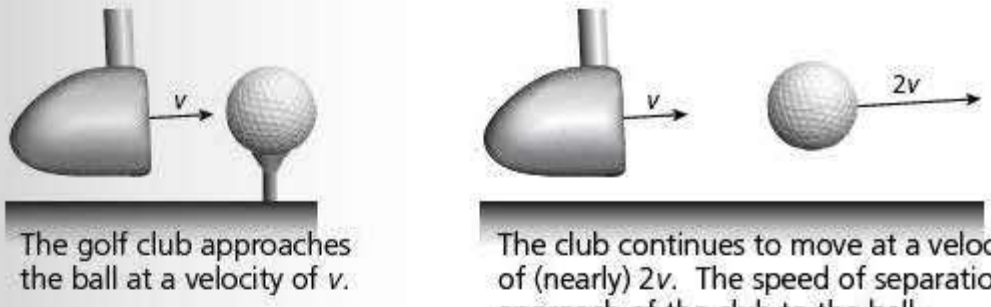

The golf club approaches the ball at a velocity of v.

The club continues to move at a velocity of (very nearly) v. The ball moves off at a speed of (nearly) $2v$. The speed of separation of the ball from the club is equal to the speed of approach of the club to the ball.

Figure 4.5 An elastic collision

Inelastic

In an inelastic collision some of the initial kinetic energy is converted into other forms, such as sound and internal energy. The kinetic energy is less after the collision than before it. As in all collisions, momentum is conserved. There are

numerous examples and degrees of inelastic collision — from nearly perfectly elastic, such as one billiard ball striking another, to two bodies sticking together, such as two identical trolleys colliding and sticking together as shown in Figure 4.6.

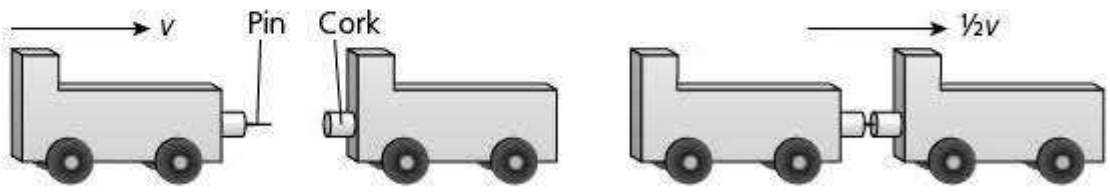

One trolley moves towards a second identical stationary trolley with a speed v.

The two trolleys stick together and move off with a combined speed of ½v.

Figure 4.6 An inelastic collision

Worked example

A glider of mass 0.20 kg is moving at 3.6 m s^{-1} on an air track towards a second glider of mass 0.25 kg, which is moving at 2.0 m s^{-1} in the opposite direction. When the two gliders collide they stick together.

(a) Calculate their joint velocity after the collision.

(b) Show that the collision is inelastic.

Answer

(a) momentum before the collision = (0.20 × 3.6) + (0.25 × −2.0)

= 0.22 kg m s^{-1}

momentum after the collision = (0.20 + 0.25)v = 0.45v, where v is the velocity of the two gliders after the collision

momentum after the collision = momentum before the collision

0.22 = 0.45v

v = 0.49 m s^{-1}

(b) kinetic energy before the collision = (½ × 0.2 × 3.6^2) + (½× 0.25 × 2.0^2)

= 1.3 + 0.5 = 1.8 J

kinetic energy after the collision = (½ × 0.45 × 0.49^2) = 0.054 J

The kinetic energy after the collision is less than the kinetic energy before the collision, therefore the collision is inelastic.

Expert tip

Note that each step in the explanation is clearly explained and that the final comment completes the answer.

Expert tip

An elastic collision between two equal masses always leads to the two masses having velocities, after the collision, that are perpendicular to each other. Refer back to the worked example on page 31, which involves an elastic collision.

Revision activity

- Work with a partner. One of you gives a key term from this chapter, and the other gives an explanation of the term. Change places until all the key terms have been covered. Do this at the end of every chapter.

Now test yourself

Tested

1 A ball-bearing falls at a constant speed through oil. Name the forces acting on it in the vertical direction and state the magnitude of the resultant force on it.

2 A car of mass 1200 kg accelerates from rest to 18 m s^{-1} in 6.3 s. Calculate:
   a the acceleration of the car
   b the average resultant force acting on it
   c the momentum of the car when it is travelling at 18 m s^{-1}

3 A ball of mass 250 g travelling at 13 m s^{-1} collides with and sticks to a second stationary ball of mass 400 g.
   a Calculate the speed of the balls after the impact.
   b Show whether or not the collision is elastic.

4 A disc of mass 2.4 kg is moving at a velocity of 6.0 m s^{-1} at an angle of 40° west of north. Calculate its momentum in:
   a the western direction
   b the northern direction

Answers on p.215

5 Forces, density and pressure

Types of force

In your work before AS you will have met the idea of a force being a push or a pull. You should now recognise the slightly more sophisticated idea that a force causes, or tends to cause, a change in the velocity of a body.

You have met various types of force already. Here is a list of the types of force with which you should be familiar:

- gravitational forces
- electric forces
- upthrust or buoyancy forces
- frictional and viscous forces

Gravitational forces

Revised

A mass in a gravitational field experiences a force. You have already seen that the size of the force depends on the strength of the gravitational field and the mass of the object:

$$F = mg$$

where F is force (or weight), m is mass of the body and g is the gravitational field strength.

Near the Earth's surface (or any planetary-sized body) the gravitational field is uniform. Therefore, the gravitational force is the same wherever the body is placed near the planet's surface. Consequently, the body will fall with a constant acceleration (ignoring air resistance). Near the Earth's surface the gravitational field is approximately $9.8\,\mathrm{N\,kg^{-1}}$. This will cause any object to fall with an acceleration of $9.8\,\mathrm{m\,s^{-2}}$. The gravitational field near the Moon is $1.6\,\mathrm{N\,kg^{-1}}$. Consequently, an object near the Moon's surface will fall towards the Moon's surface with an acceleration of $1.6\,\mathrm{m\,s^{-2}}$.

Electric forces

Revised

A charged object will experience forces due to other charged objects nearby. The behaviour of a charged object in a uniform electric field is investigated in Topic 10.

Upthrust or buoyancy forces

Revised

Bodies wholly or partly immersed in fluids experience an upthrust due to the slightly different pressures exerted on their lower and upper surfaces. This is explored further on page 39.

Frictional and viscous forces

Revised

Frictional forces have already been discussed. The term 'friction' is usually applied where there is resistance to motion due to contact between two solids. It arises because no two surfaces are perfectly smooth and the lumps in them tend to interlock when there is relative movement between the bodies (Figure 5.1)

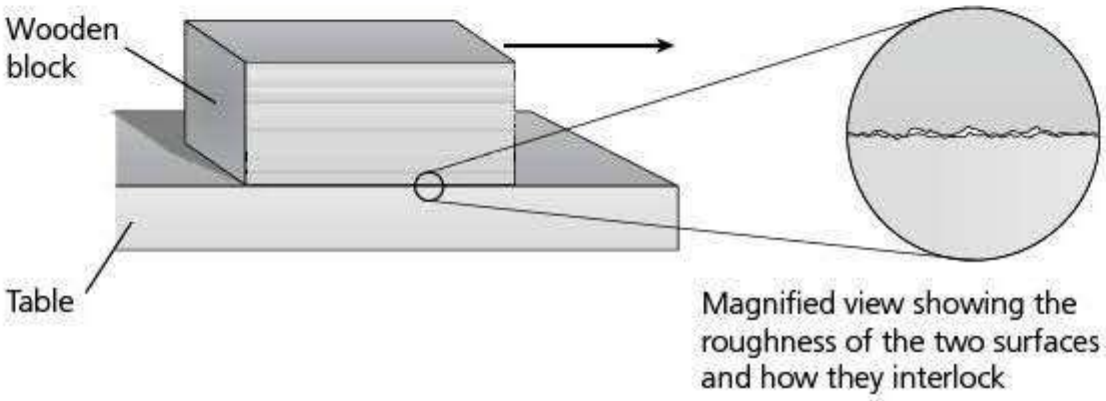

Figure 5.1 Frictional forces

The term 'viscous' tends to be used when fluids (liquids and gases) are involved. It is the difference in viscosity that makes water flow much more quickly than oil. Similarly, the viscous forces on a body travelling through oil are much larger than those on an object travelling through water. Gases tend to produce far less viscous drag than liquids. Even so, at high speeds the viscous drag on cars and aircraft is significant.

Turning effects of forces

Moment of a force

Revised

The turning effect of a force about a point (sometimes known as 'torque') is known as its moment about that point. When considering a single force, the point about which the force is producing its turning effect must be specified.

The moment of a force about a point equals the force multiplied by the perpendicular distance of the line of action of the force from the point.

Consider a spanner turning a nut (Figure 5.2). The force is not perpendicular to the spanner. Therefore either the component of the force perpendicular to the spanner or the perpendicular distance from the centre of the nut to the line of action of the force must be used in the calculation. The perpendicular distance of the line of action of the 30 N force from the centre of the nut is the distance $x = 25 \cos 20 = 23.5$ cm. Hence the torque about the centre of the nut is $30 \times 23.5 = 705$ N cm.

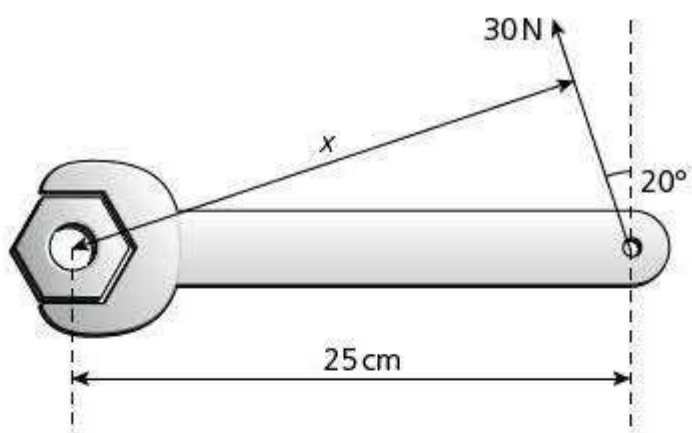

Figure 5.2 Turning forces on a spanner

Expert tip

A force itself does not have a unique moment. It all depends on the point about which the force has a turning effect. Therefore when referring to a moment you should always refer to the point about which the moment is produced.

It is worth noting that torque is a vector. If a torque that tends to turn a body in a clockwise sense is considered to be positive, then a torque that tends to cause the body to move in an anticlockwise sense is considered negative.

Torque of a couple

Revised

A couple is produced when two parallel forces of equal magnitude act in opposite directions and have lines of action that do not coincide. You apply a couple when you turn on a tap. When considering the torque of a couple you do not need to worry about the specific point that the torque is produced about. The torque is the same whatever point is chosen. The torque of the couple is equal to the sum of the moments about any point of each of the two forces.

torque of a couple = magnitude of one of the forces × perpendicular distance between the lines of action of the forces

A couple tends to produce rotation only. A single force may tend to produce rotation but it will always tend to produce acceleration as well (Figure 5.3).

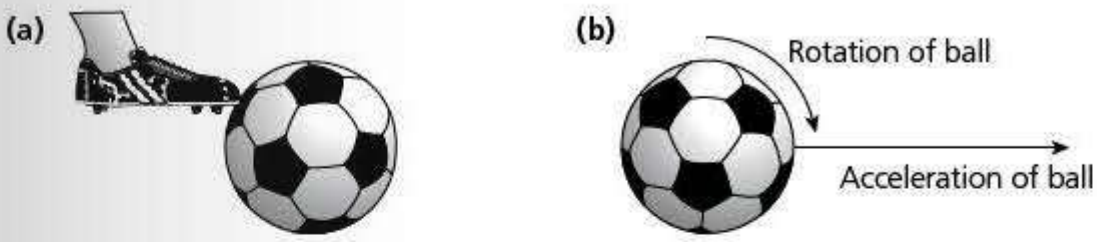

Figure 5.3 (a) A footballer kicks the ball, striking the side of the ball. (b) The ball accelerates but also tends to rotate in a clockwise direction

Equilibrium of forces

Equilibrium

Revised

If the resultant force acting on a point object is zero then it is in equilibrium. If, however, the body is of finite size then the possibility of rotational as well as translational movement must be considered.

For a body of finite size to be in equilibrium:

- the resultant force on the body must be zero
- the resultant torque on the body must be zero

The **centre of gravity** of a body is the point through which all the weight of the body may be considered to act.

Centre of gravity

The weight of a body does not act from a single point but is spread through all the particles of the body. However, it is often convenient to consider the weight acting at a single point — this point is called the **centre of gravity** of the body.

Expert tip

A term used commonly in examinations is 'a uniform body'. This means that the centre of gravity of the body is at the geometric centre of the body.

Principle of moments

Revised

The principle of moments is a restatement of the second condition for a body to be in equilibrium:

For a body to be in equilibrium, the sum of the moments about any point is zero.

A useful way of using this when you are considering coplanar forces is to say 'the clockwise moments = the anticlockwise moments'.

Worked example

A student has a uniform metre ruler of weight 1.20 N. He attaches a weight of 1.50 N at the 10.0 cm point and places the ruler on a knife edge. He adjusts the knife edge until the ruler balances. Deduce the position of the knife edge.

Answer

Draw a diagram of the set-up (Figure 5.4).

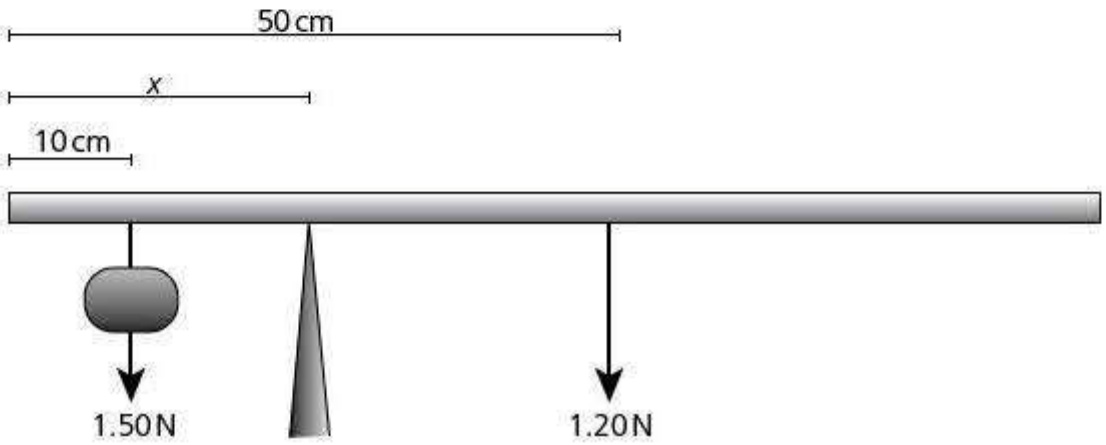

Figure 5.4

The ruler is uniform and therefore the centre of gravity is at its centre.

Take moments about the pivot:

clockwise moment = $(50 - x) \times 1.20$ N cm

anticlockwise moment = $(x - 10) \times 1.50$ N cm

For equilibrium, the clockwise moments = the anticlockwise moments:

$(50 - x) \times 1.2 = (x - 10) \times 1.5$

$x = 27.8$ cm

Representing forces in equilibrium

Revised

In the section on vectors you met the idea of using vector diagrams to add vectors acting at different angles, and you also met the concept of resolving vectors into their component parts. Vector diagrams can also be used when a body is in equilibrium.

Consider a lamp of weight W pulled to one side with a horizontal force F so that it makes an angle θ with the vertical, as shown in Figure 5.5.

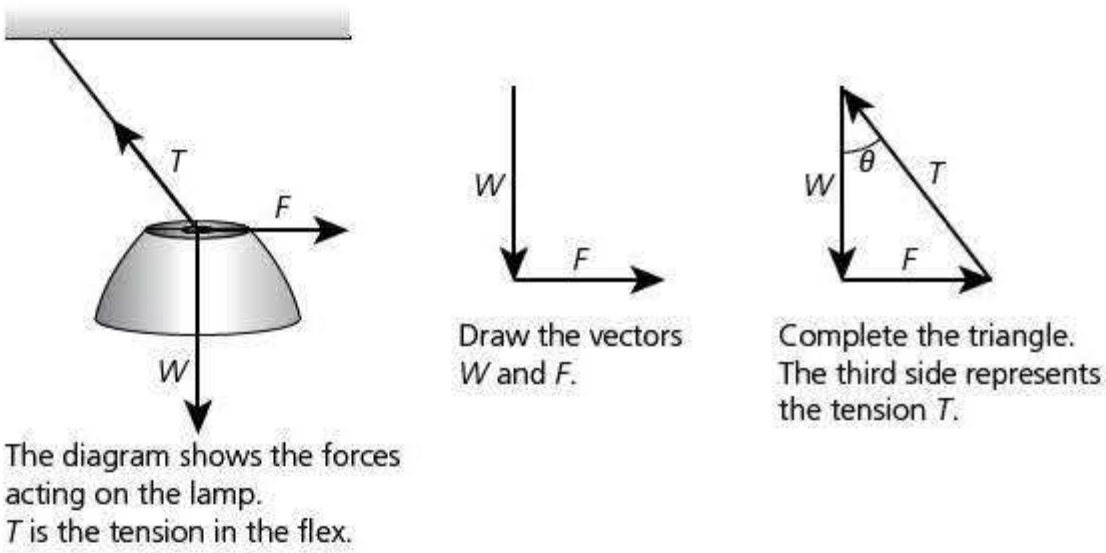

Figure 5.5 Forces in equilibrium

Note the difference between this and using the triangle of forces to find the resultant of two forces. This is a closed triangle, with all the arrows going the same way round the triangle. This shows that the sum of these three forces is zero and that the body is in equilibrium.

Worked example

A helium balloon is tethered to the ground using a cable that can withstand a maximum force of 10.0 kN before breaking. The net upward force on the balloon due to its buoyancy is 8.0 kN (Figure 5.6).

Calculate the maximum horizontal force the wind can produce on the balloon before the cable snaps, and the angle the cable makes with the vertical when this force is applied.

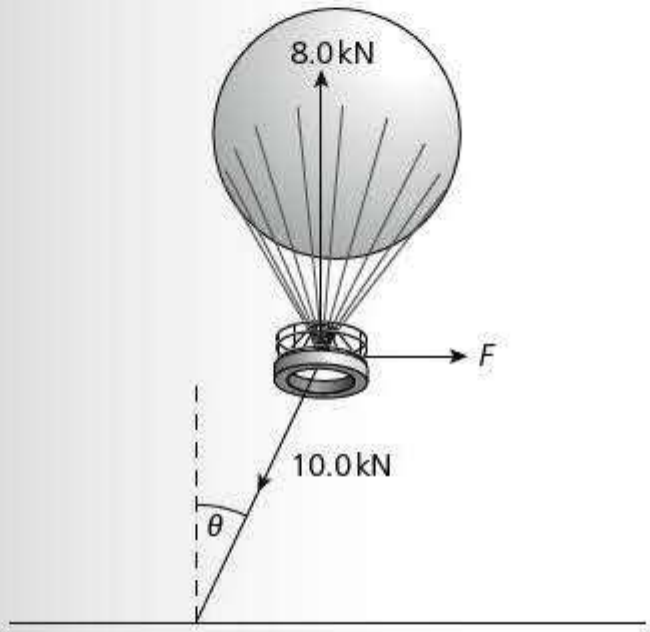

Figure 5.6

Answer

Refer to Figure 5.7:

1. Draw a vertical arrow of length 4.0 cm to represent the upthrust on the balloon.
2. Draw a horizontal construction line from the top of the vertical arrow.
3. Separate the needle and the pencil tip of your compasses by a distance of 5 cm to represent the tension force in the cable. Place the needle on the bottom of the vertical line and draw an arc to intersect with the horizontal construction line.
4. Join from the intersection to the bottom of the vertical line. This represents the tension in the cable.
5. Draw an arrow to represent the horizontal force from the wind.

The length of the horizontal arrow = 3.0 cm. Therefore the force due to the wind is 6.0 kN. The angle with the vertical, θ, measured with a protractor = 37°.

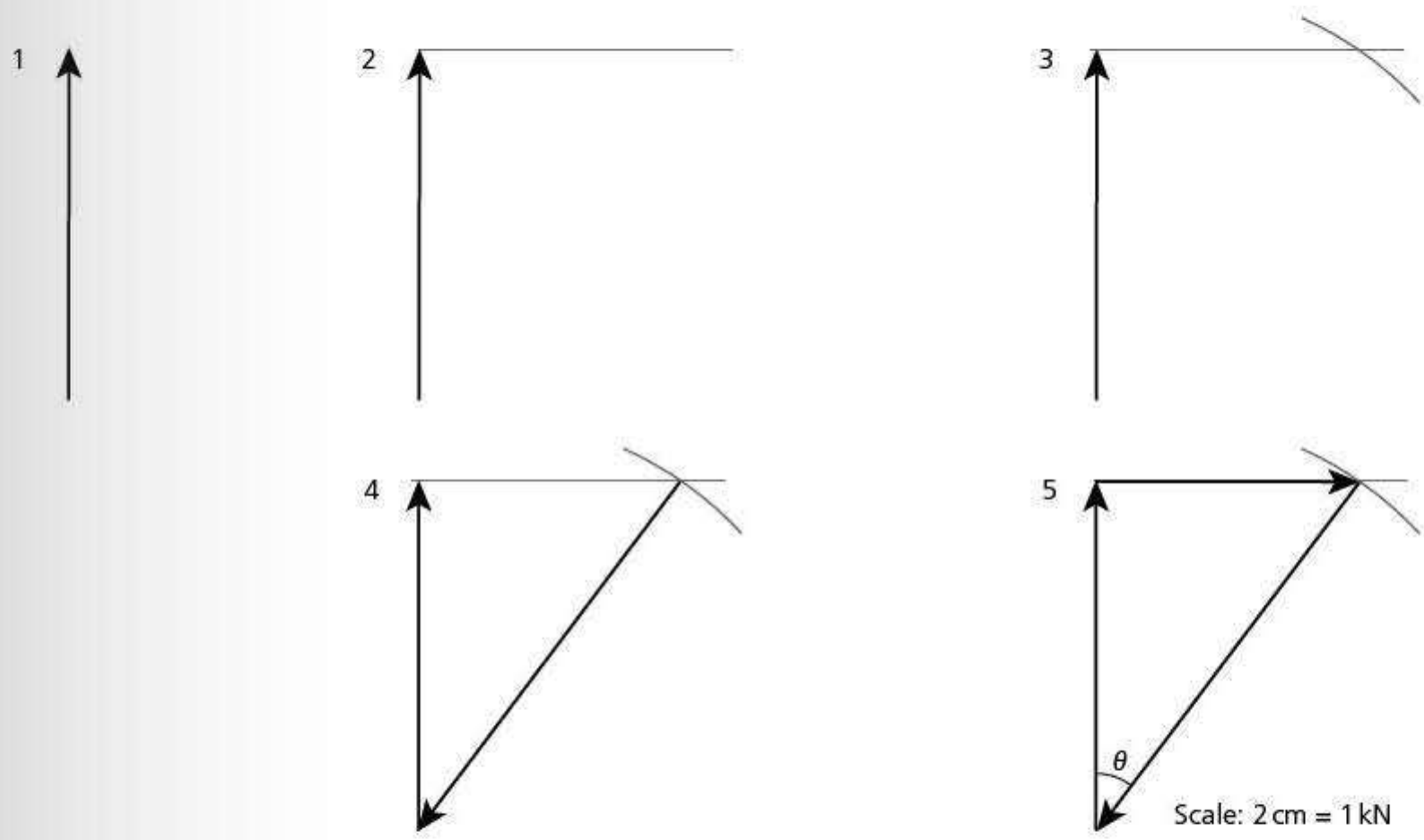

Figure 5.7

Density and pressure

Density

Revised

You will have met the concept of density in earlier work.

The unit of density is kilograms per metre cubed ($kg\,m^{-3}$) or grams per centimetre cubed ($g\,cm^{-3}$).

Density is the mass per unit volume:

$$\text{density } (\rho) = \frac{\text{mass}}{\text{volume}}$$

Worked example

A beaker has a mass of 48 g. When 120 cm^3 of copper sulfate solution are poured into the beaker it is found to have a total mass of 174 g. Calculate the density of the copper sulfate solution.

Answer

mass of copper sulfate solution = 174 − 48 = 126 g

$$\rho = \frac{m}{v} = \frac{126}{120} = 1.05\,g\,cm^{-3}$$

Pressure

Revised

Pressure can easily be confused with force, the difference being that pressure considers the area on which a force acts.

Pressure is measured in newtons per metre squared ($N\,m^{-2}$). 1 $N\,m^{-2}$ is called 1 **pascal (Pa)**. It is sometimes convenient to use $N\,cm^{-2}$.

Pressure, unlike force, is a scalar. Therefore, pressure does not have a specific direction.

Pressure is the normal force per unit area:

$$\text{pressure } (p) = \frac{\text{force}}{\text{area}}$$

1 **pascal** is the pressure exerted by a force of 1 newton acting normally on an area of 1 metre squared.

Worked example

Coins are produced by stamping blank discs with a die. The diameter of a blank disc is 2.2 cm and the pressure on the disc during stamping is 2.8×10^5 MPa. Calculate the force required to push the die against the blank disc.

Answer

area of the coin = $\pi(d/2)^2 = \pi(2.2/2)^2 = 3.8\,cm^2 = 3.8 \times 10^{-4}\,m^2$

$$\text{pressure} = \frac{\text{force}}{\text{area}}$$

Hence:

force = pressure × area = $2.8 \times 10^5 \times 10^6 \times 3.8 \times 10^{-4} = 1.06 \times 10^8$ N

Pressure in a liquid

A liquid exerts pressure on the sides of its container and on any object in the liquid. The pressure exerted by the liquid increases as the depth increases. Figure 5.8 shows a beaker containing a liquid of density ρ.

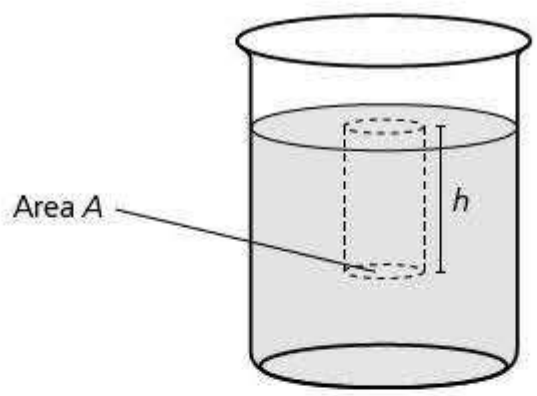

Figure 5.8

The pressure on the area A is due to the weight of the column of water of height h above it.

weight = mass × g (where g is the gravitational field strength)

mass of the column = density × volume, where the volume of the column of water = $A \times h$

mass of the column = $\rho \times A \times h$

weight of the column = $\rho \times A \times h \times g$

pressure on area $A = \frac{\text{force}}{\text{area}} = \frac{\text{weight}}{\text{area}}$

$= \rho \times A \times h \times \frac{g}{A}$

pressure = ρhg

Worked example

Atmospheric pressure is 1.06×10^5 Pa. A diver descends to a depth of 24 m in seawater of density 1.03×10^3 kg m^{-3}. Calculate the total pressure on the diver.

Answer

pressure due to seawater = $h\rho g = 24 \times 1.03 \times 10^3 \times 9.8 = 2.42 \times 10^5$ Pa

total pressure = $2.42 \times 10^5 + 1.06 \times 10^5 = 3.48 \times 10^5$ Pa

Typical mistake

The total pressure is equal to the pressure due to the water plus atmospheric pressure. It is easy to forget to include atmospheric pressure.

Revision activity

- Include these 'must-learn' equations on your bedroom mirror list:

$$\text{density } (\rho) = \frac{\text{mass}}{\text{volume}}$$

$$\text{pressure } (p) = \frac{\text{force}}{\text{area}}$$

You can now see how upthrust (or buoyancy force) is produced. Consider a rectangular box in a liquid — the bottom of the box is at a greater depth than the top. Thus the pressure on the bottom is greater than the pressure on the top. Since the two surfaces have the same area, the force on the bottom is greater than the force on the top and the box is pushed upwards.

Now test yourself

Tested

1 A uniform picture of weight 3.6 N is attached to a wall using a string as shown in Figure 5.9. Each end of the string makes an angle of 40° with the horizontal. Calculate the tension in the string.

2 Two forces of 8.0 N act on either side of a bolt head of diameter 2.4 cm. Calculate the couple produced on the bolt.

3 A uniform metre ruler is pivoted on the 30 cm mark. When a mass of 0.20 kg is hung from the 14 cm mark the ruler balances. Calculate the mass of the ruler.

4 A uniform metre ruler is pivoted at its midpoint. A weight of 6.00 N is hung from the 30.0 cm mark. The ruler is held in equilibrium by a string attached to the 10 cm mark making an angle of 60° with the ruler. Calculate the tension in the string.

5 Oil of density 850 kg m^{-3} is poured into a measuring cylinder to a depth of 0.800 m. Calculate the pressure exerted on the base of the measuring cylinder by the oil.

Figure 5.9

Answers on p.215

6 Work, energy and power

Work and efficiency

Work

Revised

Work has a precise meaning in physics and care must be taken when using this term. The unit of work is the **joule (J)**.

Both force and displacement are vectors. Note that for work to be done there must be a component of the force that is parallel to the displacement.

When calculating work done, care must be taken that the force and the displacement are parallel. Consider a child sliding down a slide (Figure 6.1).

Work is defined as being done when a force moves its point of application in the direction in which the force acts.

1 joule of work is done when a force of 1 newton moves its point of application 1 metre in the direction of the force.

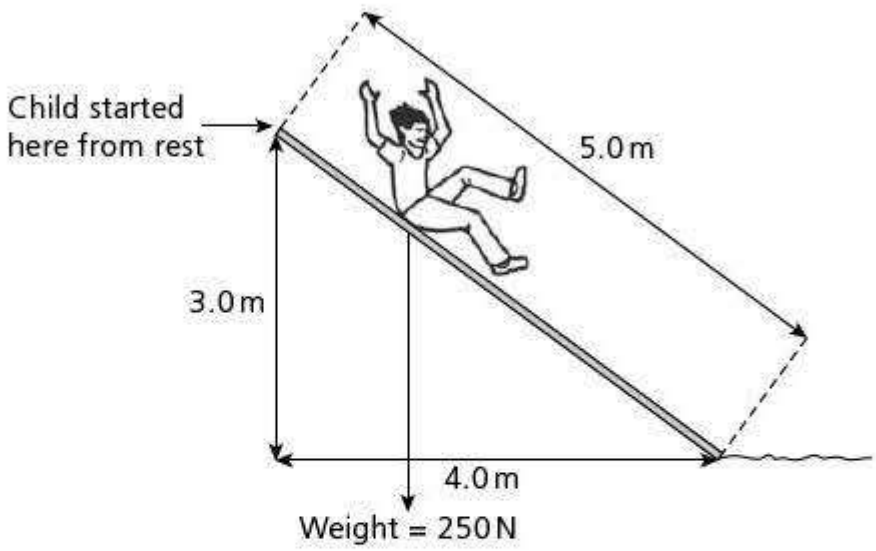

Figure 6.1

The force causing the child to move down the slope is the child's own weight, 250 N, which acts vertically downwards. The total distance moved is 5.0 m but the displacement **parallel to the force** is only 3.0 m. So:

work done by the force = 250 N × 3.0 m = 750 J

It is worth noting that in this example the work is done on the child by gravity, rather than the child doing work.

In general:

$$\text{work done} = \begin{matrix}\text{component of the force}\\ \text{parallel to displacement}\end{matrix} \times \text{the displacement}$$

$$\textbf{work done} = \boldsymbol{Fx\cos\theta}$$

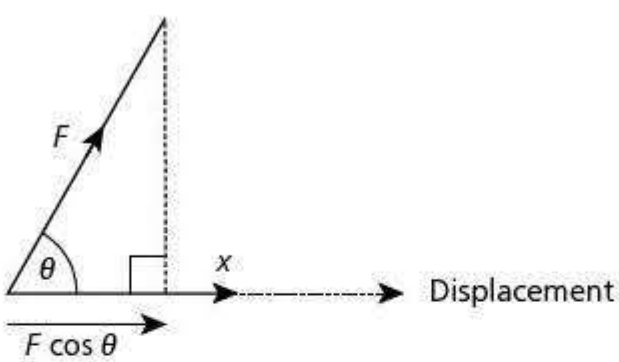

Figure 6.2

Worked example

Figure 6.3 shows a man wheeling a barrow. He applies a force of 540 N to the barrow in a direction 75° from the horizontal. He moves the barrow 30 m along level ground. Calculate the work he does against friction.

Answer

work done = $Fx\cos\theta$

work done = $540 \times 30 \times \cos 75 = 4200\,\text{J}$

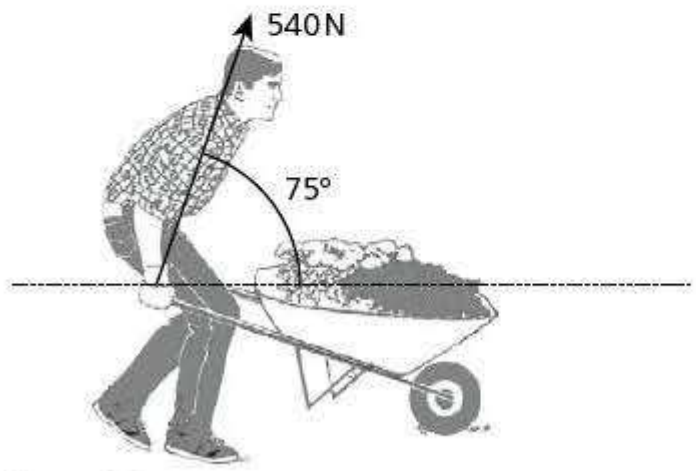

Figure 6.3

Energy conversion and conservation

Energy

Revised

Energy is not an easy concept and, like work, it has a precise meaning in physics. Like work, energy is measured in joules. When a body has 300 J of energy it means that it can do 300 J of work. Different forms of energy are shown in Table 6.1.

Energy is defined as the ability (or capacity) to do work.

Table 6.1

Type of energy	Description
Kinetic	The ability to do work due to the movement of a body
Gravitational potential	The ability to do work due to the position of a body in a gravitational field
Elastic potential	The ability to do work due to the deformation of a body (e.g. a compressed or extended spring)
Sound	The ability to do work due to the kinetic and potential energy of the vibrating particles in a sound wave
Internal	The sum of the random kinetic and potential energies of the molecules in a body.
Electrical potential	The ability to do work due to the position of a charged particle in an electric field
Chemical potential	The ability to do work due to potential energy of the particles making up substances
Nuclear potential	The ability to do work due to the potential energy of the subatomic particles in the nuclei of atoms

Energy conversion and efficiency

Revised

Machines are used to do work, converting energy from one form to another. In practice, machines are never 100% efficient. This means that the total energy input is greater than the useful work output. Some of the energy input is converted to unwanted forms such as thermal energy and sound.

$$\text{efficiency of a machine} = \frac{\text{useful work output}}{\text{total energy input}} \times 100\%$$

Efficiency is quoted either as a ratio or a percentage. Consequently, efficiency has no units.

Worked example

A petrol motor is used to lift a bag of sand of mass 2700 kg from the ground up to a window 12 m above the ground. Eighteen per cent of the input energy is converted into gravitational energy of the sand.

(a) Calculate the energy input to the motor.

(b) Discuss the energy changes involved in the process.

Answer

(a) $\text{efficiency} = \frac{\text{useful work done}}{\text{energy input}} \times 100\%$

useful work done = $mgh = 2700 \times 9.8 \times 12 = 317\,520\,\text{J}$

$18 = \frac{317\,520}{\text{energy input}} \times 100\%$

$\text{energy input} = \frac{317\,520 \times 100}{18} = 1\,764\,000\,\text{J} \approx 1.8\,\text{MJ}$

(b) The chemical potential energy of the petrol is converted into internal energy in the motor and 18% of this is used to do work against gravity in lifting the sand. The remainder is transferred to the surroundings as they are heated.

Expert tip

No attempt has been made to discuss what happens inside the motor. This is extremely complex. There are transient forms of energy, such as elastic potential energy, as the fuel is burnt and put under pressure, and the conversion of this to kinetic energy of the oscillating piston. Attempts to discuss what happens inside the motor are unlikely to succeed and should be avoided.

Conservation of energy

Revised

The law of conservation of energy states that the total energy of a closed system is constant.

For examination purposes, you should explain this statement by saying that this means that energy can be transformed from one form to another but it can neither be created nor destroyed — the total energy of a closed system will be the same before an interaction as after it. When energy is transformed from one form to another either:

- work is done — for example, a man does work against gravity by lifting a large mass onto his shoulders

or

- energy is radiated or received in the form of electromagnetic radiation — for example, internal energy is radiated away from the white hot filament of a lamp by infrared and light radiation

Potential energy and kinetic energy

Gravitational potential energy

Revised

Consider a mass m lifted through a height h.

The weight of the mass is mg, where g is the gravitational field strength.

work done = force × distance moved

$= mg\Delta h$

Due to its new position, the body is now able to do extra work equal to $mg\Delta h$. It has gained extra potential energy, $\Delta W = mg\Delta h$:

change in potential energy = $mg\Delta h$

If we consider a body to have zero potential energy when at ground level, we can say that:

gravitational potential energy (E_p) = mgh

In these examples we have considered objects close to Earth's surface, where we can consider the gravitational field to be uniform. In your A-level studies you will explore this further and consider examples where the gravitational field is not uniform.

Kinetic energy

Revised

Consider a body of mass m, at rest, which accelerates to a speed of v over a distance s.

work done in accelerating the body = force × distance

$W = Fs$

But:

$F = ma$

In the equation $v^2 = u^2 + 2as$, $u = 0$. Hence:

$$F = ma = \frac{mv^2}{2s}$$

$$W = Fs = \frac{mv^2}{2s}s = \tfrac{1}{2}mv^2$$

The body is now able to do extra work = $\tfrac{1}{2}mv^2$ due to its speed. It has **kinetic energy = $\tfrac{1}{2}mv^2$**

Worked example

A cricketer bowls a ball of mass 160 g at a speed of 120 km h^{-1}. Calculate the kinetic energy of the ball.

Answer

Convert the speed from km h^{-1} to m s^{-1}:

$$120\,\text{km h}^{-1} = 120 \times \frac{1000}{3600}\,\text{m s}^{-1} = 33.3\,\text{m s}^{-1}$$

Convert 160 g to kg = 0.16 kg.

$E_k = \tfrac{1}{2}mv^2 = \tfrac{1}{2} \times 0.16 \times 33.3^2$

$E_k = 89\,\text{J}$

Elastic potential energy

Revised

There are various types of potential energy, one being elastic potential energy (sometimes referred to as strain energy). When a force causes an object to change its shape, the particles of the body are either squashed together or pulled apart. Therefore, they have extra potential energy. This is looked at in quantitative terms in the section on deformation of solids.

Power

Power (P) is the rate of doing work or transforming energy. The unit of power is the **watt (W)**.

$$\text{power} = \frac{\text{work done}}{\text{time taken}} = \frac{\text{energy transformed}}{\text{time taken}}$$

There is a power of 1 watt when energy is transferred or work is done at the rate of 1 joule per second.

Worked example

A pebble of mass 120 g is fired from a catapult. The pebble accelerates from rest to 15 m s^{-1} in 0.14 s. Calculate the average power gain of the pebble during the firing process.

Answer

120 g = 0.12 kg

gain in kinetic energy = $\tfrac{1}{2}mv^2 = 0.5 \times 0.12 \times 15^2 = 13.5\,\text{J}$

$$\text{power gain} = \frac{13.5}{0.14} = 96\,\text{W}$$

Power and velocity

Revised

Consider a car travelling at constant velocity v along a straight, level road. The engine must continue to do work against friction. If the frictional force is F, then the engine will supply an equal-sized force in the opposite direction. The work done by the engine, ΔW, in time Δt is $F\Delta s$, where Δs is the distance travelled in time Δt:

$$\text{power} = \frac{F\Delta s}{\Delta t}$$

but $\frac{\Delta s}{\Delta t} = v$, therefore:

$$\textbf{power} = \boldsymbol{Fv}$$

Worked example

A cyclist is travelling along a straight level road at a constant velocity of 27 km h^{-1} against total frictional forces of 50 N. Calculate the power developed by the cyclist.

Answer

Convert the velocity from km h^{-1} into m s^{-1}:

$$27\,\text{km h}^{-1} = 27 \times \frac{1000}{3600} = 7.5\,\text{m s}^{-1}.$$

power = force × velocity

$= 7.5 \times 50 = 375\,\text{W}$

Revision activities

- Make a flow chart to show how the units and/or dimensions of the quantities in the following list are linked.

  acceleration energy work force length mass power time

- Include these 'must-learn' equations on your bedroom mirror list:

  work done $= Fx\cos\theta$

  $E_p = mgh$

  $E_k = \frac{1}{2}mv^2$

  $$\text{efficiency of a machine} = \frac{\text{useful work output}}{\text{total energy input}} \times 100\%$$

  $$\text{power} = \frac{\text{work done}}{\text{time taken}} = \frac{\text{energy transformed}}{\text{time taken}}$$

  power $= Fv$

Now test yourself

Tested

1 An incline is at an angle of 30° to the horizontal. A force of 25 N pulls a box 4.0 m along the incline. Calculate:
   a the total work done by the force
   b the work done against gravity by the force
   c the gravitational potential energy gained by the box

2 A ball of mass 0.30 kg initially at rest falls from a height of 25 m. It hits the ground at a speed of 1.8 m s^{-1}. Calculate:
   a the potential energy lost by the ball
   b the kinetic energy gained by the ball
   c the work done against friction

3 A car is travelling at a steady 24 m s^{-1} along a level road. The power output from the engine is 45 kW. Calculate the total frictional force on the car.

Answers on p.215

7 Deformation of solids

You have already seen how forces produce changes in the motion of bodies; they can also change the shape of bodies. Forces in opposite directions will tend to stretch or compress a body. If two forces tend to stretch a body they are described as **tensile**. If they tend to compress a body they are known as **compressive**.

Elastic and plastic behaviour

Forces on a spring

Revised

Figure 7.1(a) shows apparatus used to investigate the extension of a spring under a tensile force. Figure 7.1(b) shows the results of the experiment.

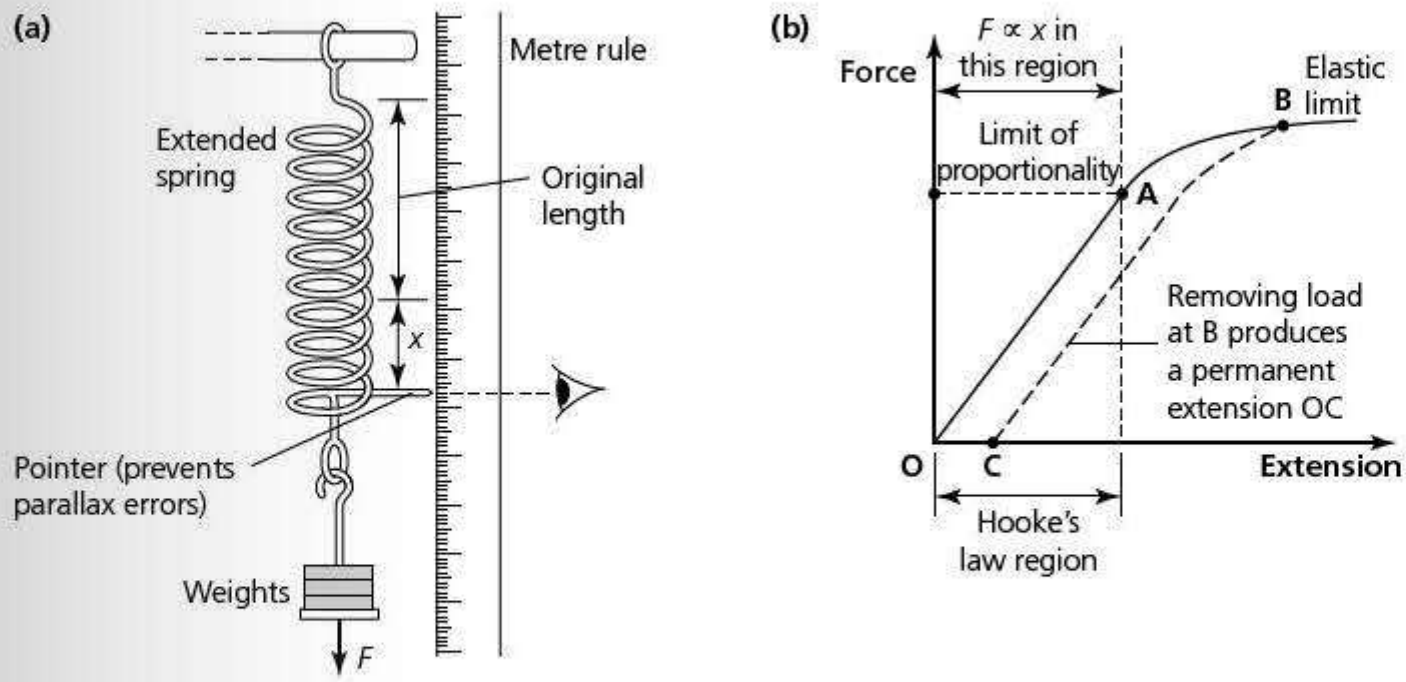

Figure 7.1

Analysing the results we see the following:

- From O to A the extension of the spring is proportional to the applied force.
- With larger forces, from A to B, the spring extends more easily and the extension is no longer proportional to the load.
- When the force is reduced, with the spring having been stretched beyond point B, it no longer goes back to its original length.

From O to A, F is proportional to x:

$$F \propto x$$

This can be written as an equality by introducing a constant of proportionality:

$$\boldsymbol{F = kx}$$

where k is the constant of proportionality, often known as the **spring constant**. The spring constant is the force per unit extension. It is a measure of the stiffness of the spring. The larger the spring constant, the larger is the force required to stretch the spring through a given extension. The unit of the spring constant is **newton per metre** ($N\,m^{-1}$).

Point A, the point at which the spring ceases to show proportionality, is called the limit of proportionality. Very close to this point, there is a point B called the **elastic limit**. Up to the elastic limit, the deformation of the spring is said to be **elastic**.

If the spring is stretched beyond the elastic limit it will not return to its original length when the load is removed. Its deformation is said to be **plastic**.

Hooke's law sums up the behaviour of many materials that behave in a similar manner to a spring:

The extension of a body is directly proportional to the applied force.

Note that Hooke's law also applies to the compression of a body. In this case, the quantity x in the equation is the compression rather than the extension.

Elastic deformation means that the body will return to its original shape when the load is removed.

Plastic deformation means that the body will not return to its original shape when the load is removed.

Energy stored in a deformed material

Revised

Figure 7.2(a) shows the extension of a body that obeys Hooke's law. The work done in stretching the body is equal to force multiplied by distance moved. This is equal to the elastic potential energy in the body. However, the force is not F, the maximum force — it is the average force, which is $\frac{1}{2}F$.

elastic potential energy = $\frac{1}{2}Fx$

This is the area of the triangle under the graph.

The general rule, even when the extension is not proportional to the load, is:

elastic potential energy = area under the load–extension graph

The equations above cannot be used with a material that has been extended beyond the limit of proportionality (Figure 7.2b) or any material that does not follow Hooke's law. However, the energy stored is still equal to the area under the graph.

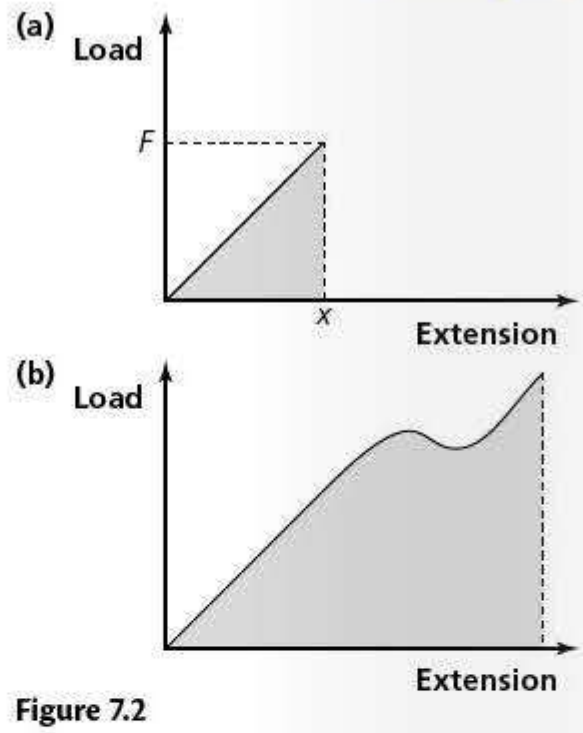

Figure 7.2

Stress and strain

Extension of a wire

Revised

Figure 7.3(a) shows the apparatus that could be used to investigate the stretching of a wire. The readings that need to be taken are shown in Table 7.1.

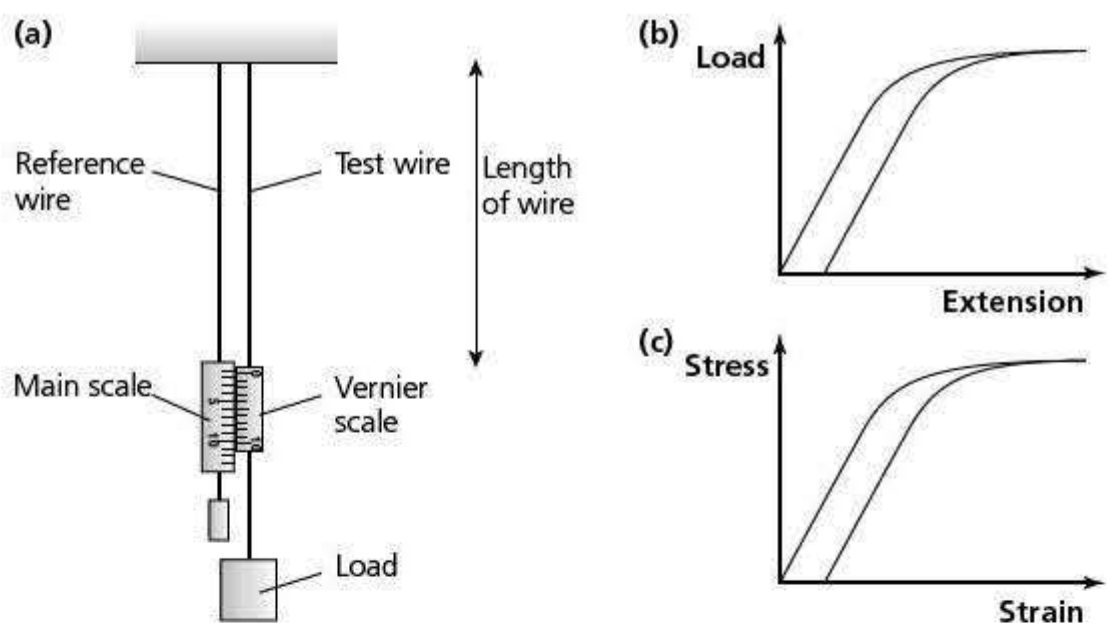

Figure 7.3

Table 7.1

Reading	Reason	Instrument
Length of wire	Direct use	Metre ruler
Diameter of wire	Enables the cross-sectional area to be found	Micrometer screw gauge
Initial and final readings from the vernier slide	The difference between the two readings gives the extension	Vernier scale

The graph obtained (Figure 7.3b) is similar to that obtained for the spring. This shows the general nature of Hooke's law.

It is useful to draw the **stress–strain** graph (Figure 7.3c), which gives general information about a particular material, rather than for a particular wire.

The unit of stress is newtons per metre squared or pascals ($N\,m^{-2} = Pa$). The formal symbol for stress is σ (the Greek letter sigma).

Strain is a ratio and does not have units. The formal symbol for strain is ε (the Greek letter epsilon).

The quantity stress/strain gives information about the elasticity of a material. This quantity is called the **Young modulus**.

$$\textbf{Young modulus} = \frac{\textbf{stress}}{\textbf{strain}} = \frac{\text{force } (F) \text{ / area } (A)}{\text{extension } (x) \text{ / length } (L)} = \frac{FL}{Ax}$$

The unit of the Young modulus is the same as for stress — the **pascal** (Pa).

Stress is defined as the force per unit cross-sectional area of the wire.

Strain is the extension per unit length of the unstretched wire.

Worked example

A force of 250 N is applied to a steel wire of length 1.5 m and diameter 0.60 mm. Calculate the extension of the wire.

(Young modulus for mild steel = 2.1×10^{11} Pa)

Answer

cross-sectional area of the wire $= \pi\left(\frac{d}{2}\right)^2 = \pi\left(\frac{0.6 \times 10^{-3}}{2}\right)^2 = 2.83 \times 10^{-7}\,m^2$

$$\text{Young modulus} = \frac{FL}{\Delta L}$$

$$2.1 \times 10^{11} = \frac{250 \times 1.5}{2.83 \times 10^{-7} \times \Delta L}$$

$$\Delta L = \frac{250 \times 1.5}{2.83 \times 10^{-7} \times 2.1 \times 10^{11}} = 6.3 \times 10^{-3}\,m = 6.3\,mm$$

Revision activity

- Add the following 'must-learn' equations to your bedroom mirror list:

  $F = kx$

  $E = \frac{1}{2}Fx = kx^2$

  $\text{Young modulus} = \frac{\text{stress}}{\text{strain}}$

  $\text{Young modulus} = \frac{FL}{Ax}$

Now test yourself

Tested

1 A spring when unloaded has a length of 15.0 cm. A load of 2.4 N is placed on the spring and its length increases to 21.4 cm.
   a Calculate the spring constant of the spring.
   b Calculate the energy stored in the spring when it is stretched to a length of 23.0 cm.
2 A wire of diameter 4.0×10^{-5} m supports a load of 4.8 N. Calculate the stress in the wire.
3 Calculate the strain on a wire of unstretched length 2.624 m which is stretched so that its length increases to 2.631 m.
4 A mild steel wire of length 1.50 m and diameter 0.76 mm has a Young modulus of 2.1 GPa. Calculate the extension of the wire when it carries a load of 45 N.

Answers on p.215

8 Waves

In this course you will meet various types of wave. Waves are a way of storing energy (**stationary waves**) and transferring energy from one place to another (**progressive waves**).

Progressive waves

Terminology

Revised

Waves are formed when particles vibrate about a mean position. Waves can be observed in many different situations. Waves are formed on the surface of water when the water is disturbed, either by an object falling into the water or by the wind blowing across the surface of the water. Waves can also be observed when a long spring is shaken from side to side or back and forth, as shown in Figures 8.2 and 8.3 on page 50.

Figure 8.1 shows (a) the displacement of a particle in a wave against time and (b) the displacement of all the particles at a particular moment in time.

- **Displacement** (x) of a particle is its distance from its equilibrium position. The unit is the metre (m).
- **Amplitude** (x_0) is the maximum displacement of a particle from its equilibrium position. The unit is the metre (m).
- **Period** (T) is the time taken for one complete oscillation of a particle in the wave. The unit is the second (s).
- **Frequency** (f) of a wave is the number of complete oscillations of a particle in the wave per unit time. The unit is the **hertz** (Hz).
- **Wavelength** (λ) is the distance between points on successive oscillations of the wave that are vibrating exactly in phase. The unit is the metre (m).
- **Wave speed** (c) is the distance travelled by the wave energy per unit time. The unit is the metre per second (m s^{-1}).

1 **hertz** is one complete oscillation per second. An **oscillation** is one complete vibration of a particle — for example, from its mean position to the position of maximum displacement in one direction, back to the mean position, then to maximum displacement in the opposite direction and finally back to the mean position.

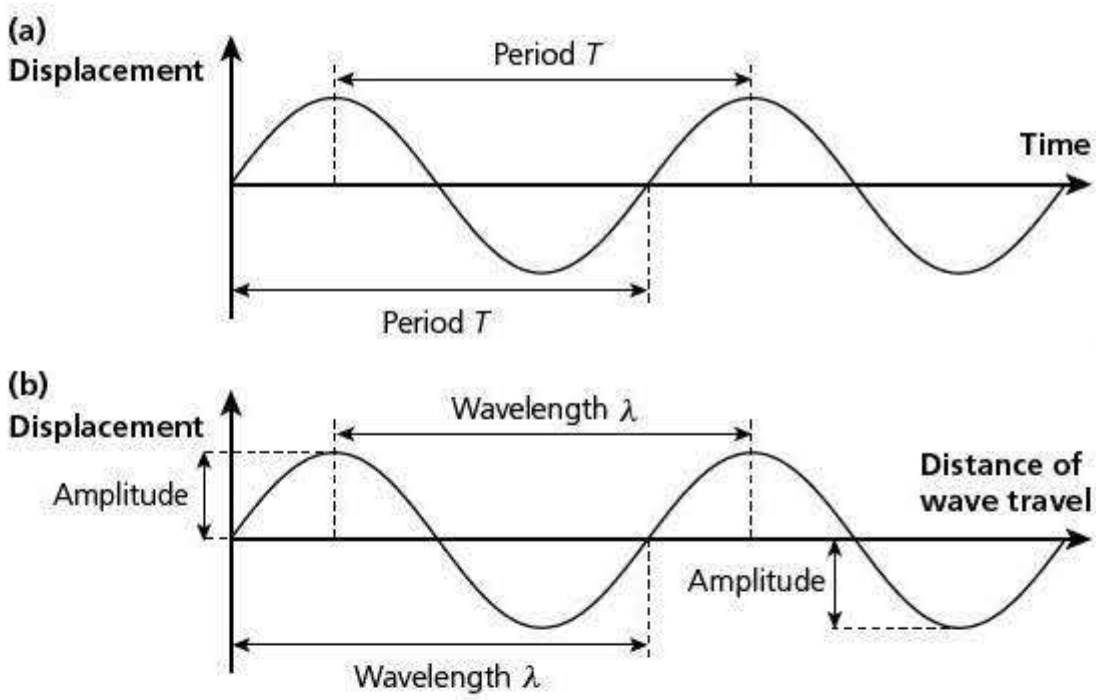

Figure 8.1 (a) Displacement of a particle in a wave against time, **(b)** displacement of all the particles at a particular moment in time

Typical mistake

It is easy to confuse these two graphs. Check the axes carefully. Figure 8.1(a) describes the variation of displacement with time and Figure 8.1(b) describes the variation of displacement with position along the wave.

Frequency and period are related by the equation:

$$f = \frac{1}{T}$$

The wave equation

Revised

The speed of a particle is given by the equation:

$$\text{speed } (c) = \frac{\text{distance}}{\text{time}}$$

Similarly:

$$\text{wave speed} = \frac{\text{distance travelled by the wave}}{\text{time}}$$

In time T, the period of oscillation, the wave travels one wavelength. Hence:

$$c = \frac{\lambda}{T}$$

but:

$$f = \frac{1}{T}$$

hence:

$$\boldsymbol{c = \lambda f}$$

Worked example

A car horn produces a note of frequency 280 Hz. Sound travels at a speed of 320 m s^{-1}. Calculate the wavelength of the sound.

Answer

$c = f\lambda$

$320 = 280\lambda$

Therefore:

$\lambda = \frac{320}{280} = 1.14 \approx 1.1$ m

Intensity of radiation in a wave

Revised

Progressive waves transfer energy. This can be seen with waves on the sea — energy is picked up from the wind on one side of an ocean and is carried across the ocean and dispersed on the other side, as the wave crashes onto a shore.

Intensity is defined as the energy transmitted per unit time per unit area at right angles to the wave velocity. Energy transmitted per unit time is the power transmitted, so that:

$$\textbf{intensity} = \frac{\textbf{power}}{\textbf{area}}$$

The unit is watts per metre squared (W m^{-2}).

The intensity of a wave is proportional to the square of the amplitude of the wave:

$$\boldsymbol{I \propto x_0^2}$$

This means that if the amplitude is halved, the intensity is decreased by a factor of 2^2.

Worked example

The intensity of light from a small lamp is inversely proportional to the square of the distance of the observer from the lamp, that is $I \propto 1/r^2$. Observer A is 1.0 m from the lamp; observer B is 4.0 m from the lamp. Calculate how the amplitudes of the light waves received by the two observers compare.

Answer

intensity of light at B $= \left(\frac{1}{4}\right)^2 \left(= \frac{1}{16}\right)$ of that at A

intensity $\propto$ amplitude^2

Therefore:

amplitude $\propto \sqrt{\text{intensity}}$

amplitude at B $= \frac{1}{\sqrt{16}}$ of that at A

amplitude at B = ¼ that at A

Expert tip

There are no simple formulae that you can apply here. You need to ensure that you understand the physics and then work through in a logical fashion.

Transverse and longitudinal waves

In mechanical waves, particles oscillate about fixed points. When a wave passes along a rope, the particles of the rope vibrate at right angles to the direction of transfer of energy of the wave. Water waves can also be considered to behave in a similar manner. This type of wave is called a **transverse wave** (see Figure 8.2).

In a **transverse wave** the particles vibrate at right angles to the direction of transfer of energy.

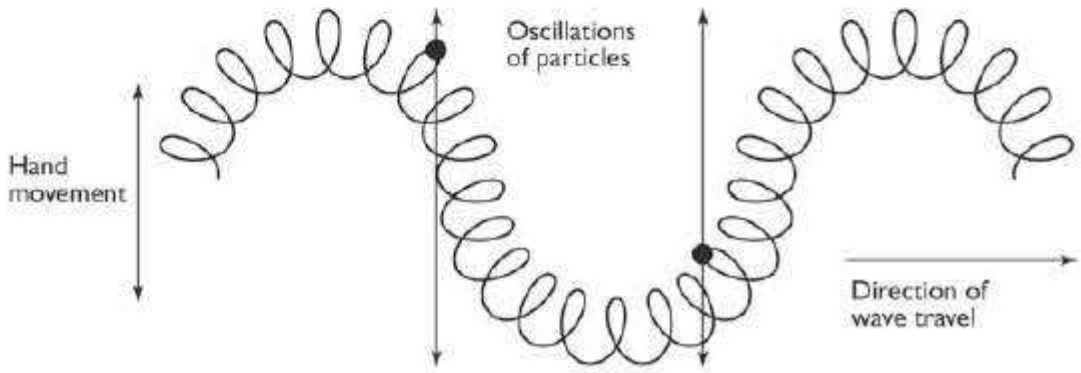

Figure 8.2 Transverse wave

Sound waves are rather different. The particles vibrate back and forth parallel to the direction of transfer of energy of the wave. This forms areas where the particles are compressed together (**compressions**) and areas where they are spaced further apart than normal (**rarefactions**). This type of wave is called a **longitudinal wave** (Figure 8.3).

In a **longitudinal wave** the particles vibrate parallel to the direction of transfer of energy.

In a **compression** the particles are closer together than normal.

In a **rarefaction** the particles are further apart than normal.

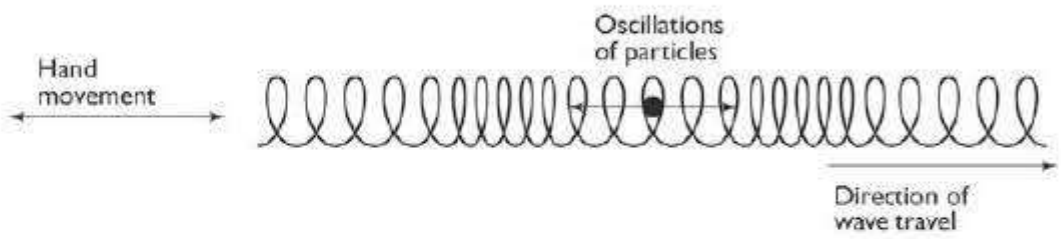

Figure 8.3 Longitudinal wave

Determination of frequency and wavelength of sound waves

The frequency of a sound wave can be measured using a cathode-ray oscilloscope. The apparatus for this experiment is shown in Figure 8.4.

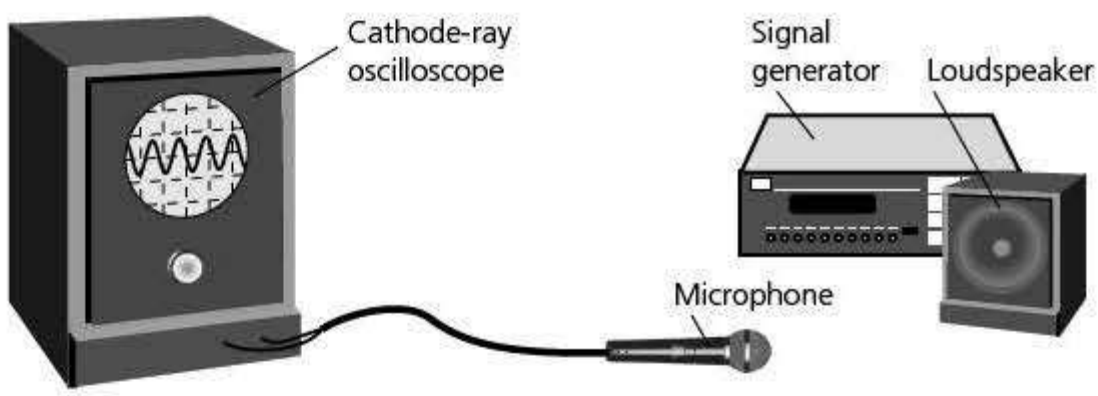

Figure 8.4 Measuring the frequency of a sound wave

The period of the wave can be determined from the time-base setting and the number of waves shown on the screen (frequency = 1/period).

The measurement of wavelength of sound waves is discussed on page 56.

Worked example

In Figure 8.4, the time base is set at $5\,\text{ms div}^{-1}$. Calculate the frequency of the wave.

Answer

In four divisions there are 3.5 waves.

Therefore, in $4 \times 5\,\text{ms}$ (= 20 ms) there are 3.5 waves.

Therefore:

$$\text{period (time for 1 wave)} = \frac{20}{3.5}\,\text{ms} = 5.7 \times 10^{-3}\,\text{s}$$

$$f = \frac{1}{T} = \frac{1}{5.7} = 175\,\text{Hz}$$

Expert tip

Use as much of the screen as possible to reduce uncertainties.

One wavelength is from one peak (or one trough) to the next peak (or trough).

The Doppler effect

Listen to the pitch of a police siren as a police car approaches and passes you. You will observe that on approach the pitch is higher than when the car is stationary, and on leaving you the pitch is lower. This is known as the **Doppler effect**.

The **Doppler effect** is the change in frequency of waves due to the relative motion of the wave source and the observer.

Figure 8.5 shows the wave fronts spreading (a) from a stationary source and (b) from a moving source. Notice how the wave fronts from the moving source are much closer in front of the source, giving a shorter wavelength and higher frequency. Behind the source, the waves are further apart than normal, giving a longer wavelength and lower frequency.

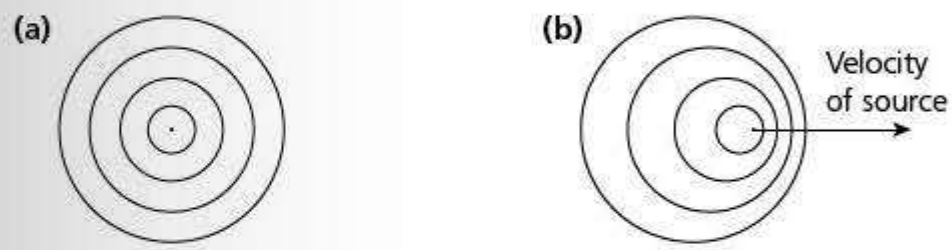

Figure 8.5 (a) Waves spreading out from a stationary source; **(b)** waves spreading out from a moving source

The relationship between the observed frequency and the source frequency is given by the formula:

$$f_o = \frac{f_s v}{v \pm v_s}$$

where f_o is the observed frequency, f_s is the source frequency, v is the velocity of the waves and v_s is the relative velocity of the source and observer.

Expert tip

If the source and the observer are moving towards each other, the frequency increases and a minus sign is used in the denominator of the equation. If the source and observer are moving apart, a plus sign is used, leading to lower frequency.

Worked example

A loudspeaker connected to a signal generator produces a steady note of frequency 256 Hz. An observer moves towards the loudspeaker at a speed of $25\,\text{m s}^{-1}$. Calculate the frequency of the sound that the observer hears (speed of sound = $330\,\text{m s}^{-1}$).

Answer

$$f_o = \frac{f_s v}{v \pm v_s} = \frac{256 \times 330}{330 - 25} = 277\,\text{Hz}$$

Expert tip

All waves, not just sound waves, exhibit the Doppler effect. The electromagnetic radiation from galaxies shows a decrease in the frequencies in their spectra — known as the red shift. The fainter the galaxy the greater the Doppler shift, which suggests that the further away a galaxy is, the faster it is moving away from the Earth. This gives us evidence for the expansion of the Universe.

Electromagnetic spectrum

You have met the idea of energy being transferred by giving out and receiving radiation. This radiation consists of electromagnetic waves. The waves described earlier are caused by the vibration of atoms or molecules. Electromagnetic waves are quite different — they are produced by the repeated variations in electric and magnetic fields. Electromagnetic waves have the amazing property of being able to travel through a vacuum. You see light (a form of electromagnetic wave) that has travelled through billions of kilometres of empty space from distant stars.

Electromagnetic radiation comes at many different frequencies. Table 8.1 lists different types of electromagnetic radiation and their approximate wavelengths in a vacuum.

Table 8.1 Types of electromagnetic radiation

Type of radiation	Approximate range of wavelength in a vacuum/m	Properties and uses
Gamma	10^{-16} to 10^{-11}	Produced by the disintegration of atomic nuclei; very penetrating, causes ionisation, affects living tissue
X-radiation	10^{-13} to 10^{-9}	Produced from rapidly decelerated electrons; properties similar to gamma-rays, the only real difference is in their method of production
Ultraviolet	10^{-9} to 4×10^{-7}	Ionising radiation, affects living tissue, stimulates the production of vitamin D in mammals
Visible light	4×10^{-7} to 7×10^{-7}	Stimulates light-sensitive cells on the retina of the human (and other animals) eye
Infrared	7×10^{-7} to 10^{-3}	Has a heating effect and is used for heating homes and cooking
Microwaves	10^{-3} to 10^{-1}	Used in microwave cooking where it causes water molecules to resonate; also used in telecommunications, including mobile telephones
Radio waves	10^{-1} to 10^{5}	Used in telecommunications

It is important to recognise that there are no sharp boundaries between these types of radiation. The properties gradually change as the wavelength changes. For example, it is not possible to give a precise wavelength at which radiation is no longer ultraviolet and becomes X-radiation.

One property that these radiations have in common is that they all travel at the same speed in a vacuum — a speed of $3.0 \times 10^{8}\,\mathrm{m\,s^{-1}}$. Consequently, if you know a radiation's frequency, you can calculate its wavelength in a vacuum.

Worked example

The shortest wavelength that the average human eye can detect is approximately 4×10^{-7} m, which lies at the violet end of the spectrum. Calculate the frequency of this light.

Answer

$$c = f\lambda$$

Therefore:

$$f = \frac{c}{\lambda}$$

So:

$$f = \frac{3.0 \times 10^{-8}}{4 \times 10^{-7}} = 7.5 \times 10^{14}\,\mathrm{Hz}$$

Revision activity

- List the key terms in this chapter on pieces of card. Write out the meaning of each key term on separate pieces of card. Shuffle the two sets of cards and then try to match each key term with its definition.
- Add the following 'must-learn' equations to your list:

$$f = \frac{1}{t}$$

$$c = f\lambda$$

$$\text{intensity} = \frac{\text{power}}{\text{area}}$$

Now test yourself

Tested

1 **a** A spectral line in the sodium spectrum has a frequency of 5.08×10^{14} Hz. Calculate the wavelength of the light. (Speed of light in a vacuum = $3.00 \times 10^{8}\,\text{m s}^{-1}$.)

b Suggest the colour of this light.

2 The time base of a cathode-ray oscilloscope is set at $5\,\text{ms div}^{-1}$. A student observes that 2.5 waves cover 4 complete divisions. Calculate the frequency of the sound.

3 When studying light from a distant galaxy, a scientist observes that the frequency of the spectral line in Question 1 has a Doppler shift of -0.42×10^{14} Hz. Calculate the speed at which the galaxy is moving away from Earth.

Answers on p.215

9 Superposition

Stationary waves

To understand the formation of stationary waves, you need to understand the **principle of superposition**.

The **principle of superposition** states that when two or more waves meet at a point, the resultant displacement at that point is equal to the algebraic sum of the individual waves at that point.

Phase difference

Revised

Moving along a progressive wave, the vibrating particles are slightly out of step with each other — there is a **phase difference** between them (Figure 9.1).

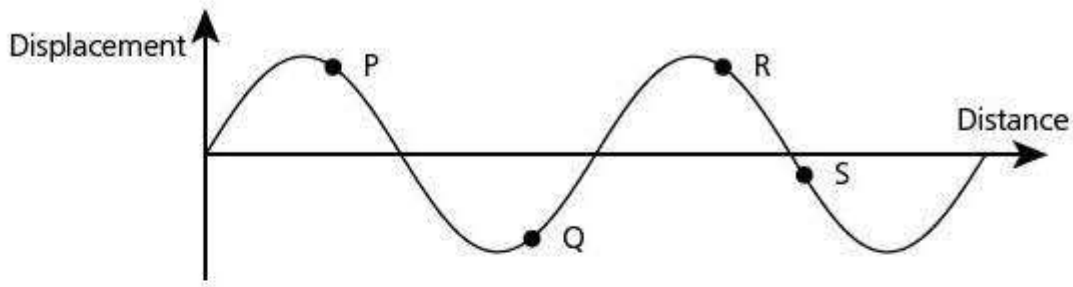

Figure 9.1 Phase difference

Study Table 9.1, which describes the phase relationships between the different points on the wave in Figure 9.1.

Table 9.1 Phase relationships

Points	Phase difference/ degrees	Phase difference/ radians	Common terms used to describe the phase difference
P and R	360 or 0	2π or 0	In phase
P and Q	180	π	Exactly out of phase (antiphase)
R and S	90	$\frac{1}{2}\pi$	90° or $\frac{1}{2}\pi$ out of phase

Phase difference also describes how two sets of waves compare with each other. Figure 9.2 shows two sets of waves that are approximately 45° ($\frac{1}{4}\pi$) out of phase. Phase difference is measured in degrees in AS work. You will meet radian measurements in Topic 14 (page 97).

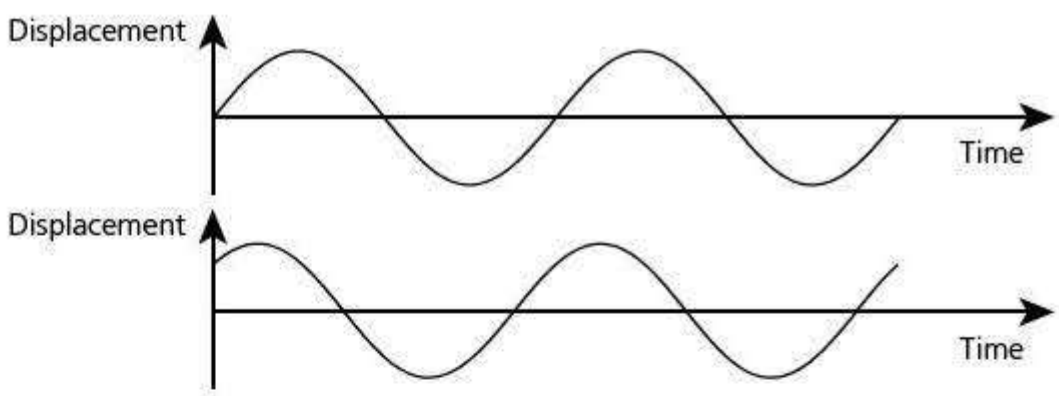

Figure 9.2

The formation of a stationary wave requires two waves of the same type and frequency travelling in opposite directions to meet. Superposition can then

occur. When the two waves are exactly in phase they will reinforce to give maximum displacement. When they are exactly out of phase (180°) they will subtract, giving minimum displacement. When the phase difference is not 0° or 180°, the resultant displacement will vary according to the exact phase difference of the two waves.

Stationary waves in stretched strings

Revised

If you pluck a stretched string at its centre, it vibrates at a definite frequency, as shown in Figure 9.3.

This is an example of a stationary wave. It is produced by the initial wave travelling along the string and reflecting at the ends. It will die away because energy is lost to the surroundings, for example by hitting air molecules and producing a sound wave. This wave, where there is just a single loop, is called the **fundamental** wave or the **first harmonic**. Its wavelength is twice the length of the string.

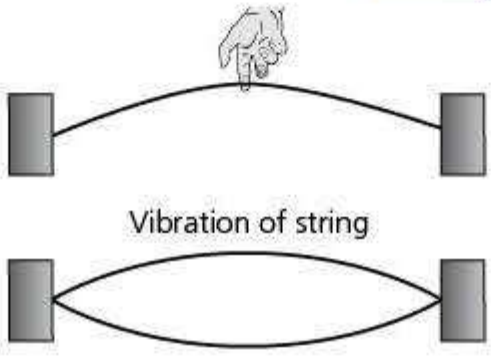

Figure 9.3 Fundamental wave, or first harmonic

A different stationary wave can be set up by plucking the string at points A and B (Figure 9.4). Note that the midpoint of the string has zero amplitude. This point is called a **node**. The points of maximum amplitude are called **antinodes**.

The frequency of this wave is twice that of the previous wave and its wavelength is half that of the fundamental. It is called the second harmonic.

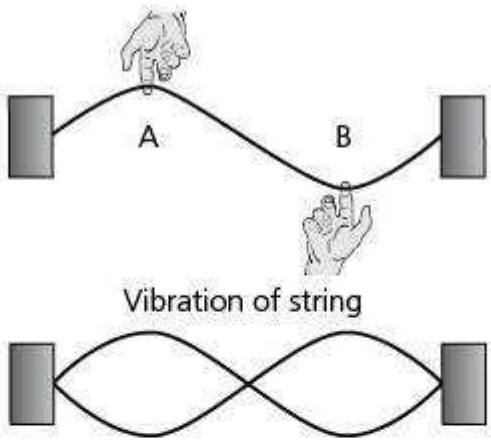

Figure 9.4 Second harmonic

These waves die away quickly as energy is transferred to the surroundings. They can be kept going by feeding energy into the system (Figure 9.5).

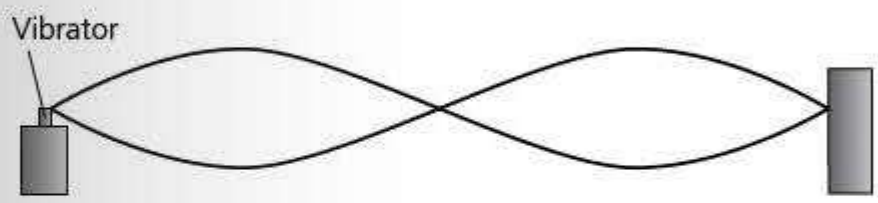

Figure 9.5 A vibrator feeds energy into the system

Varying the frequency of the vibrator produces a whole series of harmonics. The first three are shown in Figure 9.6. Each harmonic consists of a whole number of half wavelengths.

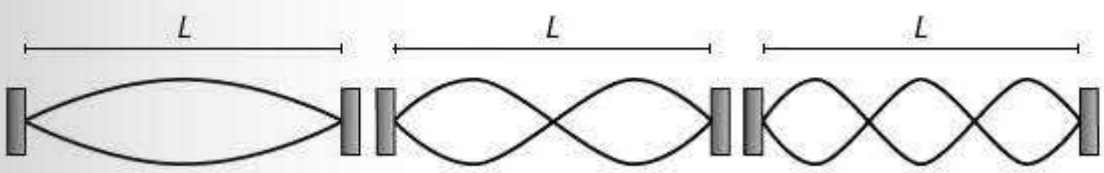

Figure 9.6 A series of harmonics

Typical mistake

Remember that the distance between adjacent nodes, or between adjacent antinodes, is half a wavelength, *not* a full wavelength.

Stationary waves in air columns

Revised

Sound waves can produce stationary waves in air columns. A small loudspeaker or a tuning fork is used to feed energy into the system (Figure 9.7).

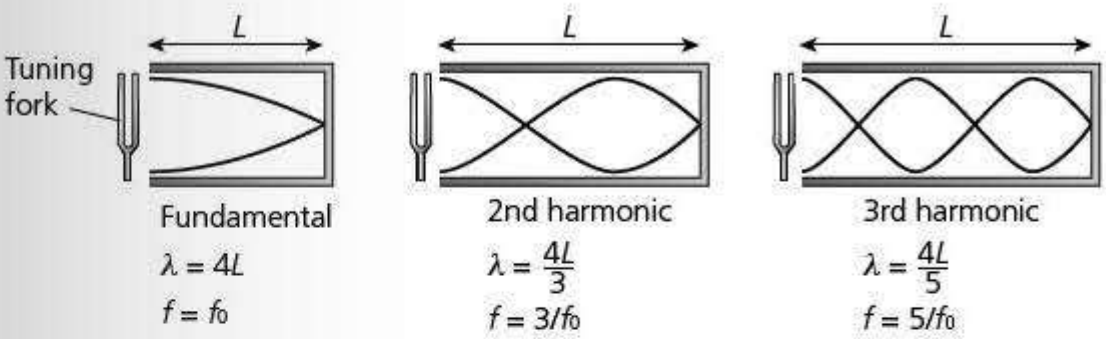

Figure 9.7

Typical mistake

The diagrams with sound waves are graphical representations showing displacement against position along the tube. Students often interpret them as showing a transverse wave. Sound waves are longitudinal, so the displacement is parallel to the length of the tube *not*, as the diagrams can suggest, perpendicular to it.

Differences between stationary waves and progressive waves

Some differences between stationary and progressive waves are given in Table 9.2.

Table 9.2

Stationary waves	Progressive waves
Energy is stored in the vibrating particles	Energy is transferred from one place to another
All the points between successive nodes are in phase	All the points over one wavelength have different phases
The amplitudes of different points vary from a maximum to zero	All the points along the wave have the same amplitude

Measurement of the speed of sound

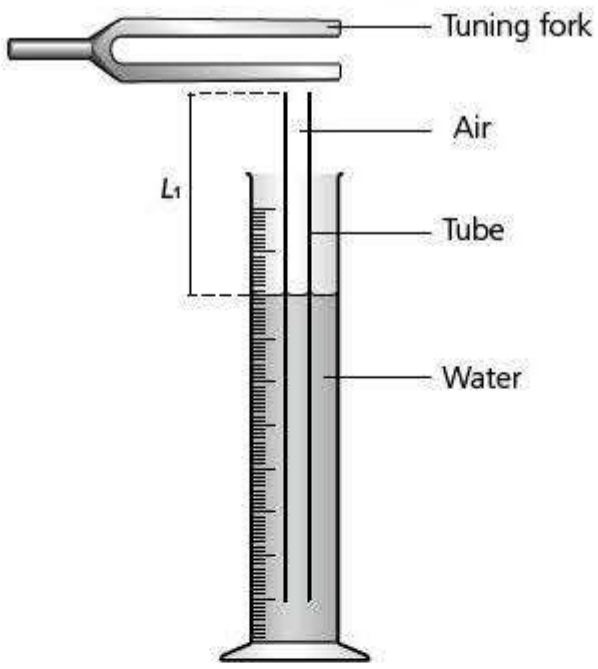

Figure 9.8 Measuring the speed of sound

Apparatus for measuring the speed of sound is shown in Figure 9.8. The height of the tube is adjusted until the fundamental stationary wave is formed. This can be identified by a clear increase in the loudness of the sound produced. The length L_1 is measured. The tube is then moved upwards until the next stationary wave is formed and the new length L_2 is measured. The wavelength is equal to $2(L_2 - L_1)$. If the frequency of the tuning fork is known, the speed of the sound in the air column can be calculated using the wave equation, $c = f\lambda$.

Expert tip

The antinode at the top of the tube is just beyond the top of the tube. This means that an end correction has to be allowed for. Subtracting the two readings eliminates the end correction.

Worked example

A tuning fork of frequency 288 Hz produces a stationary wave when a tube of air is 28.5 cm long. The length of the tube is gradually increased and the next stationary wave is formed when the tube is 84.0 cm long. Calculate the speed of sound in the tube.

Answer

$\frac{1}{2}\lambda = (84.0 - 28.5) = 55.5\,\text{cm}$

$\lambda = 111\,\text{cm} = 1.11\,\text{m}$

$c = f\lambda = 288 \times 1.11 = 320\,\text{m s}^{-1}$

Diffraction

When waves pass through an aperture they tend to spread out. Similarly, if waves go round an object they tend to spread round it. Figure 9.9 shows **wavefronts** passing through a narrow slit and through a wide slit, and round an object. This is called diffraction.

A **wavefront** is an imaginary line on a wave that joins points that are exactly in phase.

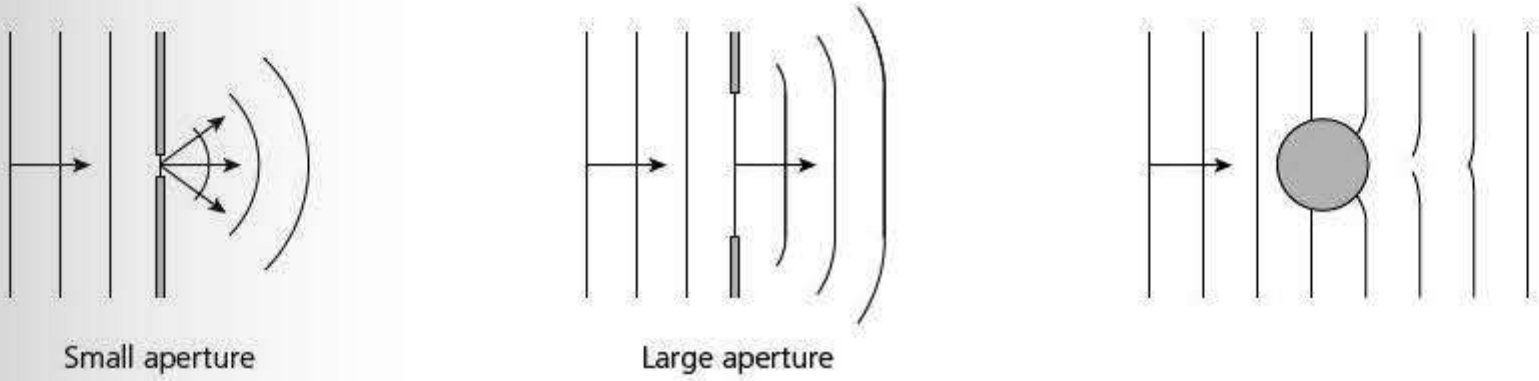

Figure 9.9 Wave diffraction

Interference

Interference and coherence

Revised

When two sets of waves of the same type meet, their displacements add or subtract in a similar way to vectors. At its most simple, if the two sets of waves are exactly in phase, the combined wave has an amplitude equal to the sum of the two amplitudes. This is known as **constructive interference** (see Figure 9.10).

If the two sets of waves are 180° out of phase (in **antiphase**) the two waves will subtract. This is known as **destructive interference**. If the original amplitudes are equal there will be no disturbance. Interference is an example of superposition.

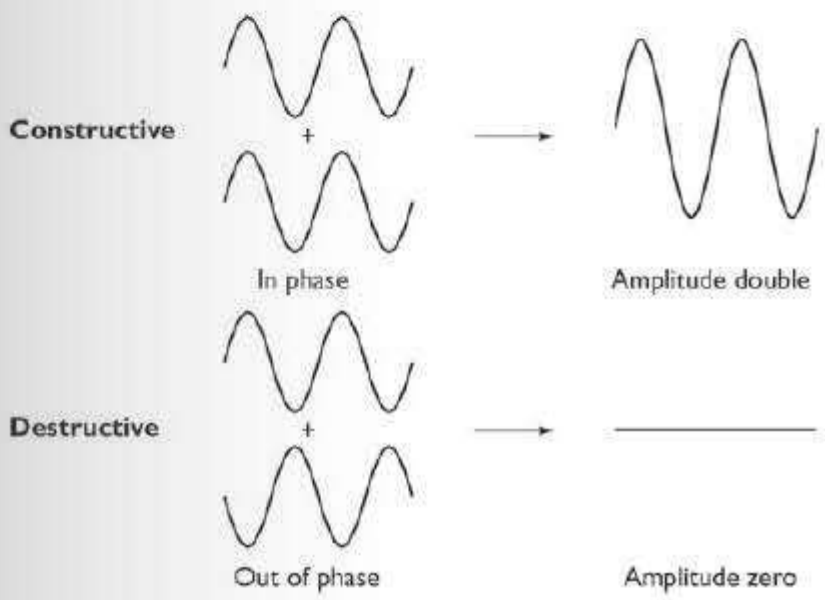

Figure 9.10 Constructive and destructive interference

For interference to occur, two **coherent** sources of waves are required.

For sources to be **coherent** the waves must have the same frequency and have a constant phase difference.

Interference of sound

Revised

Interference of sound waves can be demonstrated using two loudspeakers driven by the same signal generator giving coherent waves (Figure 9.11).

Figure 9.11

- A loud sound is heard at A as waves from the two loudspeakers have travelled equal distances and are in phase. Therefore, the waves interfere constructively.
- A quiet sound is heard at B as waves from the upper loudspeaker have travelled half a wavelength further than waves from the lower speaker. Consequently, the waves are in antiphase, so they interfere destructively.
- A loud sound is heard at C as waves from the upper loudspeaker have travelled a full wavelength further than waves from the lower speaker. The waves are now in phase and so interfere constructively.
- A quiet sound is heard at D as waves from the upper loudspeaker have travelled one-and-a-half wavelengths further than waves from the lower speaker. The waves are now in antiphase, so interfere destructively.

Interference of water waves

Revised

Water waves can be shown interfering by using a ripple tank (Figure 9.12). The areas of calm water (destructive interference) and rough water (constructive interference) can be viewed on the shadow image formed on the ceiling. Alternatively, they can be seen directly by looking almost parallel to the surface of the water.

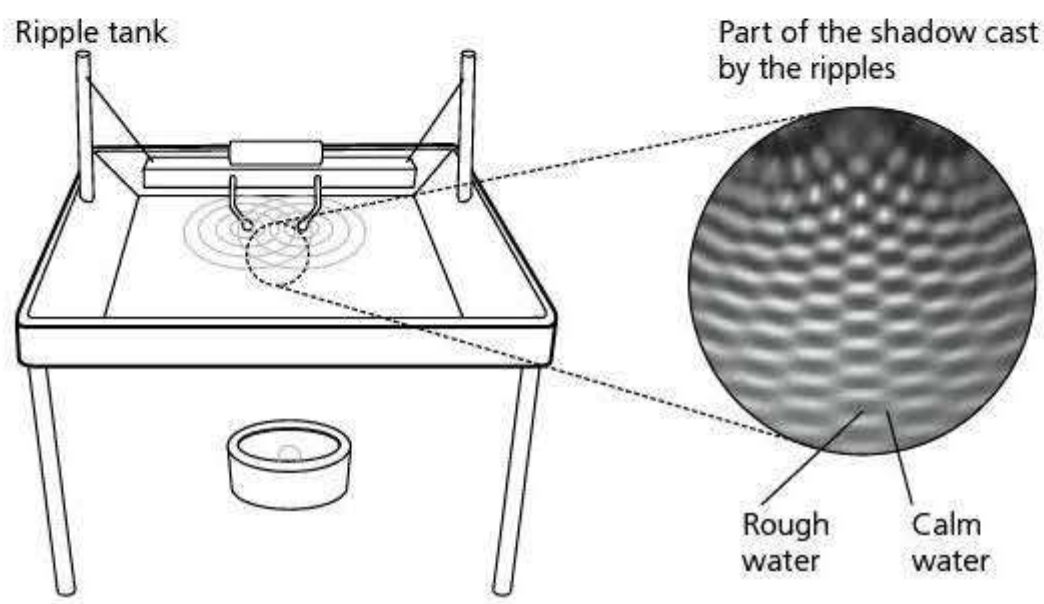

Figure 9.12

Interference of light

Revised

Early attempts to demonstrate interference of light were doomed to failure because separate light sources were used. A lamp does not produce a continuous train of waves — it produces a series of short trains. The phase difference between one train and the next is random (Figure 9.13). Hence, if light from two separate sources is mixed, they are not coherent, there is no continuing relationship between the phases and an 'average brightness' is observed.

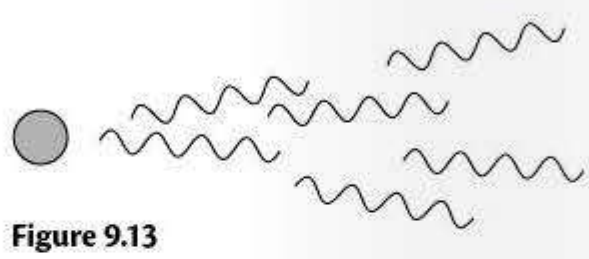

Figure 9.13

To successfully demonstrate interference, light from a single monochromatic source of light must be split and then recombined, with the two parts travelling slightly different distances (Figure 9.14).

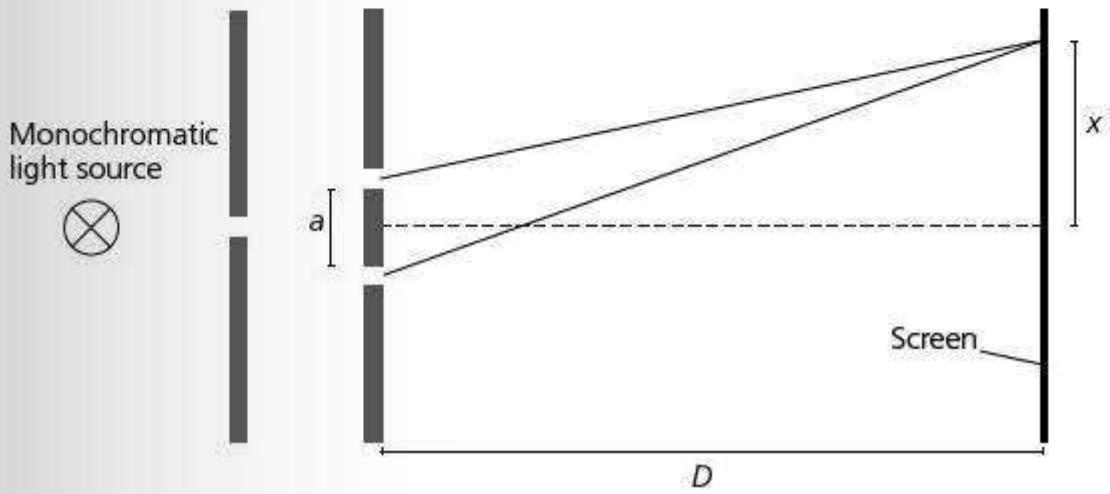

Figure 9.14 Demonstrating interference using light from a single monochromatic source

The wavelength of light is very short (~10^{-7} m). Consequently, the distance a between the slits must be small (<1 mm) and the distance D from the slits to the screen must be large (≈1 m).

For constructive interference the path difference between the contributions from the two slits is ax/D, where x is the distance between adjacent bright fringes.

So:

$$\lambda = \frac{ax}{D}$$

Worked example

Light of wavelength 590 nm is incident on a pair of narrow slits. An interference pattern is observed on a screen 1.5 m away. A student observes and measures 12 interference fringes, over a distance of 2.1 cm. Calculate the separation of the two slits.

Answer

$$\lambda = \frac{ax}{D}$$

$$x = \frac{2.1}{12}\text{cm} = 0.175\text{ cm} = 1.75 \times 10^{-3}\text{ m}$$

$$590 \times 10^{-9} = \frac{a \times 1.75 \times 10^{-3}}{1.5}$$

$$a = \frac{590 \times 10^{-9} \times 1.5}{1.75 \times 10^{-3}} = 5.1 \times 10^{-4}\text{ m}$$

Note that the colour of light is dependent on its frequency. In general, for coherence we expect a single frequency, and therefore single wavelength. In practice, when using white light (a whole range of colours) a few coloured fringes can be observed as the different wavelengths interfere constructively and destructively in different places.

Diffraction grating: multislit interference

Revised

The effect of using more than two slits to produce an interference pattern is to make the maxima sharper and brighter. The more slits there are, the sharper and brighter are the maxima. This makes it much easier to measure the distance between maxima.

The path difference between contributions from successive slits is $d \sin \theta$, where d is the distance between successive slits. Hence for a maximum:

$$n\lambda = d \sin \theta$$

where n is a whole number. The first maximum ($n = 1$) is sometimes called the first order (Figure 9.15).

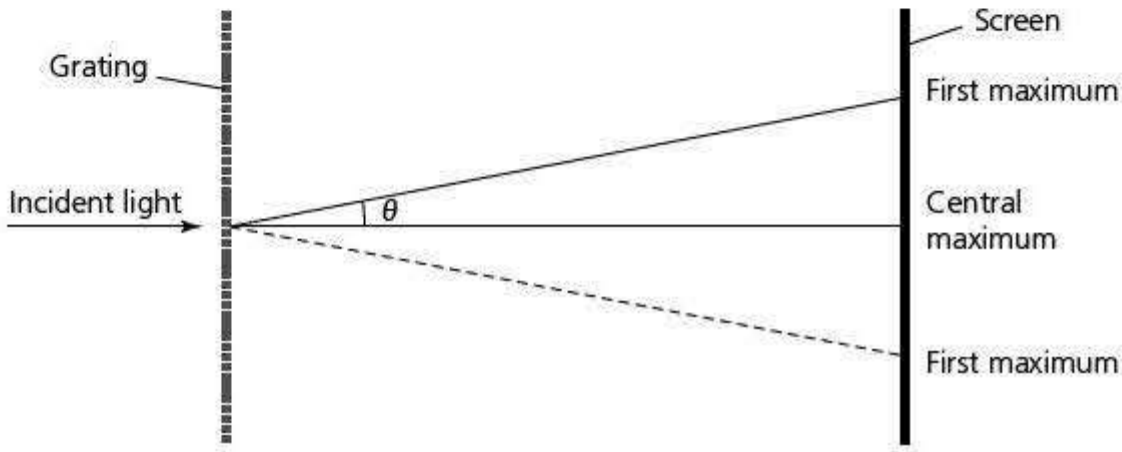

Figure 9.15

Typical mistake

The multislit device is called a diffraction grating, which is rather confusing. Although the spreading of the light (diffraction) is required for interference, this is really an interference grating.

Worked example

Calculate the angles at which the first and second maxima are formed when a monochromatic light of wavelength 7.2×10^{-7} m is shone perpendicularly onto a grating with 5000 lines per cm.

Answer

$$d = \frac{1}{5000}\text{cm} = 2 \times 10^{-4}\text{cm} = 2 \times 10^{-6}\text{m}$$

For the first maximum:

$$\lambda = d \sin \theta$$

$$\sin \theta = \frac{\lambda}{d} = \frac{7.2 \times 10^{-7}}{2 \times 10^{-6}} = 0.36$$

$$\theta = 21°$$

For the second maximum:

$$2\lambda = d \sin \theta$$

$$\sin \theta = \frac{\lambda}{d} = \frac{2 \times 7.2 \times 10^{-7}}{2 \times 10^{-6}} = 0.72$$

$$\theta = 46°$$

Revision activities

- Add the following 'must-learn' equations to your list:

  $$\lambda = \frac{ax}{D}$$

  $$n\lambda = d \sin \theta$$

- Write down all the equations in this chapter and relate them to the situation in which they are used. For example, $n\lambda = d \sin \theta$ is used in multiple-slit diffraction.

Now test yourself

Tested

1 A tuning fork of frequency 216 Hz is struck and held above the open end of a resonance tube. The first resonance peak is produced when the tube length is adjusted to 361 mm. The second resonance peak is found when the tube has a length of 1065 mm. Calculate the speed of sound.

2 Laser light of wavelength 829 nm is incident on a pair of narrow slits. An interference pattern is observed on a screen 2.50 m away. The distance between the central and the 20th interference fringes is 12 cm. Calculate the separation of the slits.

3 A diffraction grating has 12 500 lines per centimetre. When monochromatic light is shone on the grating the first maximum is found to be at an angle of 30° to the central maximum. Calculate the wavelength of the light.

Answers on p.215

10 Electric fields

Concept of an electric field

An electric field is a region in which charged bodies experience a force.

$$\text{electric field strength} = \frac{\text{force}}{\text{charge}}$$

which can be written:

$$E = \frac{F}{Q}$$

The unit of electric field strength is newtons per coulomb ($N\,C^{-1}$).

Electric field strength is the force per unit positive charge on a stationary point charge.

Field lines

Revised

We can represent the shape of an electric field by drawing lines of force (Figure 10.1). In an electric field the lines represent the direction of the force on a small positive test charge. When drawing an electric field:

- the direction of electric field lines is away from positive charges and towards negative charges
- the closer the field lines, the stronger the field strength
- the field lines never touch nor cross

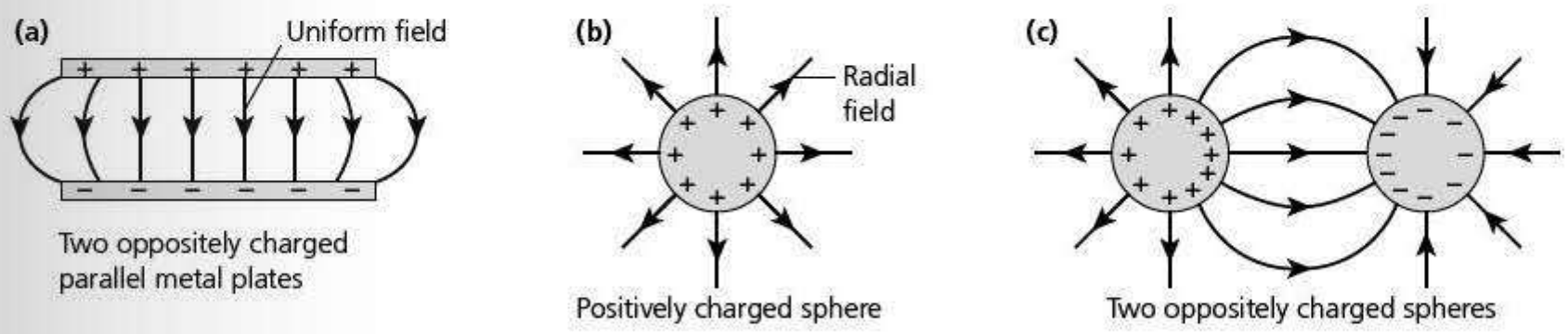

Figure 10.1 Shapes of electric fields

Uniform electric fields

You can see from Figure 10.1(a) that once we get away from the edges of the plates, the field between two parallel plates is uniform. This means that wherever a charged particle is placed between those plates it experiences the same magnitude of force, in the same direction.

Calculating forces on charges

Revised

The electric field strength between the plates is given by the formula:

$$E = \frac{V}{d}$$

where V is the potential difference and d is the distance between the plates. Note that this means that an alternative way of expressing the unit for electric field strength ($N\,C^{-1}$) is volts per metre ($V\,m^{-1}$).

Worked example

A piece of dust carries a charge of -4.8×10^{-18} C, and lies at rest between two parallel plates separated by a distance of 1.5 cm. Calculate the force on the charge when a potential difference of 4500 V is applied across the plates.

Answer

$E = \frac{V}{d} = \frac{4500}{1.5 \times 10^{-2}} = 300\,000\ \text{V m}^{-1}$

$E = \frac{F}{Q}$

So $F = E \times Q$

$= 300\,000 \times (-4.8) \times 10^{-18}$

$= 1.44 \times 10^{-12}$ N

Typical mistake

It is often thought that the force on a positively charged particle between two parallel, charged plates is stronger when nearer one of the plates than when it is midway between the plates. This is incorrect — indeed it contradicts the idea of a uniform field. The force on the charged particle is the same wherever it is between the two plates.

Effect of electric fields on the motion of charged particles

Revised

A charged particle in an electric field experiences a force and therefore tends to accelerate. If the particle is stationary or if the field is parallel to the motion of the particle, the magnitude of the velocity will change. An example is when electrons are accelerated from the cathode towards the anode in a cathode-ray tube (Figure 10.2).

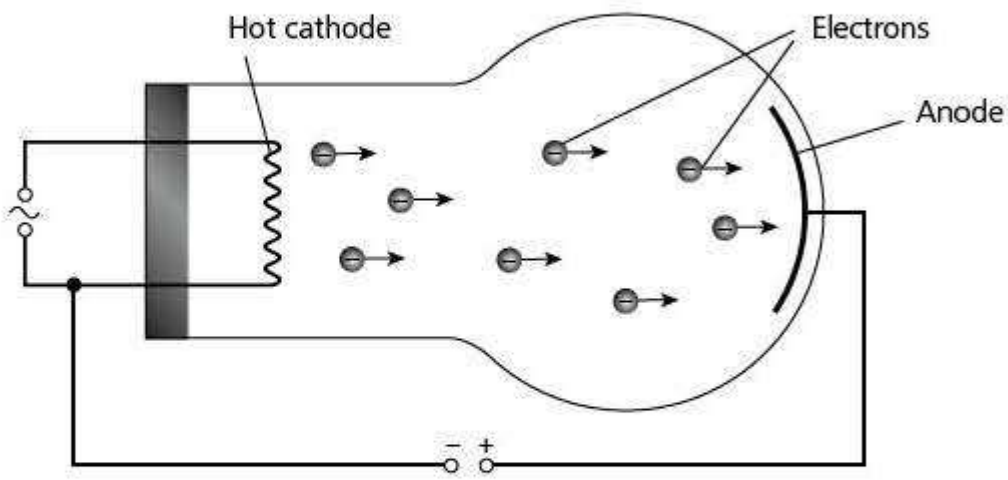

Figure 10.2 Principle of a cathode-ray tube

If the field is at right angles to the velocity of the charged particles, the direction of the motion of the particles will be changed. The path described by the charged particles will be parabolic (Figure 10.3), the same shape as a projectile in a uniform gravitational field. The component of the velocity perpendicular to the field is unchanged; the component parallel to the field increases uniformly.

The constant force on the charged particle leads to it describing a parabolic path. This path is similar to that of a ball thrown horizontally in a uniform gravitational field.

Revision activity

- Add the following 'must-learn' equations to your list:

$E = \frac{F}{Q}$

$E = \frac{V}{d}$

Figure 10.3 The path of a proton as it passes through a uniform electric field

Now test yourself

Tested

1 Calculate the force on an electron when it is in an electric field of field strength 14 kN C^{-1} (the charge on an electron e is 1.6×10^{-19} C).

2 There is a potential difference of 5.0 kV across two parallel plates that are 2.0 cm apart. Calculate the electric field strength between the plates.

3 State the effect on the electric field strength in question 2 of:

a using plates of two times the area of the original plates

b moving one of the plates so that their separation is halved

Answers on p.215

11 Current of electricity

Electric current

Terminology

Revised

It is important to be clear about the meanings of the different terms used in electricity (Table 11.1).

Table 11.1 Terms used in electricity

Quantity	Meaning	Unit and symbol
Current (I)	Movement of electric charge	ampere (A)
Charge (Q)	'Bits' of electricity*	coulomb (C)
Potential difference (V)	Work done in moving a unit positive charge from one place to another place	volt (V)
Resistance (R)	The opposition to current, defined as potential difference/current	ohm (Ω)

*This is not a formal definition of charge. The concept of the nature of charge is quite complex. It can only be explained fully in terms of the interactions between charges and between charges and electric fields. However the reality is not that different. The smallest charge that is encountered is the charge on an electron (-1.6×10^{-19} C). We can consider charge to be 'bitty' in its nature. Physicists describe this as charge being quantised.

charge passing a point = current × time or $Q = It$ for which the current flows

Current and charge carriers

Revised

When a circuit is completed the current is set up in the circuit almost immediately. The current front moves at (or near) the speed of electromagnetic radiation (3×10^8 m s^{-1}). It is a mistake to think that the charge carriers (electrons in a metal) move at this speed. They move quite slowly, in the order 0.1 mm s^{-1}, as they continually collide with ions in the crystal lattice. This is called their **drift velocity**. This can be compared with the high speed with which the wavefront of a longitudinal wave moves and the much smaller speeds at which the individual particles move. At any instant each charge carrier will have a different drift velocity and generally the average drift velocity is considered.

Consider a conductor of cross-section A, through which there is a current I. In the conductor there are n charge carriers per unit volume, each with a charge q and an average drift velocity v. In time t the average distance travelled by each charge carrier = L (Figure 11.1).

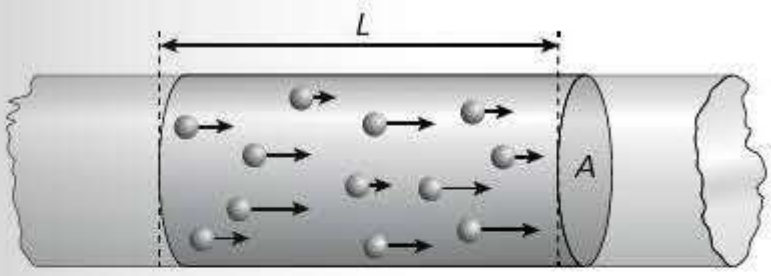

Figure 11.1

Therefore:

$L = vt$

The volume of the shaded section of the conductor = $AL = Avt$.

All the charges (on average) initially in the shaded section of the conductor will pass through the section in time t.

Therefore the total charge passing through the section in time $t = Anvtq$.

$$\text{charge passing per unit time} = \frac{Anvtq}{t} = Anvq$$

charge passing per unit time = current I

So $I = Anvq$

Expert tip

You need to be able to reproduce this proof. Practise going through it a couple of times, looking at the book when needed. Then try to go through without looking at the book. If you get stuck, refer to the book and start again. Keep on trying until you can reproduce it with ease.

Worked example

A copper wire of cross-sectional area $4.0 \times 10^{-6}\,\text{m}^2$ carries a current of 2.5 A. The number of charge carriers per unit volume in copper is 8.4×10^{28}, each carrying a charge of 1.6×10^{-19} C. Calculate the mean drift velocity of the charge carriers.

Answer

$I = Anvq$

$$\text{So } v = \frac{I}{Anq}$$

$$= \frac{2.5}{4.0 \times 10^{-6} \times 8.4 \times 10^{28} \times 1.6 \times 10^{-19}}$$

$$= 4.7 \times 10^{-5}\,\text{m s}^{-1}$$

Potential difference and power

Definitions of electrical units

Revised

Current

The **ampere** is one of the base units described in the first topic of this book. It is defined in terms of the force between two parallel conductors.

Charge

The charge that passes any point in a circuit when a current of 1 ampere flows for 1 second is 1 **coulomb**. This leads to equation 1:

$$q = It \qquad [1]$$

Potential difference

There is a potential difference of 1 **volt** between two points when 1 joule of work is done in moving a charge of 1 coulomb from one point to another. This leads to equation 2, where W is the work done in moving charge Q:

$$V = \frac{W}{Q} \qquad [2]$$

Power

Power was introduced in Topic 6 (Work, energy and power). You should remember that:

- power is defined as the work done, or energy transferred, per unit time
- the unit is the watt (W), which is the power generated when work is done at the rate of 1 joule per second

This leads to equation 3:

$$P = VI \qquad [3]$$

Resistance

A component has a resistance of 1 ohm (Ω) when there is a current of 1 ampere through the component and a potential difference of 1 volt across its ends. This leads to equation 4:

$$R = \frac{V}{I} \qquad [4]$$

Summary of equations

$$q = It$$

$$V = \frac{W}{Q}$$

$$P = VI$$

$$R = \frac{V}{I}$$

The following relationships can be found by substituting the resistance equation into the power equation:

$$P = \frac{V^2}{R}$$

and

$$P = I^2R$$

Worked example

A water heater of resistance 60 Ω runs from a mains supply of 230 V. It can raise the temperature of a tank of water from 20 °C to 45 °C in 20 minutes. Calculate:

(a) the charge that passes through the heater

(b) the energy dissipated by the heater

Answer

(a) $R = \frac{V}{I}$,

which leads to $I = \frac{V}{R} = \frac{230}{60} = 3.83\,\text{A}$

$Q = It = 3.83 \times 20 \times 60 = 4600\,\text{C}$

(b) $V = \frac{W}{Q}$

which leads to:

$W = VQ = 230 \times 4600 = 1\,058\,000\,\text{J} \approx 1.1\,\text{MJ}$

Expert tip

The information about the temperature rise of the water is irrelevant to the question. One skill you need to develop is selecting relevant information and rejecting that which is not relevant.

Resistance and resistivity

I–V characteristics

Revised

Different components behave in different ways when there is a potential difference across them. Examples are shown in Table 11.2.

Table 11.2 IV characteristics of various components

Component	Description		Explanation
Metal wire	The current is proportional to the potential difference across it. The resistance is the same for all currents. The resistance of the wire is equal to the inverse of the gradient.	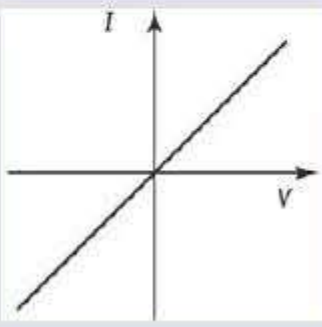	Metals contain many free electrons. These carry the current. The greater the potential difference, the faster the drift velocity of these electrons.
Filament lamp	At low currents, the current is proportional to the potential difference. At higher currents, the current does not increase as much for the same voltage increase. The resistance increases at higher currents.	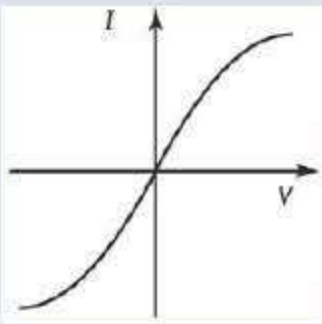	Lamp filaments are made from tungsten metal. At low currents, the filament behaves in the same way as the wire. At higher currents, the temperature increases to around 1500°C, the vibrations of the ions in the crystal lattice increase, presenting a larger collision cross-section and reducing the drift velocity of the electrons.
Thermistor	At low currents, the current is proportional to the potential difference. At higher currents, the current increases more for the same voltage increase. The resistance decreases at higher currents.	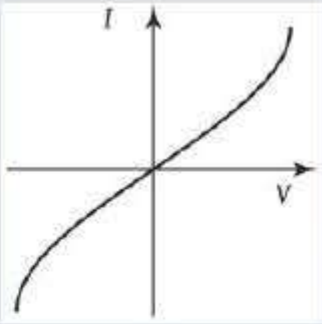	Like the metal wire, for low currents the potential difference is roughly proportional to the current, but when the temperature increases the resistance decreases. Thermistors are semiconductors. Conduction in semiconductors is different from in metals. There are fewer free electrons. Increasing the temperature frees more electrons to carry the current and thus reduces the resistance.
Diode	No current will pass in one direction. Once the potential difference (in the opposite direction) reaches a set value (0.6 V for a silicon diode) it conducts with very little resistance.	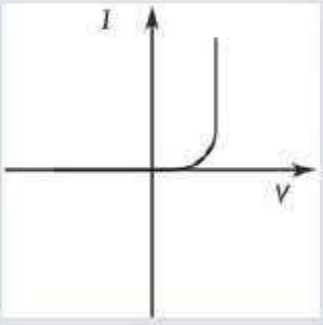	Diodes are also semiconductors but they are designed to allow currents to pass in one direction only.

Expert tip

For a filament lamp, a thermistor and a diode, the resistance of the component is *not* equal to the inverse of the gradient. It is equal to the potential difference divided by the current when that p.d. is across the component.

Ohm's law

Revised

The special case of conduction through a metal is summed up in **Ohm's law**:

> The current through a metallic conductor is proportional to the potential difference across the conductor provided the temperature remains constant.

Resistivity

Revised

The resistance of a component describes how well (or badly) a particular component or metal wire conducts electricity. It is often useful to describe the behaviour of a material; to do this we use the idea of **resistivity**.

The **resistance** of a wire is:

- directly proportional to its length, $R \propto L$
- inversely proportional to the cross-sectional area: $R \propto \frac{1}{A}$

So:

$$R \propto \frac{L}{A}$$

Hence:

$$R = \frac{\rho L}{A}$$

where ρ is the constant of proportionality, which is called the resistivity.

The units of resistivity are Ω m:

$$\rho = \frac{RA}{L} \rightarrow \frac{\Omega\,\text{m}^2}{\text{m}} = \Omega\,\text{m}$$

Worked example

A student wants to make a heating coil that will have a power output of 48 W when there is a potential difference of 12 V across it. The student has a reel of nichrome wire of diameter 0.24 mm. The resistivity of nichrome is $1.3 \times 10^{-8}\,\Omega$ m. Calculate the length of wire that the student requires.

Answer

The resistance of the coil can be calculated using the equation:

$$P = \frac{V^2}{R}$$

$$R = \frac{V^2}{P} = \frac{12^2}{48} = \frac{144}{48} = 3.0\,\Omega$$

Now, $R = \frac{\rho L}{A}$

and $A = \pi\left(\frac{d}{2}\right)^2$

$$= \pi\left(\frac{24 \times 10^{-3}}{2}\right)^2 = 4.52 \times 10^{-8}\,\text{m}^2$$

$$R = \frac{\rho L}{A} \rightarrow R = \frac{RA}{P} = \frac{3.0 \times 4.52 \times 10^{-8}}{1.3 \times 10^{-8}} = 10.4\,\text{m}$$

Revision activities

- Make a flow chart to show how the units and/or dimensions of the following quantities are linked:

  charge current length
  potential difference power
  resistance resistivity time

- Add the following 'must-learn' equations to your list:

  $q = It$

  $P = VI$

  $V = \frac{W}{Q}$

  $R = \frac{V}{I}$

  $R = \frac{\rho L}{A}$

Now test yourself

Tested

1 A cell of 6.0 V and negligible internal resistance is connected across a resistor of resistance 4.0 Ω. Calculate:
   a the current through the resistor
   b the power dissipated in the resistor
   c the charge passing through the resistor in 15 minutes
   d the energy dissipated in the resistor in 15 minutes

2 A carbon resistor of cross-sectional area $4.5 \times 10^{-5}\,\text{m}^2$ carries a current of 1.5 A. The mean drift velocity of the charge carriers is $2.3 \times 10^{-2}\,\text{m s}^{-1}$ and each charge carrier has a charge of 1.6×10^{-19} C. Calculate the number of charge carriers per unit volume in carbon.

3 A lamp is designed to take a current of 0.25 A when it is connected across a 240 V mains supply. The filament is made from tungsten of cross-sectional area $2.5 \times 10^{-9}\,\text{m}^2$. Calculate:
   a the resistance of the filament
   b the length of wire required to make the filament (resistivity of tungsten = $5.5 \times 10^{-8}\,\Omega$ m)

Answers on p.215

12 D.C. circuits

Practical circuits

Signs and symbols

Revised

You should familiarise yourself with circuit symbols. These are provided in the syllabus.

Potential difference and e.m.f.

Revised

These two terms have similar but distinct meanings. You have already met potential difference. Remember that it is defined as the work done, or energy transferred, when a unit charge moves between two points. The term e.m.f. is used where a source of energy (such as a cell) gives energy to a unit charge. However, it is a little more precise than this. If you feel a battery after it has delivered a current for some time, it is warm. This means that, as well as the battery giving energy to the charge, the charge is doing some work in overcoming resistance in the battery itself. When e.m.f is defined, this work is included.

The e.m.f. of a source is numerically equal to the energy converted per unit charge from other forms of energy into electrical potential energy.

Potential difference (p.d.) is numerically equal to the energy converted per unit charge from electrical potential energy to other forms of energy.

Expert tip

The term e.m.f. originally stood for electromotive force. This is rather confusing because it has nothing to do with force. Nowadays, e.m.f. stands as a term on its own and the use of the full 'electromotive force' is best avoided.

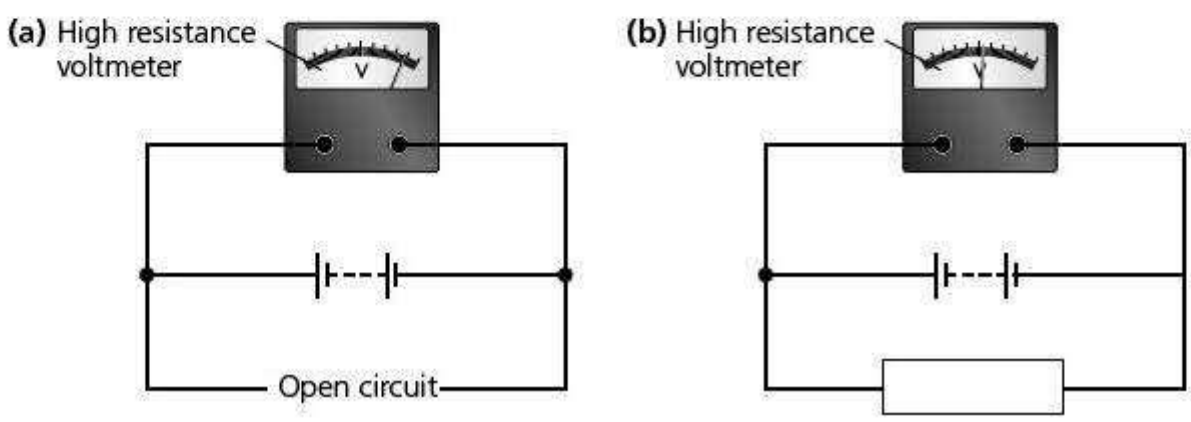

Figure 12.1 Potential difference across a battery

In Figure 12.1, circuit (a) shows the potential difference when (virtually) no current is taken from the battery. This is (almost) equal to the e.m.f. Circuit (b) shows how the potential difference across the cell falls when current is taken from it. Some work is done driving the current through the battery.

Internal resistance

Revised

You have seen how a source of e.m.f. has to do some work in driving a current through the source itself. In the case of a battery or cell, this is due to the resistance of the electrolytic solutions in the cell. In the case of a generator or transformer it is due to the resistance of the coils and other wiring in the

apparatus. It is clear that the source itself has a resistance; this is called the **internal resistance** of the source.

It is often easiest to think of the two parts of a source of e.m.f. (the energy giver and the internal resistance) quite separately (Figure 12.2).

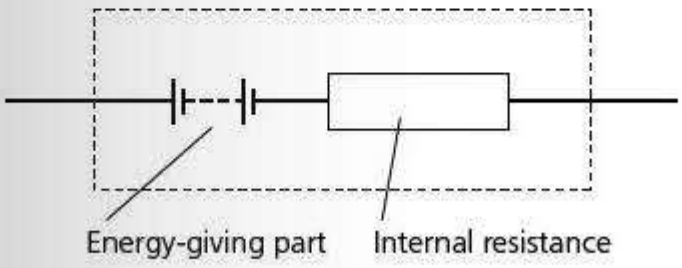

Figure 12.2

Consider a battery of e.m.f. E and internal resistance r, driving a current through an external resistance R. The potential difference across the terminals of the battery is V (Figure 12.3).

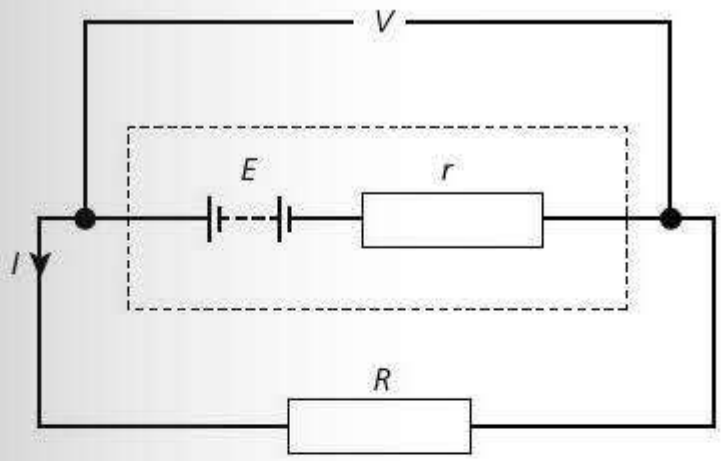

Figure 12.3

When you work with internal resistances treat them exactly the same as resistances in any other circuit. Work through the following equations to ensure that you understand the relationships.

$$E = I(R+r) = IR + Ir$$

But $IR = V$ and therefore:

$$E = V + Ir$$

Worked example

A battery is connected across a resistor of 6.0 Ω and an ammeter of negligible resistance. The ammeter registers a current of 1.5 A. When the 6.0 Ω resistor is replaced by an 18 Ω resistor, the current falls to 0.6 A. Calculate the e.m.f. and internal resistance of the battery.

Answer

Consider the 6.0 Ω resistor:

$$E = IR + Ir = (1.5 \times 6.0) + 1.5r \rightarrow E = 9.0 + 1.5r$$

Consider the 18 Ω resistor:

$$E = IR + Ir = (0.6 \times 18) + 0.6r \rightarrow E = 10.8 + 0.6r$$

Substitute for E in the second equation:

$$9.0 + 1.5r = 10.8 + 0.6r$$

Therefore:

$$r = 2\,\Omega$$

Substitute for r in the first equation:

$$E = 9.0 + (1.5 \times 2) = 12\text{ V}$$

Kirchhoff's laws

Kirchhoff's first law

Revised

The sum of the currents entering any point in a circuit is equal to the sum of the currents leaving that point.

This is a restatement of the law of conservation of charge. It means that the total charge going into a point is equal to the current leaving that point.

Worked example

Calculate the current I in Figure 12.4.

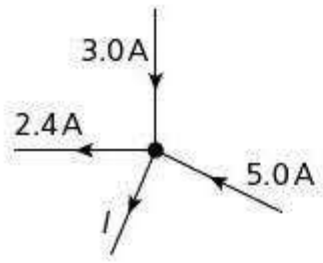

Figure 12.4

Answer

Consider the currents going into the point as positive and those leaving the point as negative.

$3.0 - 2.4 - I + 5.0 = 0$

Therefore:

$I = 5.6\,\text{A}$

Kirchhoff's second law

Revised

In any closed loop in an electric circuit, the algebraic sum of the electromotive forces is equal to the algebraic sum of the potential differences.

This is restatement of the law of conservation of energy. Remember that the potential difference between two points is the work done per unit charge in moving from one point to the other. If the start point and the end point are the same then the net energy change, or work done, must be zero.

Going round a loop, we consider instances where energy is given to the charge to be positive and where energy is lost by the charge to be negative.

Revision activity

- Explain to a pre-A level physics student why (a) Kirchhoff's first law is a restatement of the law of conservation of charge and (b) Kirchhoff's second law is a restatement of the law of conservation of energy.

Worked example

Figure 12.5 shows a circuit. Calculate the e.m.f. of cell E_2 for the current through the ammeter to be zero.

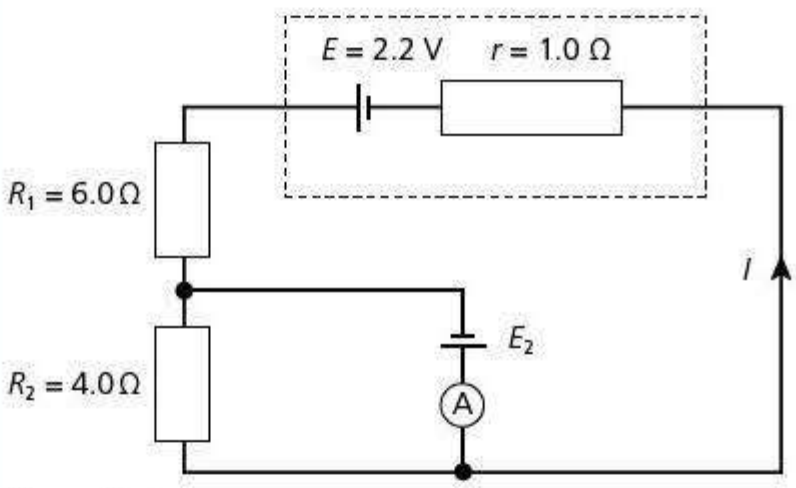

Figure 12.5

Answer

Consider the outer loop and move anticlockwise around the loop:

$2.2 - 6.0I - 4.0I - 1.0I = 0$

Therefore:

$I = 0.2\,\text{A}$

Consider the inner loop, which contains the 4.0 Ω resistor and the cell, E_2. Again move anticlockwise around the loop.

$(-4.0 \times 0.2) - E_2 = 0$

Therefore:

$E_2 = -0.8\,\text{V}$

The minus sign shows that in order to satisfy the conditions the cell should be connected the other way around.

Expert tip

The e.m.f. of the second cell in Figure 12.5 is stated as $-E_2$ because the movement is from the positive to the negative cell — from a position of high potential energy to one of lower potential energy.

Resistors in series

Revised

To find the total resistance of resistors connected in series (Figure 12.6) we can use Kirchhoff's second law.

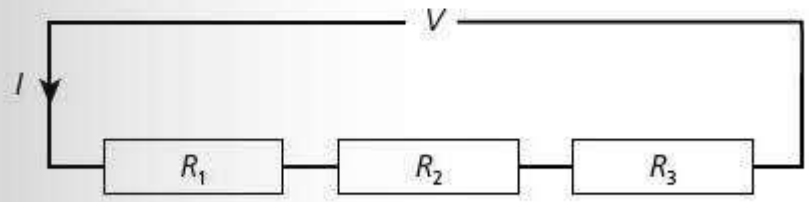

Figure 12.6 Resistors in series

Going around the circuit:

$$V - IR_1 - IR_2 - IR_3 = 0$$

$$V = IR_1 + IR_2 + IR_3 = I(R_1 + R_2 + R_3)$$

But:

$$\frac{V}{I} = R_{total}$$

So:

$$\boldsymbol{R_{total} = R_1 + R_2 + R_3}$$

Resistors in parallel

Revised

To find the total resistance of resistors connected in parallel (Figure 12.7) we can use Kirchhoff's laws.

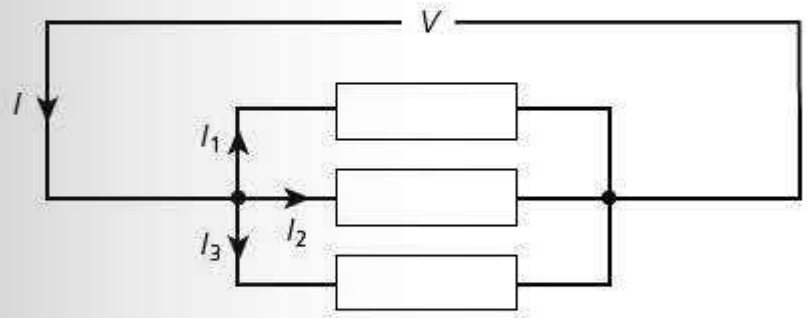

Figure 12.7 Resistors in parallel

Using Kirchhoff's second law we can see there is the same potential difference across each of the resistors, therefore:

$$I = \frac{V}{R_{total}} \qquad I_1 = \frac{V}{R_1} \qquad I_2 = \frac{V}{R_2} \qquad I_3 = \frac{V}{R_3}$$

Using Kirchhoff's first law:

$$I - I_1 - I_2 - I_3 = 0 \rightarrow I = I_1 + I_2 + I_3$$

Therefore:

$$\frac{V}{R_{total}} = \frac{V}{R_1} + \frac{V}{R_2} + \frac{V}{R_3}$$

and cancelling gives:

$$\boldsymbol{\frac{1}{R_{total}} = \frac{1}{R_1} + \frac{1}{R_2} + \frac{1}{R_3}}$$

Worked example

Figure 12.8 shows a network of resistors made up of five identical resistors each of resistance R. Calculate the resistance of the network.

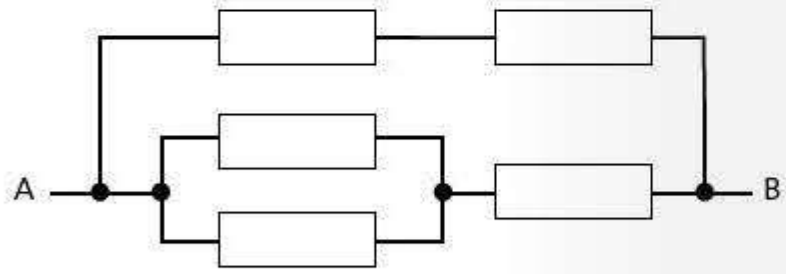

Figure 12.8

Answer

resistance of the top line = $2R$

resistance of the pair of resistors in parallel = $\left(\frac{1}{R_1}+\frac{1}{R_2}\right)^{-1} = 0.5R$

resistance of the lower line = $R + 0.5R = 1.5R$

$$\frac{1}{R_{total}} = \frac{1}{2R} + \frac{1}{1.5R} = \frac{3+4}{6R} = \frac{7}{6R}$$

So $R_{total} = \frac{6R}{7} = 0.86\,\Omega$

Potential dividers

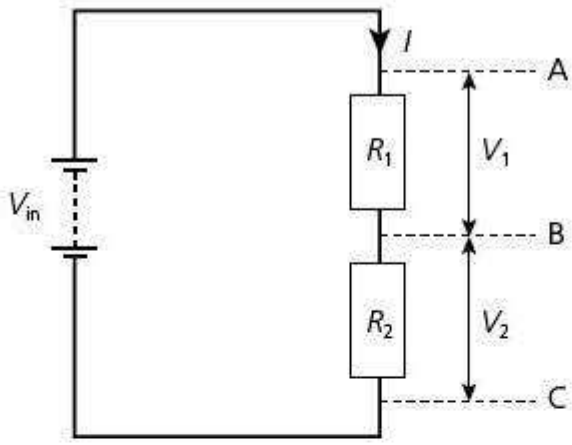

Figure 12.9

A potential divider does exactly what the name suggests. Study Figure 12.9. If there is a potential V across AC then the total potential drop is divided between AB and BC.

In Figure 12.9, $V_1 = IR_1$ and $V_2 = IR_2$.

$$\text{So } \frac{V_1}{V_2} = \frac{IR_1}{IR_2} = \frac{R_1}{R_2}$$

A useful alternative way of working with this is:

$$V_{out} = \frac{R_1 + R_2}{R_2} V_{in}$$

where V_{out} is the potential drop across R_2 and V_{in} is the potential difference across the two resistors.

Worked example

Calculate the output potential in the circuit shown in Figure 12.10.

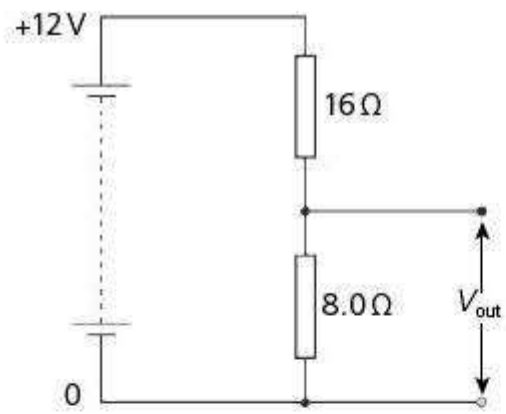

Figure 12.10

Answer

$$V_{out} = \frac{8.0}{16 + 8.0} \times 12 = 4.0\,\text{V}$$

Using a potential divider to provide a variable voltage output

Revised

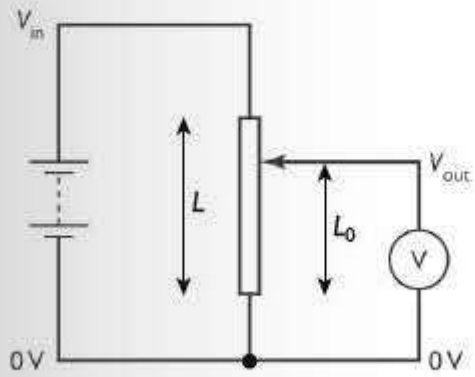

Figure 12.11

The two resistors in a potential divider can be replaced by a single conductor, with a sliding contact to the conductor (Figure 12.11). The conductor could be a long straight wire, a strip of carbon or a coiled wire. Used in this way the potential divider is called a **potentiometer**.

If a uniform wire is used the output potential is:

$$V_{out} = \frac{L_0}{L} \times V_{in}$$

Using a potential divider to compare potential differences

Revised

Comparing cells

When a potential divider is used to compare potential differences it is usually called a potentiometer.

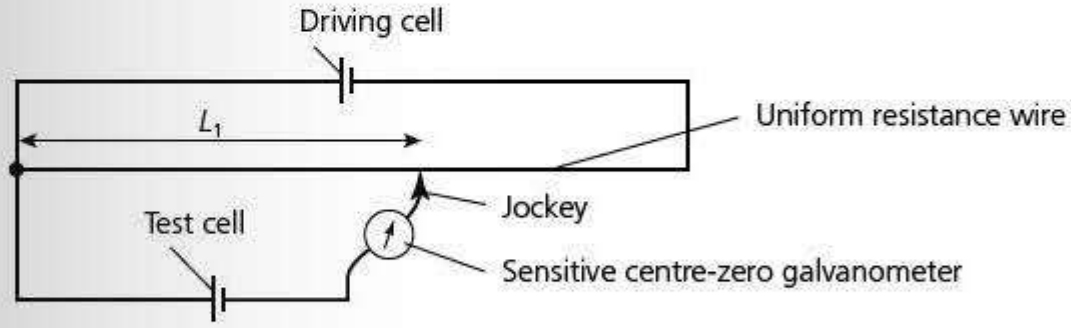

Figure 12.12

The circuit in Figure 12.12 can be used to compare the e.m.f. of two cells. The position of the jockey is adjusted so that the current through the galvanometer is zero. The e.m.f. (E_t) of the test cell is now equal to the potential drop across the length L_1 of the resistance wire. This method of measurement is known as a **null method** — null meaning nothing. The length L_1 is recorded.

The test cell is then replaced with a standard cell of e.m.f. E_s. The position of the jockey is adjusted until the new null reading is found. The new length (L_2) is measured and recorded.

The two e.m.f.s are related by the equation:

$$\frac{E_t}{E_s} = \frac{L_1}{L_2}$$

A **null method** is one in which the apparatus is arranged so that a zero reading is required. The zero reading implies that the apparatus is balanced and that the value of an unknown can be found from the values of the constituent parts of the apparatus only.

Comparing resistors

A similar method can be used to compare resistors. Two resistors are set up in series with a cell. The series circuit is then connected to the potentiometer as shown in Figure 12.13 and the balance point is found ($L = L_1$). The potential drop across the resistor is IR_1.

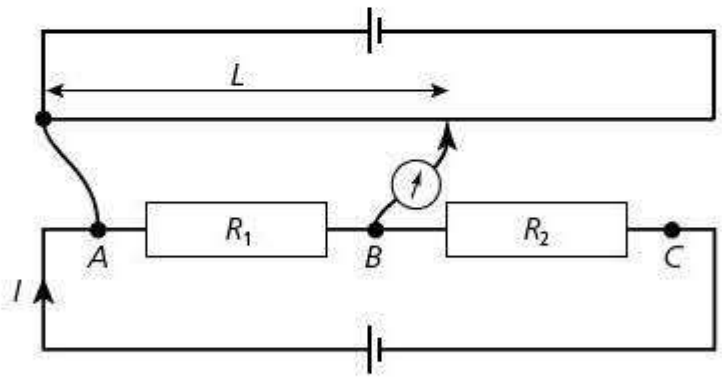

Figure 12.13

The leads from the potentiometer are disconnected and then reconnected across the second resistor (points B and C on the diagram). The new balance point is found ($L = L_2$). The potential drop across this resistor is IR_2.

Hence:

$$\frac{R_1}{R_2} = \frac{L_1}{L_2}$$

Expert tip

It is not enough to just learn the equations by heart — you need to understand the context. In these examples it is even more important than in many others. Work carefully through the development of the equations and ensure that you understand the logic of their development.

Worked example

A potentiometer, which has a conducting wire of length 1.0 m, is set up to measure the e.m.f. of a dry cell. When the dry cell is connected to the potentiometer, the balance length is found to be 43.5 cm. A standard cell of e.m.f. 1.02 V is used to replace the dry cell. The balance length is now 12.9 cm less than for the dry cell. Calculate the e.m.f. of the dry cell.

Answer

The balance length for the standard cell = 43.5 − 12.9 = 30.6 cm.

$$\frac{E_t}{E_s} = \frac{L_1}{L_2}$$

$$\frac{E_t}{1.02} = \frac{43.5}{30.6} = 1.42$$

$$E_t = 1.42 \times 1.02 = 1.45\,\text{V}$$

Revision activity

- Add the following 'must-learn' equations to your list:

$$V_{out} = \frac{R_2}{R_1 + R_2} V_{in}$$

$$\frac{E_t}{E_s} = \frac{L_1}{L_2}$$

$$\frac{R_1}{R_2} = \frac{L_1}{L_2}$$

Now test yourself

Tested

1 Figure 12.14 shows the currents at a junction in a circuit. Deduce the value of the current labelled I and give its direction.

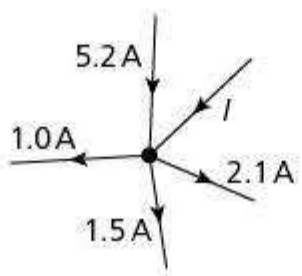

Figure 12.14

2 A battery of e.m.f. 6.0 V and an internal resistance of 1.6 Ω is connected across a resistor of resistance 4.8 Ω. Use Kirchhoff's second law to show that the current through the resistor is 0.94 A.

3 A potential divider is made up from a battery of e.m.f. 12.0 V and negligible internal resistance and a wire of length 0.800 m and uniform thickness. Calculate the output voltage when the distance L_0 in Figure 12.11 on page 73 is 0.430 m.

Answers on p.215

13 Particle and nuclear physics

Atoms, nuclei and radiation

Nuclear model of the atom

Revised

By the early part of the twentieth century, following the discovery of the electron in 1896, it was recognised that the atom has structure. Early models of the atom considered it to be a positive cloud of matter with electrons embedded in it — the plum-pudding model.

Rutherford scattering experiment

In 1911, Rutherford's alpha-scattering experiment led to a model of the atom with a positively charged **nucleus** containing all the positive charge and virtually all the mass of the atom. This nucleus is surrounded by the much smaller, negatively charged **electrons**.

A plan view of the Rutherford alpha-scattering apparatus is shown in Figure 13.1. Figure 13.2 shows deflection of alpha particles by a nucleus.

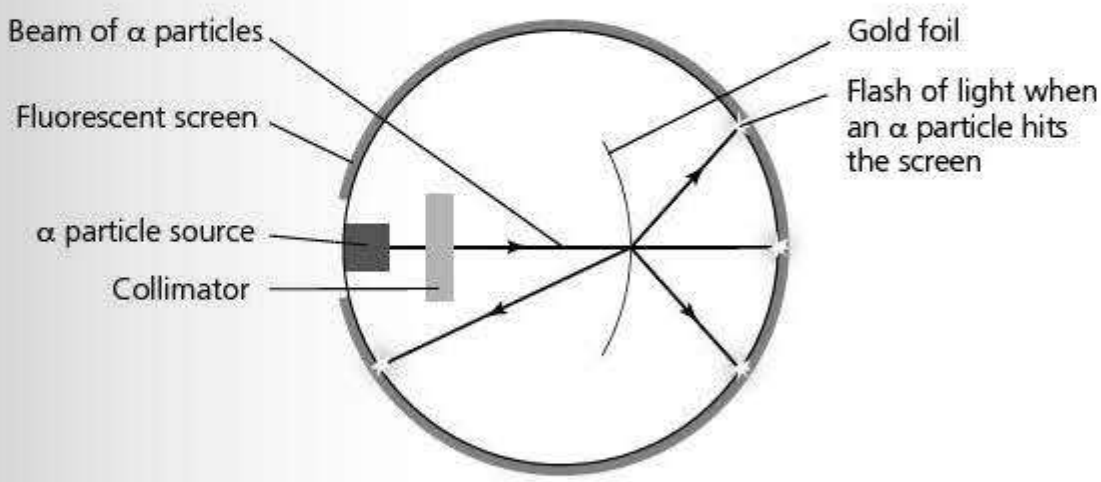

Figure 13.1

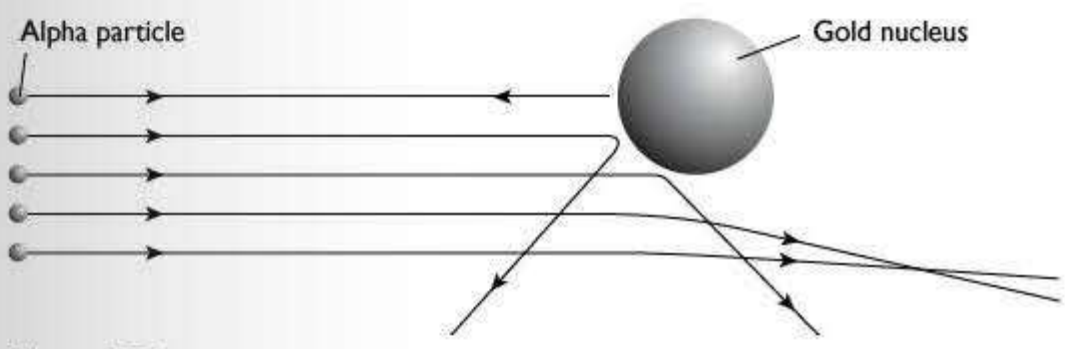

Figure 13.2

Results from the alpha-scattering experiment

- The vast majority of the particles passed straight through the foil with virtually no deflection.
- A few (approximately 1 in 10 000) of the alpha particles were deflected through angles in excess of 90°.

Alpha particles are positively charged with a mass about 8000 times that of an electron. The large-angle deflection could only occur if the alpha particles

interacted with bodies more massive than themselves. This led Rutherford to develop the solar-system model of the atom (Figure 13.3).

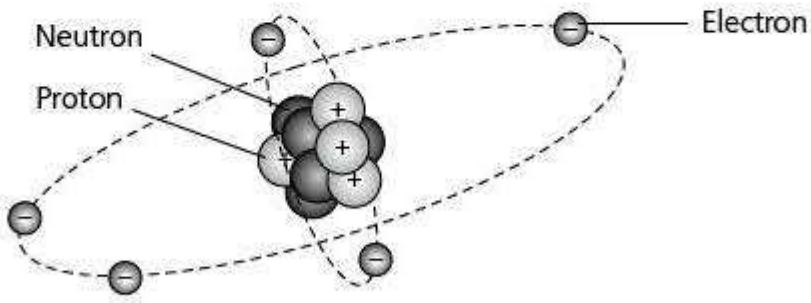

Figure 13.3 Rutherford's solar-system model of the atom

The small numbers of particles that are deflected through large angles indicate that the nucleus is very small. The proportions deflected in different directions enabled Rutherford to estimate the diameter of the nucleus as being in the order of 10^{-14} m to 10^{-15} m. This compares with an atomic diameter of about 10^{-10} m.

Figure 13.3 is not drawn to scale. If it were, and the nucleus was kept to this size, then the electrons would be over 100 m away!

Revision activity

- Make a list of (a) the basis of the Rutherford alpha-particle scattering experiment, (b) the important conclusions that were drawn from it and (c) the evidence that led to those conclusions.

Subatomic particles

Revised

The subatomic particles are shown in Table 13.1. You can see that the nucleus has a structure, being made up of protons and neutrons.

Table 13.1

Particle	Charge*	Mass**	Where found
Proton	+1	1	In the nucleus
Neutron	0	1	In the nucleus
Electron	−1	1/1840	In the outer atom

*Charge is measured in terms of the electronic charge: $e = 1.6 \times 10^{-19}$ C.
**Mass is measured in unified atomic mass units (u): 1 u is $\frac{1}{12}$ of the mass of a carbon-12 atom.

The chemical elements

Revised

The different elements and their different chemical properties are determined by the number of protons in the nucleus that, in turn, determines the number of electrons in the outer atom. The different atoms, or more precisely their nuclei, are fully described by the **proton number** and the **nucleon number**.

The **proton number** is the number of protons in a nucleus.

The **nucleon number** is the total number of protons plus neutrons in a nucleus.

All elements have **isotopes**. Isotopes have identical chemical properties but different physical properties.

Isotopes have the same number of protons in the nucleus but different numbers of neutrons.

The chemical properties of different isotopes of the same element are identical because they have the same number of protons and hence the same electron configuration in the outer atom.

A **nuclide** is fully described by the notation shown in Figure 13.4.

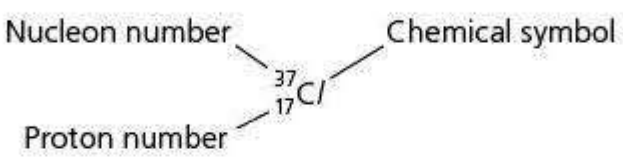

Figure 13.4

Expert tip

In some older books you might see the proton number referred to as the atomic number and the nucleon number as the mass number.

This nuclide is an isotope of chlorine. The nucleus contains 17 protons and (37 – 17) = 20 neutrons. This isotope makes up about 24% of naturally occurring chlorine. The other 76% is made up of the isotope $^{35}_{17}Cl$, which contains 18 neutrons.

A **nuclide** is a single type of nucleus with a specific nucleon number and a specific proton number.

Radioactive decay

Revised

Some nuclides are unstable and decay by emitting radiation; this is known as radioactive decay.

The four common types of radioactive decay — alpha decay, beta minus decay, beta plus decay and gamma decay — are shown in Table 13.2.

Table 13.2

Name of particle	Nature	Charge	Penetration	Relative ionising power	Reason for decay
Alpha (α)	Fast moving helium nucleus (2 protons + 2 neutrons)	+2*e*	Weak penetration; is absorbed by a few centimetres of air, thin card or aluminium foil	High	Nucleus is too large; helium groupings form within the nucleus and sometimes escape
Beta minus (β^-)	Very fast moving electron	–*e*	Fair; stopped by several millimetres of aluminium	Fair	Nucleus has too many neutrons; a neutron decays into a proton and an electron; the electron escapes from the nucleus
Beta plus (β^+)	Very fast moving positron	+*e*	The free positron collides with an electron and the pair are annihilated producing a high-energy photon	Weak; see comment on penetration	Nucleus has too many protons; a proton decays into a neutron and a positron; the positron escapes from the nucleus
Gamma (γ)	Short-wavelength electromagnetic radiation	Zero	High; only partly stopped by several cm of lead	Low	Usually emitted in conjunction with another event, such as the emission of an alpha particle as the nucleus drops back to a lower more stable energy state

The different penetrating powers of the radiations can be explained by the relative ionising powers. Each time radiation ionises a particle it loses energy. So alpha particles, which cause many ionisations per unit length, lose their energy over a much shorter distance than gamma rays, which cause far fewer ionisations.

All particles have an antiparticle whose mass is the same as the particle but with opposite charge. Hence the antiproton has a charge of –1 and a mass of 1. The antielectron — usually referred to as a **positron** — has the mass of an electron and a charge of +1.

Deflection of the radiations in electric fields

Both alpha and beta (minus and plus) particles are charged and are consequently deflected by both electric and magnetic fields. Gamma rays are uncharged and are, therefore, not deflected in either type of field. Although alpha particles have twice the charge of beta particles, they are approximately 8000 times as massive and are therefore deflected by very much less. The direction of deflection is determined by the sign of the charge on the particle. Hence alpha and beta plus particles deflect in the same direction, whereas the beta minus deflects in the opposite direction.

Alpha particles from a particular source all have the same energy. Consequently, in the same field they all deflect by the same amount. Beta particles have a range of energies, so they have a range of different deflections.

Fundamental particles

The neutrino

Revised

Figure 13.5 shows the ranges of energy with which alpha and beta particles are emitted from a particular isotope.

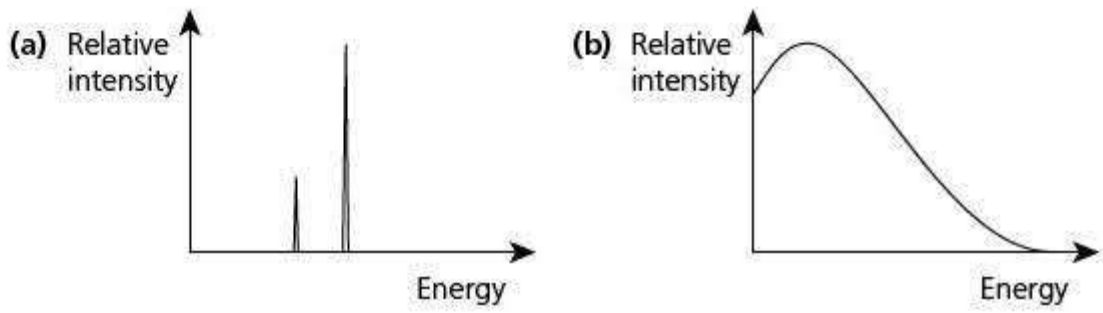

Figure 13.5 Energy spectra of (a) alpha and (b) beta emission

It is clear from the alpha distribution (a) that the energies within the nucleus are quantised, in a similar way as there are discrete energy levels in the outer atom.

Why is the beta distribution (b) continuous? At the same time as the beta particle is emitted another particle is emitted; this particle has no charge and no (or very, very small) rest mass and is called the **neutrino**. The beta particle and the neutrino share the available energy in different proportions.

There is a balance in the matter and antimatter that is emitted, so that in β^- decay an antineutrino is emitted and in β^+ decay a neutrino is emitted.

The equation for β^- decay is:

$^{1}_{0}n \rightarrow {}^{1}_{1}p + {}^{0}_{-1}e + {}^{0}_{0}\bar{\nu}$ ($\bar{\nu}$ is the symbol for the antineutrino)

The equation for β^+ decay is:

$^{1}_{1}p \rightarrow {}^{1}_{0}n + {}^{0}_{1}e + {}^{0}_{0}\nu$ (ν is the symbol for the neutrino)

Revision activity

- Add a final column to Table 13.2 (showing common types of radioactive decay) and insert information about the neutrino and antineutrino.

Leptons, hadrons and quarks

Revised

Electrons, positrons, neutrinos and antineutrinos are believed to be fundamental particles with no further structure. They are classed as **leptons** (meaning 'light ones').

Protons, neutrons and their antiparticles are known as **hadrons** ('heavy ones'). They are not fundamental and do have an internal structure. There are many different types of hadron, each type made up of different combinations of two or three smaller particles, which are called **quarks**. There are six types (or 'flavours') of quark, each with different properties such as upness, downness or strangeness. Each flavour has both a particle and an antiparticle. This course concentrates mainly on the quarks, which make up protons and neutrons and their antiparticles — the up and down quarks.

Expert tip

Strangeness is a property assigned to the 'strange quark', initially called this because the behaviour of a hadron produced in a collision of protons had a much longer lifetime than expected — it acted strangely! Do not worry about the peculiar names that are given to quarks, nor their more bizarre behaviour or properties. Just concentrate on the basic properties listed below.

Name	Symbol	Charge	Strangeness
up	u	$+\frac{2}{3}e$	0
down	d	$-\frac{1}{3}e$	0
antiup	$\bar{u}$	$-\frac{2}{3}e$	0
antidown	$\bar{d}$	$+\frac{1}{3}e$	0
strange	s	$-\frac{1}{3}e$	−1
antistrange	$\bar{s}$	$+\frac{1}{3}e$	+1

Figure 13.6 shows pictorial representations of the quark structure of the proton and the neutron.

Figure 13.6 Quark structure of (a) a proton and (b) a neutron

You can see that the charge on the proton is 1*e*; the charges on its three quarks are $+\frac{2}{3}e$, $+\frac{2}{3}e$ and $-\frac{1}{3}e$.

Worked example

Show that the charge on a neutron is zero.

Answer

A neutron has two down quarks, each with charge $-\frac{1}{3}e$ and an up quark, charge $+\frac{2}{3}e$.

$-\frac{1}{3}e - \frac{1}{3}e + \frac{2}{3}e = 0$

Expert tip

It is not easy to understand how quarks can change from one flavour to another. Do not worry about it — things on the nuclear and subnuclear scale behave quite differently from those on the football-sized scale. Indeed, we have no right to expect them to behave in the same way!

More on β decay

Revised

β^- decay occurs when a neutron decays into a proton. On the quark model, one of the up quarks converts into a down quark releasing an electron and an antineutrino:

$${}^{1}_{0}n \rightarrow {}^{1}_{1}p + {}^{0}_{-1}e + {}^{0}_{0}\bar{\nu}$$

The total charge before and after the decay is the same.

β^+ decay occurs when a proton decays into a neutron, a positron and a neutrino. On the quark model one of the down quarks converts into an up quark. The total charge is the same after the decay as before.

Subnuclear forces

Revised

Outside the nucleus there are two types of interaction: the gravitational and the electromagnetic interactions. Similarly, there are two more types of interaction inside the nucleus: the strong and the weak interactions.

You have seen that in β^- decay a quark changes its flavour from up to down with the emission of an electron and an antineutrino. β emission is a consequence of the weak interaction.

The **strong** interaction is the force that holds the nucleus together against the massive electromagnetic repulsion between the protons. It originates from the forces between quarks.

The **weak** interaction, as the name suggests, is much smaller than the strong interaction. It is the interaction that causes a quark (or lepton) to change flavour.

Mass–energy

Revised

In his theory of relativity, Einstein introduced the idea that mass and energy are closely related. One way of viewing this is to consider energy as having mass. It is an established experimental fact that the mass of a particle travelling at or near the speed of light is greater than its mass at rest. This idea can be extended to other forms of energy.

When a radioactive nucleus decays, it drops into a lower energy state. The average energy per nucleon is slightly less in the new nucleus than in the original nucleus. Consequently, the average mass per nucleon is less. The energy that is 'lost' is taken away by the alpha or beta particle (as kinetic energy) or the gamma ray (as electromagnetic energy). These have more energy and hence more mass. Instead of having conservation of energy and conservation of mass as two separate laws, we now have a single conservation law; the conservation of mass–energy.

This is explored further in the A2 course.

Now test yourself

Tested

1 Relative atomic masses are usually given as whole numbers, but chlorine is usually given as 35.5. Explain why the relative atomic mass of chlorine is given to this precision.

2 Describe in words the make-up of the nuclide $^{197}_{79}Au$.

3 The Λ^0 particle consists of one up quark, one down quark and one strange quark. Use the information in the table on page 79 to determine:

   a the charge on the Λ^0 particle

   b the strangeness of the Λ^0 particle

4 a Describe β^+ decay in terms of the quark model.

   b Show that charge is conserved in β^+ decay.

Answers on p.215

AS experimental skills and investigations

Almost one-quarter of the marks for the AS examination are for experimental skills and investigations. These are assessed on Paper 3, which is a practical examination.

A total of 40 marks are available on Paper 3, divided equally between two questions. Although the questions are different on each Paper 3, the number of marks assigned to each skill is always similar. Details are given in the syllabus.

Making measurements

Variables

Revised

You should be familiar with the terms **independent variable** and **dependent variable** and be able to recognise them in different experiments. The table below shows some examples.

Investigation		Independent variable	Dependent variable
1	Investigating the height of a bouncing ball	Height from which the ball is dropped	Height to which the ball bounces
2	Investigating the period of vibration of masses suspended by a spring	Mass on the end of the spring	Periodic time
3	Investigating the melting of ice in water	Temperature of water	Time taken to melt
4	Investigating the current through resistors	Resistance of resistor	Current
5	Investigating e.m.f. using a potentiometer	e.m.f.	Balance length

The **independent variable** is the variable that you control or change in an experiment.

The **dependent variable** is the variable that changes as a result of the changing of the independent variable.

We will refer to these examples later in the text, so you might like to put a marker on this page so that you can easily flip back as you read.

Range of readings

Revised

When you plan your experiment you should use as wide a range of values for the independent variable as possible. If you consider Investigation 3 in the table above — the melting ice experiment — the range of temperatures of the water in the beaker should be from nearly 100°C to about 10°C. You will probably be told how many readings to take but it is likely to be a minimum of six sets. The values chosen for the independent variable should be taken at roughly equal intervals. A sensible spread might be 95 °C, 80 °C, 60 °C, 45 °C, 30 °C and 15 °C.

Revision activity

- Accuracy, precision and uncertainty, including combining uncertainties, are discussed in detail in the Measurement techniques section on pages 17–18. You should refer back to this to refresh your memory.

Errors and repeating readings

Revised

Unlike uncertainties, which are determined by the quality of the measuring instruments used, errors can be avoided or reduced by taking more care or ensuring that instruments are correctly calibrated before their use.

An **error** is a mistake in taking a reading.

You should recognise that you can reduce the chances of serious error by repeating readings, all of which should be included in your records. In general, it is only necessary to repeat those readings with the potential for the highest percentage uncertainty.

Worked example

A student is measuring the relationship between the height from which a ball is dropped and the height to which it bounces. The student drops the ball from a height of 1.0 m and it bounces to a height of approximately 50 cm.

State which measurements should be repeated and justify your answer.

Answer

The height from which the ball is dropped can be measured to the nearest millimetre, giving a percentage uncertainty of 0.1%. The height to which the ball bounces is more difficult to measure because the ball is continuously moving, and can only be estimated to about 1 cm, giving a percentage uncertainty of 2%. This is a much larger percentage uncertainty. Hence the height of bounce should be repeated, with the dropping height being the same every time.

Types of error

Revised

We can loosely put errors in measurement into one of two categories — **random errors** and **systematic errors**.

Random errors occur due to a lack of precision in taking readings, slight changes in experimental conditions and making value judgments when taking measurements. Where it is felt that the random error might be significant, repeated readings should be taken. These readings will give you further information about the uncertainty in the measurement. For instance, if you take five readings of the maximum amplitude of a swinging pendulum as 24.1 cm, 23.8 cm, 24.3 cm, 23.6 cm and 24.0 cm, this gives a mean value of 23.96 cm, which would be rounded to 24.0 cm. It is quite clear that the measuring instrument can measure to the nearest millimetre, but to give the reading as 24.0 ±0.1 cm would be claiming a greater precision than you have. The largest deviation from the average value is 0.4 cm, so the correct precision is ±0.4 cm. The reading should be recorded as 24.0 ±0.4 cm.

Random errors lead to values differing from the 'true value' by random amounts.

Systematic errors lead to values differing from the 'true value' by the same amount or by the same fraction each time

Systematic errors generally occur because of faults in a measuring instrument, or are repeated errors such as a parallax error (not looking perpendicularly at a measuring instrument but always at the same angle). It is worth noting that if the angle from which the instrument is viewed changes, then the error introduced will be random, not systematic. Careful thought when setting up and carrying out the experiment should ensure that parallax errors are avoided.

In the diagram below, the passenger thinks that the driver is travelling faster than he really is because she is looking at the speedometer at an oblique angle, introducing a parallax error.

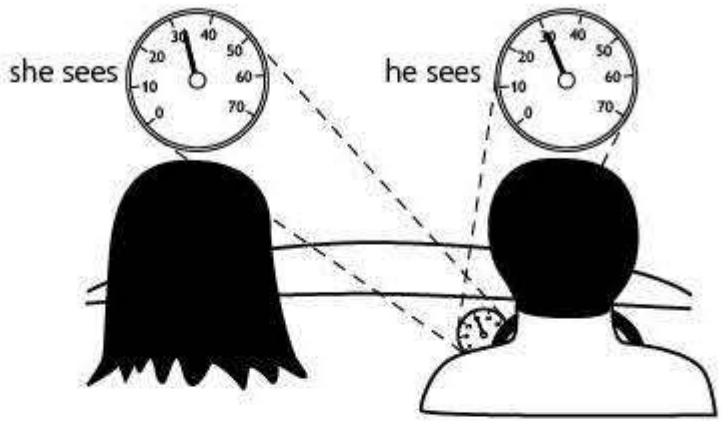

Parallax error

The most common form of systematic error due to a faulty instrument is a zero error. When you take a micrometer screw gauge and close the jaws using the ratchet, you should check if the zero is lined up correctly. If it is not, then this is easy to rectify by simply subtracting the error from the reading. (Don't forget that if the error is a minus quantity, subtracting a minus quantity means adding its magnitude to the measured quantity.)

Worked example

The diagrams below show the diameter of a steel ball bearing being measured.

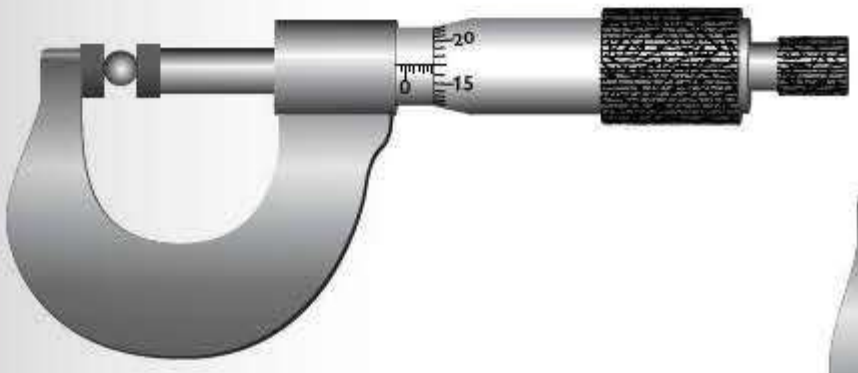

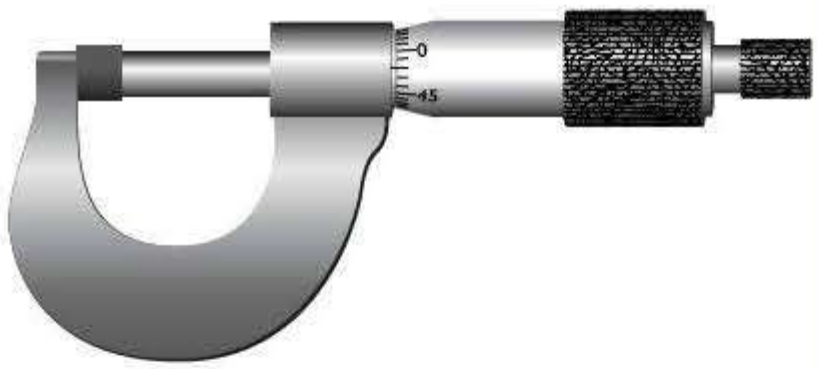

Determine the diameter of the ball bearing.

Answer

reading on the barrel = 3.00 mm

reading on the thimble = 0.17 mm

Calculate the final reading by subtracting the zero error from the initial reading:

reading on micrometer = 3.17 mm

zero error = −0.02 mm

diameter of the ball bearing = 3.17 − (−0.02) = 3.19 mm

The other type of systematic error you could encounter is an instrument with a wrongly calibrated scale — that is, it consistently reads high or low, at a steady percentage of the true reading. An example might be a stopwatch that runs slow. This is more difficult to allow for unless you have a standard with which to compare it. It will not cause any scattering of the points on a graph but it will cause a shift in the gradient of the graph.

Presentation of data and observations

You should be in the habit of recording your measurements and results directly into your laboratory notebook, rather than using scraps of paper that might get lost or destroyed. This means you need to be organised. You must think clearly, before you start your work:

- What measurements do I need to make?
- What measurements do I need to repeat?
- What quantities do I need to calculate from my raw results?

You then need to draw a table that has sufficient columns and rows to accommodate these quantities, including columns for repeated readings and their averages.

The heading for each column should include the quantity being measured and the unit in which it is measured.

Raw data

Revised

The degree of precision of raw data in a column should be consistent. It will be determined by the measuring instrument used or the precision to which you can measure. This means that the number of significant figures may not be consistent. An example might be when measuring across the different resistors using a potentiometer, where the balance points might vary from 9.3 cm to 54.5 cm.

Calculated data

Revised

With data calculated from raw measurements, the number of significant figures must be consistent with the raw measurements. This usually means that, except where they are produced by addition or subtraction, calculated quantities should be given to the same number of significant figures as (or one more than) the measured quantity of least precision. If a time is measured as 4.1 s, squaring this gives 16.81 s^2. However, you would record the value as 16.8 s^2 (or perhaps 17 s^2). As with the raw data this means that the number of significant figures in the column is not necessarily consistent.

The table below shows some readings from a potentiometer experiment and demonstrates how readings should be set out:

- the column headings, with quantity and unit
- the raw data to the same precision
- the calculated data to the relevant number of significant figures

R/Ω	L_1/m	L_2/m	L_{av}/m	$\ln(L_{av})$
47	0.191	0.194	0.193	–1.65**
100	0.381	0.379	0.380*	–0.968
220	0.778	0.784	0.781	–0.247

* Do not forget to include the zero, to show that the length has been measured to the nearest millimetre.

** You could justify writing this as –1.645 — one more significant figure than the raw data. If this helps to plot a more precise graph, then it would be sensible to do this.

Graphs

Revised

Reasons for plotting graphs

Graphs:

- tend to average data thereby reducing the effects of random errors
- identify anomalous points (which should then be investigated further)
- tend to reduce the effect of random errors
- give information that can be used to identify relationships between variables

Rules for plotting graphs

1 **Draw and label axes**. Axes should be labelled with the quantity and the unit in a similar manner to column headings in a table. In general, the independent variable (the one you control) is put on the horizontal axis (*x*-axis). The dependent variable (the one that changes due to changes in the independent variable) goes on the vertical axis (*y*-axis).

2 **Choose sensible scales**. Scales should be chosen so that the points occupy at least half the sheet of graph paper used. However, awkward scales (1:3, 1:7, 1:11, 1:13 or their multiples) must be avoided. You do not necessarily have to

Typical mistake

The use of 'awkward' scales, in an attempt to use the whole grid, causes loss of credit year after year. It also makes it more likely that you will mis-plot the points.

include the origin on the graph if this means that a better use of the graph paper can be achieved.

3 **Plot points accurately**. Points should be plotted by drawing a small cross with a sharp pencil. Do *not* use dots or blobs. Blobs will be penalised and dots are often difficult to see as they tend to disappear into the line.

4 **Draw the best-fit straight line or best smooth curve**. The positioning of the points will show a trend, for example the pressure of a gas decreases as its volume increases. The trend line may be a curve or a straight line. When you draw a straight line use a 30 cm ruler and a sharp pencil. There should be an equal number of points above and below the line. Take care that those points above and those below the line are evenly distributed along the line. Curves should be smooth and generally will form a single curve.

5 **Identify and check any anomalous points**. If a point is well off the line, go back and check it. In all probability you will have made an error, either in plotting the point or in taking the reading.

Revision activity

- Make a list of these five points on a piece of card and check them off each time you do an experiment.

Do *not* adjust your straight line or curve so that it goes through the origin. There may be good reasons why the dependent variable is not zero when the independent variable is zero. Consider Investigation 2 in the table on page 81 — the experiment to investigate the period of vibration of a mass on the end of a spring — the measurements of the mass on the spring do *not* make allowance for the mass of the spring itself.

A typical straight-line graph is shown below.

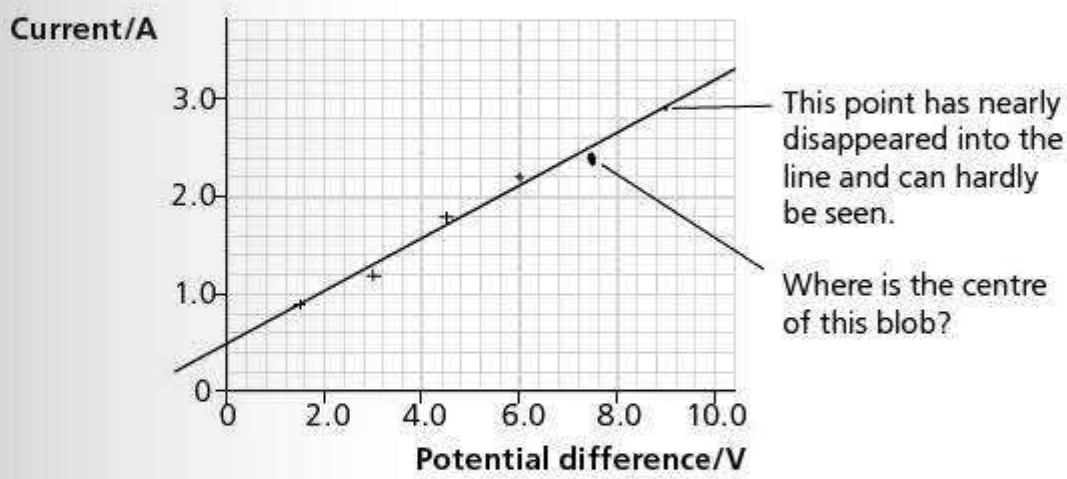

Curves should be drawn with a single sweep, with no feathering or sudden jerks. You need to practise doing this.

Graph (a) below shows a well-drawn smooth curve. Graph (b) shows a poorly drawn curve through the same points. Note the jerkiness between the first two points and the feathering between points 2 and 4 and between points 5 and 6.

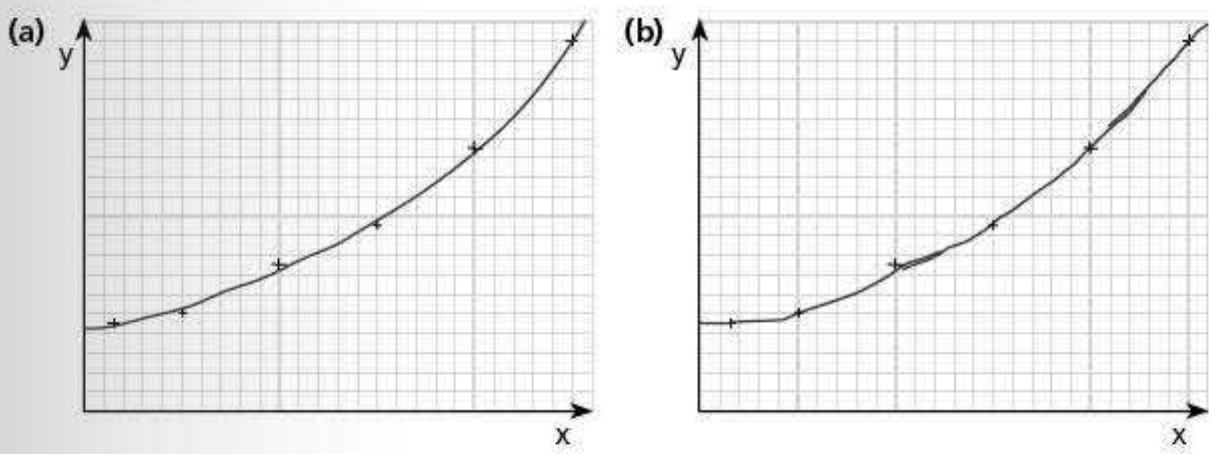

Measuring the gradient of a graph

The gradient of a graph is defined as:

$$\frac{\text{change in } y}{\text{change in } x} = \frac{\Delta y}{\Delta x} = \frac{y_2 - y_1}{x_2 - x_1}$$

When choosing the points to calculate the gradient, you should choose two points on the line (not from your table of results). To improve precision, the two points should be as far apart as possible.

In the straight-line graph on page 85, two suitable points might be (0, 0.5) and (10.0, 3.2).

This gives a gradient $= \frac{3.2 - 0.5}{10.0 - 0} = 0.27 = \text{A V}^{-1}$

Note that you should always include the unit of the gradient.

You may be asked to find the gradient of a curve at a particular point. In this case, you must draw a tangent to the curve at that point and then calculate the gradient of this line in a similar way to that described above.

Finding the *y*-intercept

The *y*-intercept of a graph is the point at which the line cuts the *y*-axis (that is, when $x = 0$). In the example on page 85, the intercept is 0.5 A. When a false origin is used, it is a common mistake for students to assume that the vertical line drawn is the zero of *x*, so if you have used a false origin check carefully that the vertical line is at $x = 0$.

If, however, the chosen scale means that the *y*-intercept is not on the graph, it can be found by simple calculation.

- Calculate the gradient of the graph.
- The equation for a straight line graph is $y = mx + c$. Choose one of the points used for calculating the gradient and substitute your readings into the equation.

Worked example

The voltage input to an electrical device and the current through it were measured. The graph was drawn from the results.

Determine the *y*-intercept on the graph.

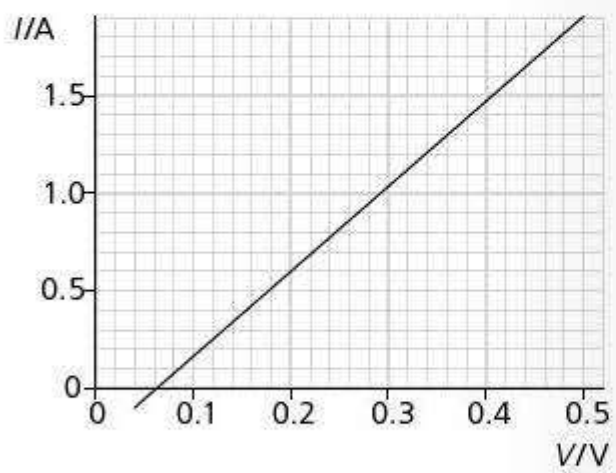

Answer

Find the gradient. Use the points (0.06, 0) and (0.50, 1.90).

$$\text{gradient} = \frac{\Delta y}{\Delta x} = \frac{y_2 - y_1}{x_2 - x_1} = \frac{1.90 - 0}{0.50 - 0.06} = 4.3\,\text{A V}^{-1}$$

Substitute the first point and the gradient into the equation $y = mx + c$.

$$0 = (4.3 \times 0.06) + c$$

$$c = -0.26\,\text{A}$$

Evaluation of evidence

During an experiment, you should record any uncertainties in your measurements.

It is important to note that questions on the combination of uncertainties are often set in the theory papers. To find the uncertainty of a combination of variables, the rules are as follows:

- For quantities that are added or subtracted, the absolute uncertainties are added.
- For quantities that are multiplied together or divided, the *fractional* (or *percentage*) uncertainties are added.
- For a quantity that is raised to a power, to calculate a final uncertainty the fractional uncertainty is multiplied by the power.

Worked examples

1 The currents going into a junction are I_1 and I_2. The current coming out of the junction is I. In an experiment the values of I_1 and I_2 are measured as 2.0 ± 0.1 A and 1.5 ± 0.2 A respectively.

Write down the value of I with its uncertainty.

2 The acceleration of free fall g is determined by measuring the period of oscillation T of a simple pendulum of length L. The relationship between g, T and L is given by the formula $g = 4\pi^2(L/T^2)$.

In the experiment, L was measured as 0.55 ± 0.02 m, and T as 1.50 ± 0.02 s.

Find the value of g and its uncertainty.

Answers

1 $I = I_1 + I_2 = (2.0 \pm 0.1) + (1.5 \pm 0.2)$

The quantities are being added so to find the uncertainty the uncertainties of the original quantities are added.

Hence:

$I = 3.5 \pm 0.3$ A

2 $g = 4\pi^2(L/T^2) = 4\pi^2(0.55/1.50^2) = 9.7\ \text{m s}^{-2}$

To find the uncertainties, the second and third rules are applied.

fractional uncertainty in $L = 0.02/0.55 = 0.036$

fractional uncertainty in $T = 0.02/1.50 = 0.013$

fractional uncertainty in $T^{-2} = 2 \times 0.013 = 0.026$

fractional uncertainty in g = fractional uncertainty in L + fractional uncertainty in $T^{-2} = 0.036 + 0.026 = 0.062$

absolute uncertainty in $g = 9.7 \times 0.062 = 0.6$

So $g = 9.7 \pm 0.6\ \text{m s}^{-2}$

It is worth noting that in this example the examiners are looking for the absolute uncertainty, not the percentage uncertainty. If you take the short cut and leave your answer as 9.7 ± 6.2%, you will lose credit. It is also worth noting that it is poor experimental practice to take only one reading and to try to find a value of g from that. You should take a series of readings of T for different lengths L, and then plot a graph of T^2 against L. The gradient of this graph would be equal to $4\pi^2/g$.

To decide if an experiment supports or fails to support a hypothesis, your result should lie within the limits of the percentage uncertainties. To support the hypothesis in the absence of any uncertainty calculations, a good rule of thumb is that the calculated value should lie within 10% of any predicted value.

The following worked examples take you through some of the stages of evaluating evidence.

Worked example 1

In an initial investigation into the time it takes for an ice cube to melt in a beaker of water (Investigation 3 in the table on page 81), the following results are obtained.

Trial 1: initial temperature of the water = 50°C

time taken (t) to melt = 85 s

Trial 2: initial temperature of the water = 80°C

time taken to melt = 31 s

(a) Explain why it is only justifiable to measure the time taken for the ice cube to melt to the nearest second.

(b) Estimate the percentage uncertainty in the measurement of the time in trial 1.

(c) Estimate the percentage uncertainty in the measurement of the time in trial 2.

(d) Why is it more important to calculate the uncertainty in the time rather than in the initial temperature of the water?

Answer

(a) Even though the stopwatch that was used may have measured to the nearest one-hundredth of a second, it was difficult to judge when the last bit of ice disappeared.

(b) Suppose that the absolute uncertainty = ± 5 s.

percentage uncertainty $= \pm \frac{5}{85} \times 100\% = 6\%$

(c) absolute uncertainty = ± 5 s

percentage uncertainty $= \pm \frac{5}{31} \times 100\% = 16\%$

(d) The percentage uncertainty in measuring the temperature of the water is much less than the uncertainty in measuring the time. (± 1 °C, leading to ± 1 to 2%).

This example shows the reasoning in estimating the uncertainty in a measured quantity and how to calculate percentage uncertainty. You might feel that 5 s is rather a large uncertainty in measuring the time. It is at the upper limit, and you might be justified in claiming the uncertainty to be as little as 1 s. Nevertheless, if you try the experiment for yourself, and repeat it two or three times (as you should do with something this subjective), you will find that an uncertainty of 5 s is not unreasonable. The measurement of the initial temperature of the water has a much lower percentage uncertainty as less judgment is needed to make the measurement.

The next stage is to look at how to test whether a hypothesis is justified or not.

Worked example 2

It is suggested that the time taken (t) to melt an ice cube is inversely proportional to θ^2, where θ is the initial temperature of the water in °C.

Explain whether or not your results from Worked example 1 support this theory.

Answer

If $t \propto \frac{1}{\theta^2}$ then $t \times \theta^2$ = constant

Trial 1: $85 \times 50^2 = 213\,000$

Trial 2: $31 \times 80^2 = 198\,400$

difference between the constants = 14 600

percentage difference $= \frac{14\,600}{198\,400} \times 100\% = 7.4\%$

This is less than the calculated uncertainty in the measurement of t (= 16%, for trial 2) so the hypothesis is supported. (See Worked example 1)

Expert tip

A more sophisticated approach in this example would be to consider the combined uncertainties in the raw readings as the limit at which the experiment supports the theory. The theory predicts that t = constant/θ^2, which means that the constant = $t \times \theta^2$. To combine uncertainties on multiplication (or division) the percentage uncertainties are added.

- percentage uncertainty in θ = 2% (see above, the greatest uncertainty is chosen)
- therefore, percentage uncertainty in $\theta^2 = 2 \times 2\% = 4\%$,
- percentage uncertainty in t = 16%
- total uncertainty = 4% + 16% = 20%

There are various ways of tackling this type of problem — this is probably the simplest. Note that it is important to explain fully why the hypothesis is/is not supported. At the simplest level, if the difference between the two calculated values for the constant is greater than the percentage uncertainties in the measured quantities, then the evidence would not support the hypothesis.

Evaluating the experiment

There are two parts to this section:

- identifying weaknesses in the procedure
- suggesting improvements that would increase the reliability of the experiment

Before looking at Worked example 3, try to list *four* weaknesses in the procedure in the previous experiment. Then list *four* improvements that would increase the reliability of the experiment.

Worked example 3

State four sources of error or limitations of the procedure in Investigation 3 — the melting ice experiment.

Answer

(1) Two readings are not enough to make firm conclusions.

(2) The ice cubes may not have the same mass.

(3) There will be some energy exchanges with the surroundings.

(4) The ice cubes might be partly melted before they are put into the water.

Identifying weaknesses in a procedure is not easy but the more practical work you do the better you will become. It is important to be precise when making

your points. In many experiments (not this one!) parallax can lead to errors. It would not be enough to say in an answer 'parallax errors'. You would need to identify where those errors arose. If you were trying to measure the maximum amplitude of a pendulum, you would need to say, 'Parallax errors, when judging the highest point the pendulum bob reaches'.

Having identified the areas of weakness you now need to suggest how they could be rectified. The list given in Worked example 4 is not exhaustive — for example, a suggestion that there should be the same volume of water in the beaker every time would also be sensible. However, a comment regarding measuring the average temperature of the water would not be acceptable as this would make it a different, albeit a perfectly valid, experiment.

If you have not got four weaknesses try writing 'cures' for the weaknesses suggested in Worked example 3.

Worked example 4

Suggest four improvements that could be made to Investigation 3. You may suggest the use of other apparatus or different procedures.

Answer

(1) Take more sets of readings with the water at different temperatures and plot a graph of t against $1/\theta^2$.

(2) Weigh the ice cubes.

(3) Carry out the experiment in a vacuum flask.

(4) Keep the ice cubes in a cold refrigerator until required.

In many ways this is easier than identifying weaknesses but note that you need to make clear what you are doing. The first suggestion is a good example — there is no point in taking more readings unless you do something with them! Note also that the answer makes it clear that it is not just repeat readings that would be taken (that should have been done anyway); it is readings at different water temperatures.

This experiment does not cover all the difficulties you might encounter; for instance in the bouncing ball experiment (Investigation 1), the major difficulty is measuring the height to which the ball bounces. One possible way in which this problem could be solved is to film the experiment and play it back frame by frame or in slow motion.

Whenever you carry out an experiment, think about the weaknesses in the procedure and how you would rectify them. Discuss your ideas with your friends and with your teacher. You will find that you gradually learn the art of critical thinking, which will help you to score highly on this part of the paper.

AS exam-style questions and answers

This section provides a practice examination paper similar to Paper 2. All the questions are based on the topic areas described in this book.

You have 1 hour 15 minutes to complete the paper. There are 60 marks on the paper so you can spend just over 1 minute per mark. If you find that you are spending too long on one question, move on to another that you can answer more quickly. If you have time at the end, then come back to the difficult ones.

Not only will you have to use your knowledge to answer the questions, you must also target each answer to the question. There are two hints to tell you how much you need to write: the space available for the answer and the number of marks. The latter is the better hint. The more marks there are for a question the more points you have to make. As a rough guide, in an explanation or description, 1 mark is awarded for each relevant point made.

Look carefully at exactly what each question wants you to do. For example, if a question asks you to 'State' what happens then you only need to tell the examiner what would happen, without any further explanation. You will not lose marks for giving extra information unless you contradict yourself, but neither will you gain extra credit — all you do is waste precious time. On the other hand, if the question asks you to 'Explain' then you need to say how or why something happens, not just describe what happens. Otherwise, you will lose marks.

At AS a lot of the marks are for quantitative work. In many ways these are easy marks to gain. However, many students throw marks away unnecessarily. You should show each step in your working, and where necessary explain what you are doing. If you make an error and the examiner can see where you have gone wrong, credit may still be given. If the examiner cannot see where you have made a mistake, then he or she cannot give any credit. Working logically, step-by-step, will help you to see what you are doing and will reduce your chances of making errors. It might take a moment or two longer but the rewards are worth it.

Exemplar paper

Question 1

The frequency *f* of a stationary wave on a string is given by the formula:

$$f^k = \frac{T}{4L^2m}$$

where *L* is the length of the string, *T* is the tension in the string, *m* is the mass per unit length of the string and *k* is a dimensionless constant.

(a) State which of the quantities *f*, *L*, *T* and *m* are base quantities. [1]

(b) (i) State the units of *f*, *L*, *T* and *m* in terms of base units. [3]

(ii) By considering the homogeneity of the equation, determine the value of *k*. [2]

[Total: 6]

Answer A

(a) *T* and *m* ✗

The student does not understand the term base quantity. He or she seems to think that it means a quantity that is not raised to a power. Mark: 0/1

Answer A

(b) (i) *f* is in hertz ✗, *L* is in metres ✓, *T* is in newtons ✗ and *m* is in kg m^{-1} ✓.

Again the student shows a lack of understanding of base units. Hertz is a derived unit, the unit of L *is correct, the newton is a derived unit — kg m s^{-2}, the answer for* m *(mass per unit length) is correct. Note that there are four responses required for 3 marks. The student has two correct responses and earns 1 mark. Mark: 1/3*

Answer A

(ii) units of left-hand side of the equation are $\left(\frac{1}{s}\right)^k$

units of right-hand side of the equation are $\frac{N}{m^2}$ kg m^{-1}

$= \frac{\cancel{kg}\,\cancel{m}\,s^{-2}}{\cancel{m^2}\,\cancel{kg}\,\cancel{m^{-1}}}$ ✓

$\left(\frac{1}{s}\right)^k = s^{-2}$, so $k = -2$ ✗

Despite difficulty with base quantities this is done quite well, although it is a shame that the student has got muddled with the negative signs in the last line. Mark: 1/2

Answer B

(a) *L* only ✓

L is the only base unit so the student scores this mark. Mark: 1/1

Answer B

(b) (i) f is in s^{-1} ✓, L is in metres ✓, T is $kg\,m\,s^{-2}$ ✓ and m is in $kg\,m^{-1}$ ✓

All four are correct, for the full 3 marks. Mark: 3/3

Answer B

(ii) units of left-hand side of the equation are $\left(\frac{1}{s}\right)^k$

units of right-hand side of the equation are $\frac{N}{m^2}kg\,m^{-1}$

$= \frac{\cancel{kg}\,\cancel{m}\,s^{-2}}{\cancel{m}\,\cancel{kg^2}}$ ✓

$s^{-k} = s^{-2}$, so $k = 2$ ✓

All correct. Mark: 2/2

Question 2

A builder throws a brick up to a second builder on a scaffold, who catches it. The graph shows the velocity of the brick from when it leaves the hand of the first builder to when the second builder catches it.

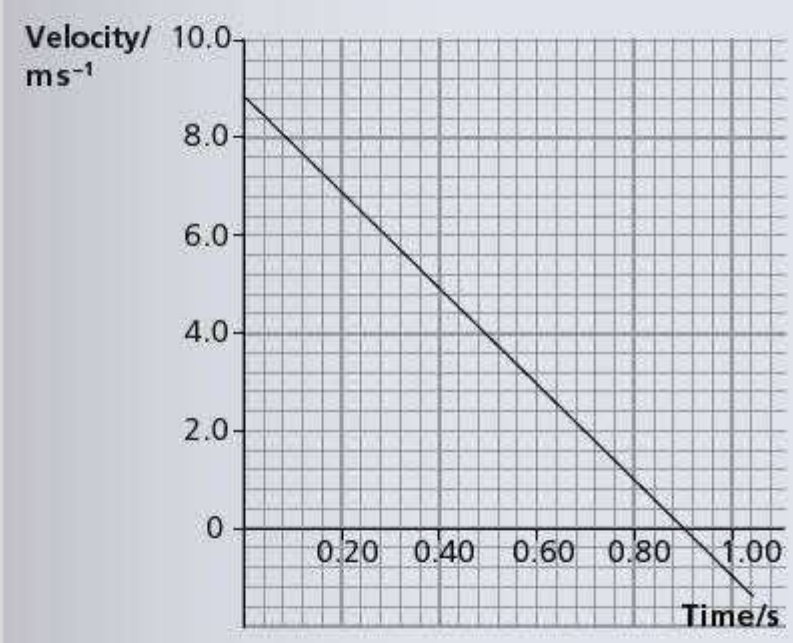

(a) Show that the acceleration is 9.8 m s⁻². [2]

(b) The gradient of the velocity–time graph is negative.
Explain what this shows. [1]

(c) The second builder catches the brick 1.04 s after the first builder released it.
Calculate the height the second builder is above the first builder. [2]

(d) The second builder drops a brick for the builder on the ground to catch.
Suggest why it is much more difficult to catch this brick than the one in the previous case. [1]

[Total: 6]

Answer A

(a) acceleration = gradient of the graph = $\frac{8.8 - 0}{0.90 - 0}$

$= 9.8\,m\,s^{-2}$ ✓✗

The student recognises that the acceleration is equal to the gradient, and correctly identifies suitable points on the graph. However, the lower line of the equation should read (0 – 0.9). A compensation mark is given. Mark: 1/2

Answer A

(b) The brick is slowing down. ✓

This is not a very convincing statement but it is just enough to earn the mark. Mark: 1/1

Answer A

(c) distance = area under the graph

$= (\frac{1}{2} \times 8.8 \times 0.90) +$ ✗ $(\frac{1}{2} \times 1.40 \times 0.14)$ ✓

$= 4.1\,m$

The student recognises that the area under the graph is equal to the distance travelled but unfortunately does not realise that for the last 0.14 s the brick is moving downwards, so the velocity is negative. Nevertheless, it is easy to spot the error so only 1 mark is lost. Mark: 1/2

Answer A

(d) The brick will be moving downwards not upwards. ✗

This is wrong. The brick had started to move downwards in the earlier example. Neither does it answer the question. Mark: 0/1

Answer B

(a) acceleration = gradient of the graph = $\frac{8.8 - 0}{0 - 0.90}$

$= -9.8\,m\,s^{-2}$ ✓✓

All correct. Mark: 2/2

Answer B

(b) The velocity and acceleration are in opposite directions. This shows deceleration ✓.

This is much more convincing than answer A. Mark: 1/1

Answer B

(c) distance = area under the graph

= (½ × 8.8 × 0.90) – (½ × 1.40 × 0.14) ✓

= 3.9 m ✓

All correct. The student has sensibly rounded the answer to two significant figures. Mark: 2/2

Answer B

(d) The brick will be travelling much faster. In the earlier example it is almost stationary when it reaches the builder on the scaffold. ✓

This is a good answer. Mark: 1/1

Question 3

A glider on an air track has a mass of 1.2 kg. It moves at 6.0 m s^{-1} towards a second stationary glider of mass 4.8 kg. The two gliders collide, and the incoming glider rebounds with a speed of 3.6 m s^{-1}.

(a) Show that the speed of the second glider after the collision is 2.4 m s^{-1}. [3]

(b) Show that the collision is elastic. [3]

The gliders are in contact for 30 ms during the collision.

(c) (i) Calculate the average force on the stationary glider during the collision. [2]

(ii) Compare the forces on the two gliders during the collision. [2]

[Total: 10]

Answer A

(a) momentum before the collision = 1.2 × 6.0 = 7.2 kg m s^{-1} ✓

momentum after the collision = (4.8 × 2.4) + (1.2 × 3.6) ✗

= 11.52 + 4.32 = 15.84 kg m s^{-1} ✗

The student earns 1 mark for the correct calculation of the initial momentum. However, there is a failure to recognise that momentum is a vector and direction must be included. Mark: 1/3

Answer A

(b) K.E. before = ½mv^2 = ½ × 1.2 × 6.0 = 3.6 J ✗

K.E. after = ½ × 4.8 × 2.4^2 + ½ × 1.2 × 3.6^2 = 13.824 + 7.776 = 21.6 J ✓

K.E. before the collision = K.E. after the collision? ✓

The student writes down the correct formula for kinetic energy but forgets to square the velocity when calculating the K.E. before the collision. The remainder of the calculation is fine. The final mark is for recognising that the kinetic energy before the collision should be equal to the kinetic energy after the collision. It is even recognised (by the question mark) that something has gone wrong. Mark: 2/3

Answer A

(c) (i) acceleration of glider = $\frac{2.4}{30 \times 10^{-3}}$ = 80 m s^{-2}

$F = ma$ = 4.8 × 80 = 384 ✓✗

(ii) Force is smaller than the other ✗ because the glider is smaller and it is in the opposite direction ✓. Equal to the force on the other glider.

The answer in part (i) is a valid way of calculating the force but this is a case where the student is expected to provide the unit since the answer cue does not provide one. In part (ii) there is recognition that the forces are opposite in direction but not that they are of the same magnitude. Indeed, there is a contradiction in the answer — the student first says that the force is smaller and then that it is equal to the force on the other glider. Mark: 2/4

Answer B

(a) momentum before the collision = 1.2 × 6.0 = 7.2 kg m s^{-1} ✓

momentum after the collision = (4.8 × 2.4) + (1.2 × –3.6) ✓

= 11.52 – 4.32 = 7.2 kg m s^{-1} = momentum before the collision ✓

All correct. Mark: 3/3

Answer B

(b) In elastic collisions kinetic energy is conserved. ✓

K.E. before = ½ × 1.2 × 6.0^2 = 21.6 J ✓

K.E. after = ½ × 4.8 × 2.4^2 + ½ × 1.2 × 3.6^2 = 13.824 + 7.776 = 21.6 J ✓

All correct. Mark: 3/3

Answer B

(c) (i) force = rate of change of momentum

= 4.8 × $\frac{2.4 - 0}{30 \times 10^{-3}}$ ✓

= 384 N ✓

(ii) Force is the same magnitude ✓

This is all correct until the final mark, where the student misses the point that the forces are in opposite directions from each other. Mark: 3/4

Question 4

(a) Explain what is meant by the *moment of a force* about a point. [2]

The diagram shows the principle of a hydraulic jack. A vertical force is applied at one end of the lever, which is pivoted at A. The plunger is pushed down, creating a pressure on the oil, which is pushed out of the master cylinder, through the valve into the slave cylinder.

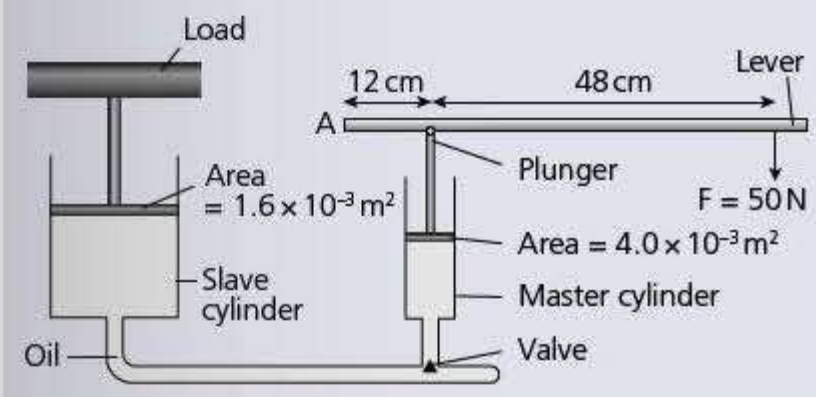

(b) (i) Calculate the force produced on the plunger by the lever. [2]

(ii) Calculate the pressure exerted on the oil by the plunger. [2]

The pressure is transmitted through the oil so that the same pressure is exerted in the slave cylinder.

(c) Calculate the load the jack can support. [1]

(d) Suggest two design changes to the jack so that a larger load could be lifted. [2]

[Total: 9]

Answer A

(a) moment of a force = force × distance from the pivot ✗✗

The student has some idea of the concept of moment but the explanation is poor. There is no reference to the distance being the perpendicular distance from the force to the pivot. Mark: 0/2

Answer A

(b) (i) 50×48 ✗ $= 12F$

$F = 200\,\text{N}$ ✗

(ii) pressure $= \dfrac{\text{force}}{\text{area}} = \dfrac{200}{4 \times 10^{-3}}$ ✓

$= 50\,000\,\text{Pa}$ ✓

The student has not clarified the point that the moments are being taken about. As a result, the distance between the load force and the pivot is wrong. The rest of the calculation is correct. The earlier error is carried forward so both marks for part (ii) are scored. Mark: 2/4

Answer A

(c) load = pressure × area = $50\,000 \times 1.6 \times 10^{-2} = 800\,\text{N}$ ✓

The error is carried forward again, so the mark is scored. Mark: 1/1

Answer A

(d) (i) Make the handle of the lever longer. ✓

(ii) Increase the cross-sectional area of the cylinder. ✗

Part (i) is correct. However, in part (ii) the student does not specify which cylinder's cross-sectional area should be increased. Increasing the area of the master cylinder would have the opposite effect from that required. Mark: 1/2

Answer B

(a) The moment of a force is the magnitude of the force × the perpendicular distance of the force from the point. ✓✓

Correct. Mark: 2/2

Answer B

(b) (i) Take moments about A:

$50 \times 60 = 12F$ ✓

$F = 250\,\text{N}$ ✓

(ii) pressure $= \dfrac{\text{force}}{\text{area}} = \dfrac{250}{4 \times 10^{-3}}$ ✓

$= 62\,500\,\text{Pa}$ ✓

All correct. Mark: 4/4

Answer B

(c) load = pressure × area = $62\,500 \times 1.6 \times 10^{-2} = 1000\,\text{N}$ ✓

Correct. Mark: 1/1

Answer B

(d) (i) Increase the length of the lever. ✓

(ii) Increase the cross-sectional area of the slave cylinder. ✓

Both correct. Mark: 2/2

Question 5

(a) (i) Explain what is meant when two sources of light are described as *coherent* and state the conditions necessary for coherence. [2]

(ii) Explain why two separate light sources cannot be used to demonstrate interference of light. [2]

(b) A Young's slits experiment is set up to measure the wavelength of red light.

The slit separation is 1.2 mm and the screen is 3.0 m from the slits. The diagram shows the interference pattern that is observed. Calculate the wavelength of the light. [2]

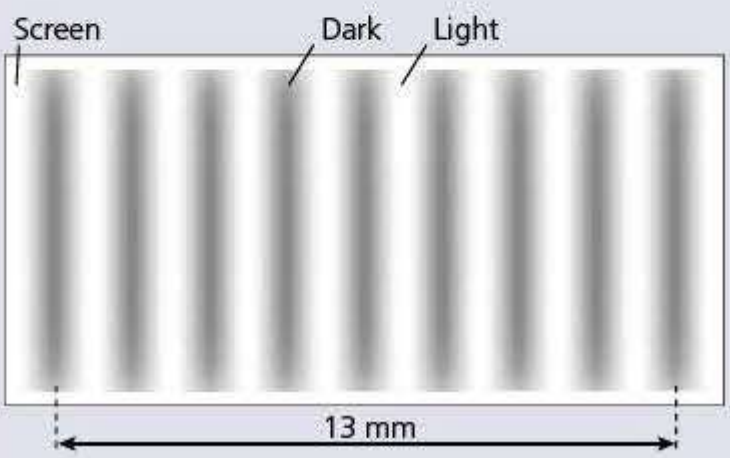

(c) Explain how you would expect the pattern to change if the red light was replaced by a blue light. [2]

[Total: 8]

Answer A

(a) (i) Two sources are coherent if they have no phase difference. ✗✗

This is a common error. Many students ignore the fact that light from two sources can be coherent if there is a phase difference, provided that the phase difference is constant. The necessity for the two sources to have the same frequency is not mentioned. Mark: 0/2

Answer A

(ii) They are not coherent ✓.

The statement is correct and so gains a mark. However, the question asks the student to explain and there is no explanation given as to why the sources are not coherent. Mark: 1/2

Answer A

(b) $n\lambda = ax/D \rightarrow 9\lambda$ ✗ $= 1.2 \times 10^{-3} \times \dfrac{13 \times 10^{-3}}{3\lambda}$

$= 5.8 \times 10^{-7}$ m ✓ (e.c.f.)

The student has counted the nine minima but there are only eight fringes. The rest of the calculation is completed correctly, for 1 mark. Mark: 1/2

Answer A

(c) Blue light has a longer wavelength than red light ✗ so the fringes would be further apart ✓.

The student should be aware that the blue end of the spectrum has the shortest wavelengths of visible light. The correct conclusion has been drawn from the original error, so the second mark is scored. Mark: 1/2

Answer B

(a) (i) Two sources are coherent if they have a constant phase difference ✓. For this, they must have the same frequency ✓.

Correct. Mark: 2/2

Answer B

(ii) Light is not emitted as a single wave train but as short wave trains. The phases of the different wave trains are random ✓, so the wave trains from the two sources are not coherent ✓.

An excellent answer, showing true understanding of coherence. Mark: 2/2

Answer B

(b) $n\lambda = ax/D \rightarrow 8\lambda = 1.2 \times 10^{-3} \times \dfrac{13 \times 10^{-3}}{3}$ ✓

$\lambda = 6.5 \times 10^{-7}$ m ✓

Correct. Mark: 2/2

Answer B

(c) Blue light has a shorter wavelength than red light ✓ so the fringes would be closer together ✓.

This is a good explanation. The student has noted that a reason is needed. Mark: 2/2

Question 6

(a) Explain what is meant by the *electric field strength* at a point. [1]

The diagram shows two parallel plates in an evacuated tube. The earthed plate is heated so as to emit electrons. The plates are 8.0 cm apart, with a potential difference of 2.0 kV across them.

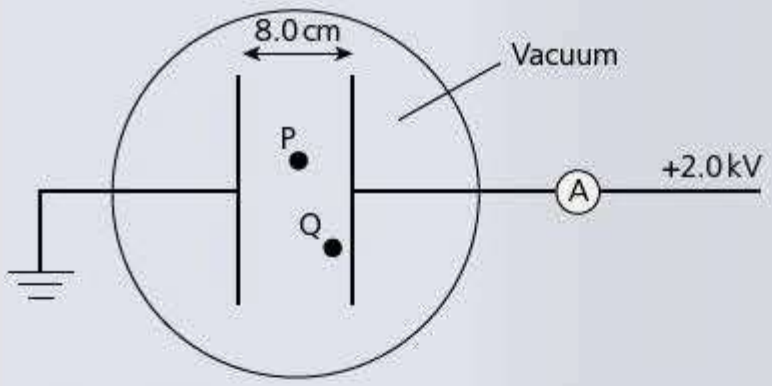

(b) Calculate the electric field strength between the two plates. [2]

(c) (i) An electron is at point P midway between the two plates. Calculate the force on it. [2]

(ii) A second electron is at point Q, near the positive plate. State the force on this electron, giving a reason for your answer. [2]

(d) A current of 2.4 μA is recorded on the ammeter. Calculate the number of electrons that move across from one plate to the other in 1 minute. [2]

[Total: 9]

Answer A

(a) Electric field strength is the force per unit charge. ✗

The student has missed that it should be the force on a positive charge and has also not emphasised that the force is on a point charge placed at that point.

Answer A

(b) $E = \frac{V}{d} = \frac{2000}{8 \times 10^{-2}}$ ✓

$= 25\,000\ \text{N C}^{-1}$ ✓

Correct. N C^{-1} is an alternative unit for electric field strength. Mark: 2/2

Answer A

(c) (i) $E = \frac{F}{Q} \rightarrow 25\,000 = \frac{F}{1.6 \times 10^{-19}}$ ✓

$F = 4 \times 10^{-15}\ \text{N}$ ✓

(ii) $4.0 \times 10^{-15}\ \text{N}$ ✗. The force is stronger because the charge is nearer the positive plate ✗.

Part (i) is correct. However, the response to part (ii) shows that the student does not understand the concept of a uniform field. Mark: 2/4

Answer A

(d) $Q = It$, $= 2.4 \times 10^{-6} \times 60 = 1.44 \times 10^{-4}\ \text{C}$ ✓

The student has correctly calculated the charge that has passed but does not know how to proceed. Mark: 1/2

Answer B

(a) Electric field strength at a point is the force per unit positive charge acting on a stationary point charge placed at that point ✓.

This is a good definition, although it could be further improved by stating that the charge is stationary. Mark: 1/1

Answer B

(b) $E = \frac{V}{d} = \frac{2000}{8 \times 10^{-2}}$ ✓

$= 25\,000\ \text{V m}^{-1}$ ✓

Correct. Mark: 2/2

Answer B

(c) (i) $E = \frac{F}{Q} \rightarrow 25\,000 = \frac{F}{1.6 \times 10^{-19}}$ ✓

$F = 4.0 \times 10^{-15}\ \text{N}$ ✓

(ii) $4.0 \times 10^{-15}\ \text{N}$ ✓. The field is uniform, therefore the force on the charge is the same anywhere between the plates ✓.

All correct. Mark: 4/4

Answer B

(d) $Q = It$

number of electrons × charge on an electron = Q

So: $ne = It$ ✓

$n = 2.4 \times 10^{-6} \times \frac{60}{1.6 \times 10^{-19}} = 9.0 \times 10^{14}$ ✓

All correct. Mark: 2/2

Question 7

(a) Explain the difference between the terminal potential difference and the e.m.f. of a cell. [2]

(b) A student makes a 4.0 Ω resistor by winding 3.9 m of insulated eureka wire of diameter 0.78 mm around a wooden former. Calculate the resistivity of eureka. [2]

(c) When the student connects the resistor across the terminals of a cell of e.m.f. 1.56 V there is a current of 0.37 A. Calculate the internal resistance of the cell. You may assume that the ammeter has negligible resistance. [2]

[Total: 6]

Answer A

(a) The terminal potential difference is numerically equal to the electrical energy converted to other forms of energy when unit charge moves around the circuit from one terminal to the other ✓. The e.m.f. is the terminal potential difference when no current flows ✗.

The first part is answered very well. The second answer, although a good rule of thumb, is not how e.m.f. is defined (see answer B). Mark: 1/2

Answer A

(b) $R = \rho\frac{L}{A} \rightarrow 4 = \rho \times \frac{3.9}{\pi(0.78 \times 10^{-3})^2}$ ✗

$\rho = 1.96 \times 10^{-6}\ \Omega\text{m}$ (e.c.f.) ✓

This is a good attempt, except that the student has failed to divide the diameter by two. This counts as an arithmetic error and is only penalised 1 mark. Cross-sectional area = πr^2. Mark: 1/2

Answer A

(c) $V = IR = 0.37 \times 4 = 1.48$

lost volts = 1.56 − 1.48 = 0.08 V ✓

This is a valid way of doing the problem but after a good start the student does not know how to complete the problem — internal resistance = lost volts/current = 0.08/0.37 = 0.22 Ω. Mark: 1/2

Answer B

(a) The terminal potential difference is numerically equal to the electrical energy converted to other forms of energy when unit charge moves around the circuit from one terminal to the other ✓. The e.m.f. is numerically equal to the energy given to unit charge when it passes through the cell ✓.

An excellent answer. Mark: 2/2

Answer B

(b) $R = \rho\frac{L}{A} \rightarrow 4 = \rho \times \frac{3.9}{\pi\left(\frac{0.78 \times 10^{-3}}{2}\right)^2}$ ✓

$\rho = 4.9 \times 10^{-7}\,\Omega\,\text{m}$ ✓

Correct. Mark: 2/2

Answer B

(c) $E = IR + Ir \rightarrow 1.56 = (0.37 \times 4) + 0.37r$ ✓

$r = 0.22\,\Omega$ ✓

Correct. Mark: 2/2

Question 8

(a) State and explain the difference between leptons and hadrons. [2]

(b) Discuss the changes that occur when β^+ decay occurs. [4]

[Total: 6]

Answer A

(a) Leptons are much lighter than hadrons, which are much heavier.

The student has latched onto 'light' and 'heavy' which, although true, is fairly trivial. There is no mention of the leptons being fundamental particles or of the quarks in the hadrons. Mark: 0/2

Answer A

(b) The weak force ✓ causes a neutron to change into a proton and a positron is emitted.

This shows some understanding. The role of the weak force is included, but the answer lacks the depth that is required. There is no mention of quark changes or the emission of a neutrino. Mark: 1/4

Answer B

(a) Leptons are fundamental particles; hadrons are not ✓.

This is a good start but there is no mention of hadrons having an underlying structure — that they are made of quarks. The term 'explain' is the key, indicating that the examiner is expecting something more than the bold statement that leptons are fundamental and hadrons are not. Mark: 1/2

Answer B

(b) A neutron changes into a proton with the emission of a β^+ particle ✓ and a neutrino ✓. For the neutron to change into a proton an up quark changes into a down quark ✓.

This is a good answer, with virtually all the important points. However the role of the weak interaction is not included. Mark: 3/4

14 Motion in a circle

Kinematics of uniform circular motion

Radian measurement

Revised

You are familiar with the use of degrees to measure angles, with a complete circle equal to 360°. There is no real reason why a circle is split into 360° — it probably arises from the approximate number of days it takes for the Earth to orbit the Sun (Figure 14.1).

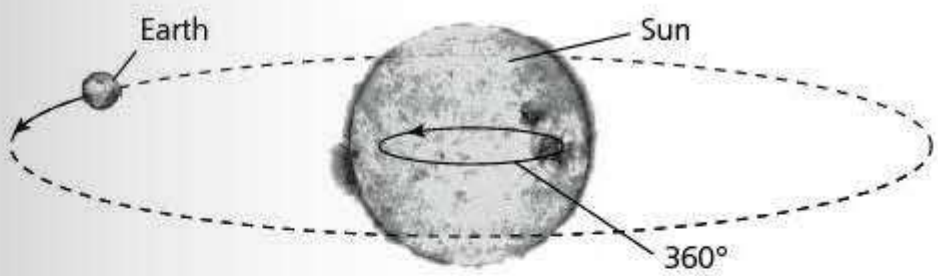

Figure 14.1

It is much more convenient to use **radians**.

$$\text{angle (in radians)} = \frac{\text{arc length}}{\text{radius}}$$

For a complete circle, circumference = $2\pi r$, where r is the radius. Hence, the angle subtended by a complete circle is:

$$360° = \frac{2\pi r}{r} = 2\pi \text{ radians}$$

This can be expressed as:

$$1° = \frac{2\pi}{360} \text{ rad}$$

or:

$$1 \text{ rad} = \frac{360}{2\pi} = 57.3°$$

One **radian** is the angle subtended at the centre of a circle by an arc of length equal to the radius of the circle (Figure 14.2).

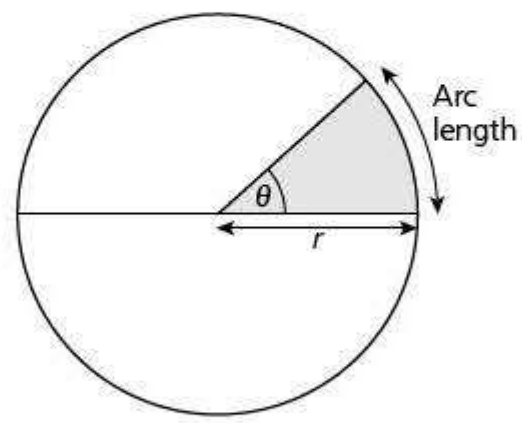

Figure 14.2 When arc length = r, θ = 1 radian

Worked example

(a) Convert the following angles to radians:

(i) 180°

(ii) 60°

(b) Convert the following angles to degrees:

(i) $\frac{\pi}{4}$ rad

(ii) $\frac{2\pi}{3}$ rad

Answer

(a) (i) $180° = 180 \times \frac{2\pi}{360} \text{rad} = \pi \text{ rad}$

(ii) $60° = 60 \times \frac{2\pi}{360} \text{rad} = \frac{\pi}{3} \text{rad}$

(b) (i) $\frac{\pi}{4} \text{rad} = \frac{\pi}{4} \times \frac{360}{2\pi} = 45°$

(ii) $\frac{2\pi}{3} \text{rad} = \frac{2\pi}{3} \times \frac{360}{2\pi} = 120°$

Angular displacement and angular velocity

Revised

Consider a particle moving at constant speed (v) round a circle. The change in angle from a particular reference point is called the **angular displacement** (Figure 14.3).

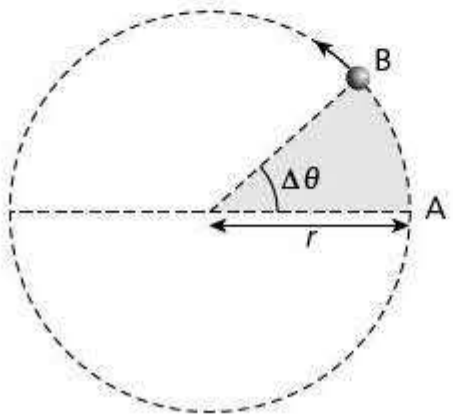

Figure 14.3

Angular displacement is the change in angle (measured in radians) of a body as it rotates round a circle.

As the particle moves round the circle, the angular displacement increases at a steady rate. The rate of change in angular displacement is called the **angular speed** (ω).

Angular speed is the change in angular displacement per unit time:

$$\omega = \frac{\Delta\theta}{\Delta t}$$

Comparison with translational motion

Many of the concepts you met in kinematics at AS have their equivalent in circular motion. This is shown in Table 14.1.

Table 14.1

Translational motion			Circular motion		
Quantity	Unit	Relationships	Quantity	Unit	Relationships
Displacement (s)	m		Angular displacement (θ)	rad	
Speed (v)	$m\,s^{-1}$	$v = \frac{\Delta s}{\Delta t}$	Angular speed (θ)	$rad\,s^{-1}$	$\omega = \frac{\Delta\theta}{\Delta t}$

Look at Figure 14.3.

$$\omega = \frac{\Delta\theta}{\Delta t}$$

but:

$$\Delta\theta = \frac{AB}{r}$$

therefore:

$$\omega = \frac{AB}{r\Delta t}$$

$$\frac{AB}{\Delta t} = \frac{\text{distance travelled}}{\text{time taken}} = v$$

$$\text{so } \omega = \frac{v}{r}$$

or, rearranging the formula:

$$\boldsymbol{v = \omega r}$$

Worked example

A car is travelling round a circular bend of radius 24 m at a constant speed of $15\,m\,s^{-1}$. Calculate the angular speed of the car.

Answer

$$\omega = \frac{v}{r} = \frac{15}{24} = 0.625 \approx 6.3\,rad\,s^{-1}$$

Centripetal acceleration and centripetal force

Constant speed, constant acceleration

Revised

You have already seen how a body can move at constant speed around a circle, but what is meant when it is said that the body has a constant acceleration? To understand this you must remember the definition of acceleration: the change in velocity per unit time. Velocity, unlike speed, is a vector and so a change in direction is an acceleration (Figure 14.4).

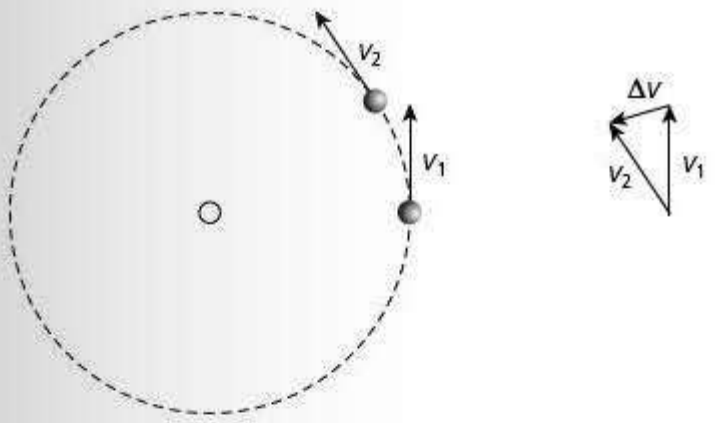

Figure 14.4

Consider a particle moving round a circle. At time t it has a velocity of v_1. After a short interval of time, Δt, it has the velocity v_2 — the same magnitude, but the direction has changed. Figure 14.4 shows the change of velocity Δv. You can see that this is towards the centre of the circle, the acceleration being $\Delta v/\Delta t$. As the body moves round the circle, the direction of its velocity is continuously changing, the change always being towards the centre of the circle. Thus the particle has an acceleration of constant magnitude but whose direction is always towards the centre of the circle. Such an acceleration is called a **centripetal acceleration**.

The magnitude of the acceleration a is given by:

$$a = \frac{v^2}{r} = \omega^2 r$$

Centripetal force and acceleration

Revised

A body travelling round a circle at constant speed is *not* in equilibrium. From Newton's laws you will remember that for a body to accelerate, a resultant force must act on it. The force must be in the same direction as the acceleration. Hence the force is always at right angles to the velocity of the body, towards the centre of the circle (a centripetal force). Such a force has no effect on the magnitude of the velocity; it simply changes its direction.

Typical mistake

It is often thought that a body rotating around a circle at constant speed is in equilibrium — just remember that it changes direction continuously, hence there is a continual force on it.

Using the relationship $F = ma$ (where F = force and m = mass of the body) you can see that the force can be calculated from:

$$F = \frac{mv^2}{r} = m\omega^2 r$$

Figure 14.5(a) shows a rubber bung being whirled round on a string. The string is under tension.

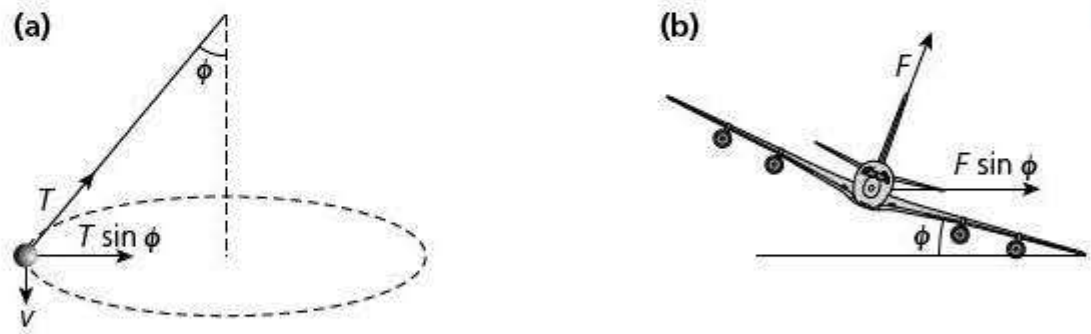

Figure 14.5

The centripetal force is the component of the tension in the horizontal direction ($T \sin \phi$).

$$F = \frac{mv^2}{r} = T \sin \phi$$

In Figure 14.5(b) the uplift on the aeroplane is perpendicular to the wings. When the aeroplane banks there is a horizontal component to this, which provides a centripetal force ($F \sin \phi$) and the plane moves along the arc of a circle.

$$\frac{mv^2}{r} = F \sin \phi$$

Revision activity

- You should be able to develop many equations from more fundamental equations. Some of these fundamental equations are given at the beginning of the examination paper. Others you must learn by heart. It is a good idea to write out these equations on a piece of card and stick the card on the bedroom mirror to learn them by heart. In this topic the 'must-learn' equations are:

$$\omega = \frac{\Delta\theta}{\Delta t}$$

$$\omega = \frac{v}{r}$$

$$a = \frac{v^2}{r} = \omega^2 r$$

$$F = \frac{mv^2}{r} = m\omega^2 r$$

Worked example

Figure 14.6 shows a racing car rounding a bend of radius 120 m on a banked track travelling at 32 m s^{-1}.

(a) Calculate the angle ϕ when there is no tendency for the car to move either up or down the track. You may treat the car as a point object.

(b) Suggest and explain what would happen if the car's speed was reduced.

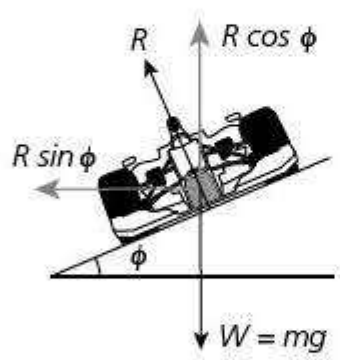

Figure 14.6

Answer

(a) R is the normal reaction force.

Resolving vertically:

$R \cos \phi = mg$

Resolving horizontally:

$$R \sin \phi = \frac{mv^2}{r}$$

Dividing the two equations:

$$\frac{\sin \phi}{\cos \phi} = \frac{\cancel{m}v^2/r}{\cancel{m}g}$$

$$\tan \phi = \frac{v^2}{gr} = \frac{32^2}{9.8 \times 120} = 0.871$$

$\phi = 41°$

(b) The car would tend to slip down the slope as the required centripetal force would be less. In practice, frictional forces would probably mean that it would continue in a circle of the same radius.

Expert tip

The racing car is clearly not a point object but modelling it as one simplifies the problem. The normal reaction is, in reality, shared at each of the four wheels. The wheels on the outside of the curve travel in a larger circle than those on the inside of the circle, further complicating the picture. Engineers and scientists often use simplified models, which they then develop to solve more complex problems.

Revision activity

- Explain why this statement made in a newspaper report is *incorrect*:

  'The racing car hit a patch of oil as it came into the bend and the centrifugal force threw the car into the gravel trap.'

  See if your teacher agrees with your explanation.

Now test yourself

1 Convert 120° into radians.

2 Convert $\frac{\pi}{6}$ radians into degrees.

3 A car of mass 800 kg goes round a bend at a speed of 15 m s^{-1}. The path of the car can be considered to be an arc of a circle of radius 25 m. Calculate **(a)** the angular speed of the car and **(b)** the centripetal force on the car.

Answers on p.215

Tested

15 Gravitational fields

A gravitational field is a region around a body (that has mass), in which another body with mass experiences a force.

Gravitational field strength

Revised

Any object near the Earth's surface is attracted towards the Earth with a force that is dependent on the mass of the body. Similarly, an object near the Moon is attracted towards the Moon's surface but now the force is smaller. The reason for this is that the **gravitational field strength** is greater near the Earth than it is near the Moon.

Gravitational field strength at a point is defined as the gravitational force per unit mass at that point.

force = mass × gravitational field strength

In symbols:

$F = mg$

You might remember g as the acceleration due to gravity or acceleration of free fall but if you compare the formulae $F = ma$ and $F = mg$, you can see that the acceleration due to gravity and the gravitational field strength are the same thing.

The gravitational field strength near the Earth's surface is uniform (Figure 15.1).

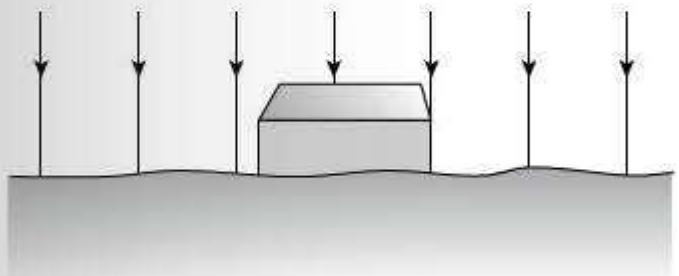

Figure 15.1

Gravitational forces between point masses

It is not just large objects that attract each other — all masses have a gravitational field. This means that they attract other masses (Figure 15.2).

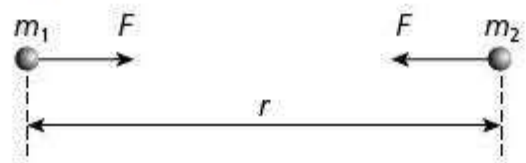

Figure 15.2

Two point masses of mass m_1 and m_2 separated by a distance r will attract each other with a force given by the formula:

$$F = -G\frac{m_1 m_2}{r^2}$$

where G is a constant known as the universal gravitational constant. Its value is $6.67 \times 10^{-11}\ \mathrm{N\,m^2\,kg^{-2}}$. This is known as Newton's law of gravitation. The minus sign in the equation shows the vector nature of the force.

Although slightly more complex for bodies of finite size, all the mass of any object can be considered to act at a single point, which is called its **centre of mass**. This simplifies the maths and in effect the object is treated as a point mass. However, you must be careful to remember to measure any distances between objects as the distance between their centres of mass. Note that the formula above assumes that planets can be treated as point objects.

Worked example

Two spheres of radius 0.50 cm and masses 150 g and 350 g are placed so that their centres are 4.8 cm apart.

(a) Calculate the force on the 150 g sphere.

(b) Write down the force on the 350 g sphere.

Answer

(a) 350 g = 0.35 kg, 150 g = 0.015 kg, 4.8 cm = 0.048 m

$$F = -G\frac{m_1 m_2}{r^2} = \frac{-6.67 \times 10^{-11} \times 0.35 \times 0.15}{0.048^2} = -1.5 \times 10^{-9}\,\text{N}$$

(b) In accordance with Newton's third law, the magnitude of the force on the 350 g mass will also be -1.5×10^{-9} N but in the opposite direction.

Expert tip

This shows how small the gravitational attraction between two small objects is. It is only when we consider planet-sized objects that the forces become significant.

Gravitational fields of point masses

Revised

The gravitational field strength has already been defined as the gravitational force per unit mass at that point.

At AS, you only considered gravitational fields on large objects such as the Earth and other planets, and then only near their surfaces. Under these circumstances, the field may be considered uniform. However, the gravitational field of a point object is radial (Figure 15.3a). This is also true for any body of finite size if we move a significant distance from the body. In the latter case, the radial field is centred on the centre of mass of the body (Figure 15.3b).

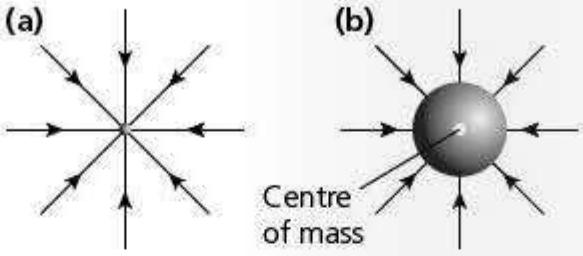

Figure 15.3 The gravitational field of (a) a point mass and (b) a body of finite size

You can see from Figure 15.3 that the lines of gravitational force get further apart as the distance from the centre of mass increases. This shows that the field strength decreases with increasing distance from the body.

Consider the equation for the gravitational force between two objects and the definition of gravitational field strength:

$$F = -G\frac{m_1 m_2}{r^2} \text{ and } g = \frac{F}{M}$$

$$g = -\frac{GM}{r^2}$$

The equation shows an **inverse square** relationship (Figure 15.4). This means if the distance from the mass is doubled the field decreases by a factor of 4 (2^2).

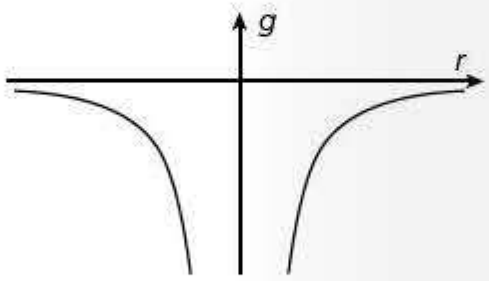

Figure 15.4 The gravitational field near a spherical body

Worked example

Calculate the gravitational field strength at the surface of Mars.

(radius of Mars = 3.4×10^3 km, mass of Mars = 6.4×10^{23} kg)

Answer

3.4×10^3 km = 3.4×10^6 m

$$F = -\frac{GMm}{r^2} \text{ and } g = \frac{F}{m}$$

$$g = -\frac{GM}{r^2} = -\frac{6.67 \times 10^{-11} \times 6.4 \times 10^{23}}{(3.4 \times 10^6)^2} = -3.7\,\text{N kg}^{-1}$$

The magnitude of the gravitational field strength is 3.7 N kg^{-1} towards the centre of Mars.

Orbital mechanics

Revised

Figure 15.5 shows a satellite travelling in a circular orbit around the Earth.

The gravitational pull on the satellite provides the centripetal force to keep the satellite in orbit.

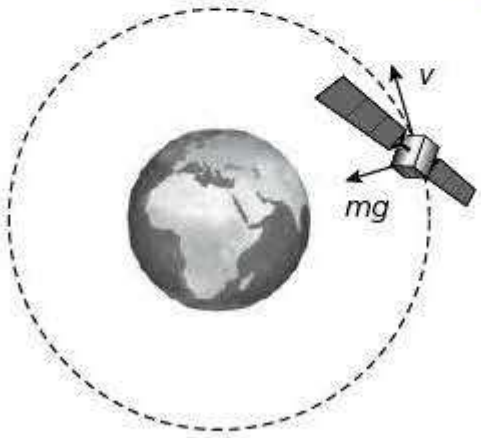

Figure 15.5

Centripetal force:

$$F = \frac{mv^2}{r} = G\frac{Mm}{r^2}$$

where M is the mass of the Earth. Cancelling m and r:

$$v^2 = \frac{GM}{r}$$

which can be rewritten as:

$$v = \sqrt{\frac{GM}{r}}$$

This can also be expressed in terms of angular velocity, ω:

$$v = \omega r$$

Therefore:

$$\omega = \sqrt{\frac{GM}{r^3}}$$

You can see that the angular velocity, and hence the frequency and the period for one orbit, are dependent on the orbital radius.

The relationship between the period T for one orbit and the angular velocity ω is:

$$T = \frac{2\pi}{\omega}$$

and that between the frequency f and the period is:

$$f = \frac{1}{T}$$

Worked example

A satellite is to be placed in a polar orbit 100 km above the Earth's surface.

Calculate:

(a) the period of the orbit

(b) the speed of the satellite

(mass of Earth = 6.0×10^{24} kg, radius of Earth = 6.4×10^3 km)

Answer

(a) orbital radius of the satellite = Earth's radius + height of the satellite above the surface

$= (6.4 \times 10^3 + 100) = 6.5 \times 10^3\,\text{km} = 6.5 \times 10^6\,\text{m}$

$$\omega = \sqrt{\frac{GM}{r^3}} = \sqrt{\frac{6.67 \times 10^{-11} \times 6.0 \times 10^{24}}{(6.5 \times 10^6)^3}} = 1.25 \times 10^{-3}\,\text{rad s}^{-1}$$

$$T = \frac{2\pi}{\omega} = \frac{2\pi}{1.25 \times 10^{-3}} = 5.0 \times 10^3\,\text{s} = 1.4\,\text{h}$$

(b) $v = \omega r$

orbital radius = 6.5×10^3 km

$v = 1.2 \times 10^{-3} \times 6.5 \times 10^3 = 7.8\,\text{km s}^{-1}$

Geostationary orbits

Revised

Imagine a satellite that is orbiting the Earth. Its orbital path is directly above the equator. If the satellite orbits in the same direction as the Earth spins and has an orbital period of 24 hours, it will remain over the same point above the Earth's surface. This type of orbit is used for communication satellites (Figure 15.6).

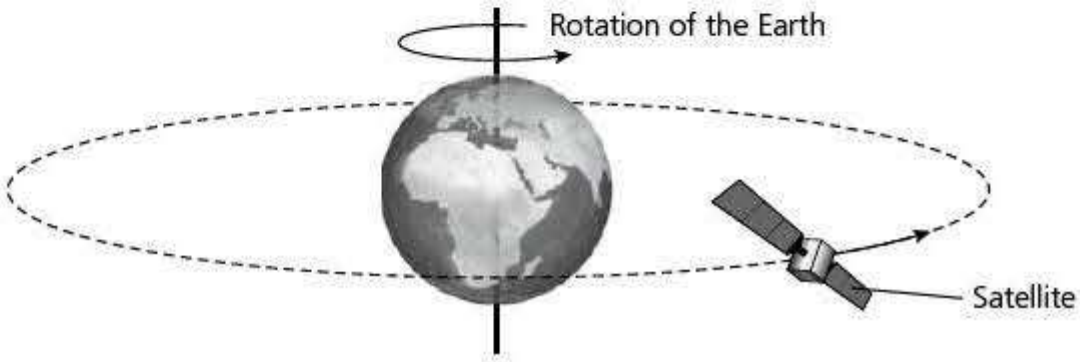

Figure 15.6 A satellite in geostationary orbit above the Earth

From the previous work you should be able to see that there is only one possible orbital radius for this type of satellite. With many countries requiring communications satellites, this means that a great deal of international cooperation is required.

Worked example

Calculate the height above the Earth that a satellite must be placed for it to orbit in a geostationary manner.

(mass of Earth = 6.0×10^{24} kg, radius of Earth = 6.4×10^{6} m)

Answer

Time period required for a geostationary orbit is 24 h = 86 400 s

$$\omega = \frac{2\pi}{T}$$

$$\omega = \sqrt{\frac{GM}{r^3}}$$

$$\text{so } \frac{2\pi}{T} = \sqrt{\frac{GM}{r^3}}$$

and

$$r^3 = \frac{GMT^2}{(2\pi)^2} = \frac{6.67 \times 10^{-11} \times 6.0 \times 10^{24} \times 86\,400^2}{4\pi^2} = 7.57 \times 10^{22}$$

$$r = \sqrt[3]{7.57 \times 10^{22}} = 4.23 \times 10^{7}$$

This is the radius of the satellite's orbit. The radius of the Earth is 6.4×10^{6} m, so the height of the satellite above the Earth's surface is:

$$42.3 \times 10^{6} - 6.4 \times 10^{6} = 3.59 \times 10^{7}\text{ m} \approx 3.6 \times 10^{7}\text{ m}$$

Gravitational potential

Potential at a point

Revised

From earlier work you will be familiar with the idea that the gain in gravitational potential energy of a body when it is lifted through a height Δh is given by the formula:

$$\Delta W = mg\Delta h$$

This formula gives the change in gravitational potential energy. At what point does a body have zero potential energy? It is up to physicists to define the point

at which a body has zero gravitational potential energy. It might seem sensible to choose the Earth's surface as this point. However, if we are considering work on the astronomical scale you can quickly see that this has no special significance. The point that is chosen is infinity — we say that the gravitational potential energy at an infinite distance from any other body is zero. This might seem a little difficult to start with; we know that a body loses potential energy as it approaches the Earth or other large body — therefore it has less than zero potential energy. This means that it has negative potential energy when it is near another body such as the Earth.

By considering the potential energy of a unit mass, we can assign each point in space a specific gravitational potential (ϕ).

Figure 15.7 shows that the gravitational potential at the surface of the body is negative, and how the potential increases towards zero as we move away from the body. Gravitational potential is defined as follows:

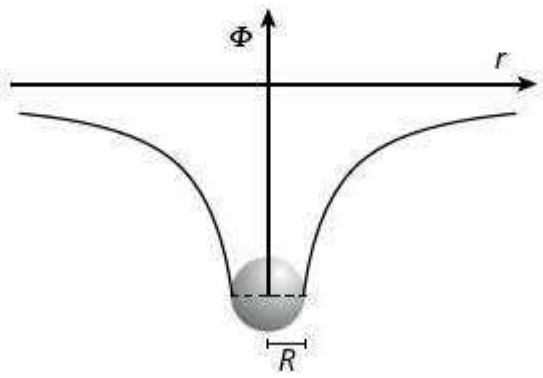

Figure 15.7 The gravitational potential near a body of radius R

The **gravitational potential** at a point is the work done in bringing unit mass from infinity to that point.

Solving problems

Revised

A careful study of the potential curve shows it to be of the form $\phi \propto 1/r$.

The formula for calculating the gravitational potential at a point is:

$$\phi = -\frac{GM}{r}$$

where r is the distance from the centre of mass of the object.

Worked example

If a body is fired from the Earth's surface with sufficient speed, it can escape from the Earth's gravitational field.

(a) Calculate the potential at the Earth's surface.

(b) State and explain how much energy a body of unit mass would need to be given to escape from the Earth's field.

(c) Calculate the minimum speed at which the body must be fired to escape.

Answer

(a) $\phi = -\frac{GM}{r} = -\frac{-6.67 \times 10^{-11} \times 6.0 \times 10^{24}}{6.4 \times 10^{6}} = -6.25 \times 10^{7}\,\text{J kg}^{-1}$

(b) 6.25×10^{7} J, the energy required to reach infinity, zero potential energy.

(c) $E_k = \frac{1}{2}mv^2$, which leads to:

$$v = \sqrt{\frac{2E_k}{m}} = \sqrt{\frac{2 \times 6.25 \times 10^{7}}{1}} = 1.1 \times 10^{4}\,\text{m s}^{-1}$$

Revision activities

- Use the internet to find the orbit period of the International Space Station. Use the information to find the height above the Earth at which it orbits. Check this figure from another internet source.
- Must-learn equation:

$$g = -\frac{GM}{r^2}$$

Now test yourself

Tested

1 Calculate the gravitational attraction between the Earth and the Moon. (mass of the Earth = 6.0×10^{24} kg, mass of the Moon = 7.3×10^{22} kg, separation of the Earth and Moon = 3.8×10^{8} m)

2 Calculate the gravitational potential at the Moon's surface. (radius of the Moon = 1.74×10^{6} m)

3 Use your answer to question 2 to calculate the escape velocity from the Moon's surface.

4 During the Moon landings in the 1970s, the command module orbited the Moon at 100 km above the lunar surface. Calculate the period of this orbit.

Answers on p.215

16 Ideal gases

The mole and the Avogadro constant

Revised

You are already familiar with the idea of measuring mass in kilograms and thinking of mass in terms of the amount of matter in a body. The **mole** measures the amount of matter from a different perspective — the number of particles in a body.

> One **mole** is the amount of substance that has the same number of particles as there are atoms in 12 g of carbon-12 isotope.

The amount of matter is a base quantity and the mole, consequently, is a base unit. The abbreviation (unit) for the mole is **mol**.

The number of atoms in 12 g of carbon-12 is 6.02×10^{23}. This number is referred to as the **Avogadro constant** (N_A) and is written as $6.02 \times 10^{23}\,\text{mol}^{-1}$.

So:

- One mole of carbon-12 isotope contains 6.02×10^{23} carbon-12 atoms and has a mass of 12 g.
- One mole of helium-4 isotope contains 6.02×10^{23} helium-4 atoms and has a mass of 4 g.

Many gases are found not as single atoms but as diatomic molecules. For example, two hydrogen atoms form a H_2 molecule, so one mole of hydrogen contains 6.02×10^{23} hydrogen (H_2) molecules (or 12.04×10^{23} atoms of hydrogen).

Worked examples

1 Calculate the number of atoms in, and the mass of, the following:

(a) 1 mol of ozone (O_3)

(b) 3 mol of water (H_2O)

(relative atomic mass of oxygen = 16, relative atomic mass of hydrogen = 1)

2 The mass of 1 mol of hydrogen gas is 2 g. Calculate the mass of 1 hydrogen atom.

Answers

1 **(a)** 1 mol of ozone contains 6.02×10^{23} molecules $= 3 \times 6.02 \times 10^{23}$ atoms $= 18.06 \times 10^{23}$ atoms $\approx 18.1 \times 10^{23}$ atoms

mass of ozone in 1 mol = $3 \times 16 = 48$ g

(b) Each molecule of water contains 3 atoms (2 hydrogens, 1 oxygen).

number of atoms in 1 mol of water $= 3 \times 6.02 \times 10^{23} = 18.06 \times 10^{23}$ atoms

number of atoms in 3 mol of water $= 3 \times 18.06 \times 10^{23} \approx 5.42 \times 10^{24}$ atoms

1 mol of water has mass = $(2 \times 1) + (1 \times 16) = 18$ g

Therefore the mass of 3 moles = $3 \times 18 = 54$ g

2 1 mol of hydrogen gas contains $2 \times 6.02 \times 10^{23}$ hydrogen atoms.

mass of 1 hydrogen atom $= \dfrac{2}{2 \times 6.02 \times 10^{23}} = 1.66 \times 10^{-24}$ g $= 1.66 \times 10^{-27}$ kg

Equation of state

The ideal gas equation

Revised

Experimental work shows that a fixed mass of any gas, at temperatures well above the temperature at which it condenses to form a liquid, and over a wide range of pressures, follows the following relationships:

- at constant temperature — $p \propto \frac{1}{V}$
- at constant pressure — $V \propto T$
- at constant volume — $p \propto T$

where p = pressure, V = the volume and T is the temperature measured on the Kelvin scale. The Kelvin scale of temperature is discussed further on page 112.

These three relationships can be combined to form a single equation:

$$\frac{pV}{T} = \text{constant}$$

The equation can be written as:

$$\boldsymbol{pV = nRT}$$

where n is the number of moles of gas and R is the **molar gas constant**. This equation is known as the equation of state for an ideal gas.

The **molar gas constant** has the same value for all gases, $8.31\,\text{J K}^{-1}$.

An ideal gas would follow this equation at all temperatures and pressures. Real gases, such as hydrogen, helium and oxygen, follow the equation at room temperature and pressure. However, if the temperature is greatly decreased or the pressure is very high they no longer behave in this way.

Worked examples

1 A syringe of volume $25\,\text{cm}^3$ holds hydrogen at a pressure of $1.02 \times 10^5\,\text{Pa}$ and temperature 280 K. The volume of the gas is reduced to $10\,\text{cm}^3$ and the temperature increases by 5 K. Calculate the new pressure of the gas.

2 Calculate the volume occupied by 48 mg of oxygen at 20°C and a pressure of $1.0 \times 10^5\,\text{Pa}$. (relative atomic mass of oxygen = 16)

Answers

1 $\frac{pV}{T}$ = constant can be rewritten as $\frac{p_1V_1}{T_1} = \frac{p_2V_2}{T_2}$

Substitute in the values:

$$\frac{1.02 \times 10^5 \times 25}{280} = \frac{p_2 \times 10}{285}$$

so $p_2 = 2.6 \times 10^5\,\text{Pa}$

2 temperature = 273 + 20 = 293 K

oxygen forms diatomic O_2 molecules, so the mass of 1 mol of oxygen = 32 g

number of moles in 48 mg = $\frac{48 \times 10^{-3}}{32} = 1.5 \times 10^{-3}\,\text{mol}$

Using $pV = nRT$:

$$V = \frac{nRT}{p} = \frac{1.5 \times 10^{-3} \times 8.3 \times 293}{1.0 \times 10^5} = 3.7 \times 10^{-5}\,\text{m}^3$$

Kinetic theory of gases

Brownian motion and model of a gas

Revised

A gas may be modelled as consisting of many tiny, unbreakable particles (or molecules) which move randomly and independently of each other, except when they collide. The molecules will also collide with the container walls producing pressure.

The first real evidence for the movement of particles in a fluid is Brownian motion. Small particles (such as smoke particles) suspended in a gas (such as air) can be seen to move in a random zigzag fashion. This is due to the particles being bombarded by the very much smaller molecules of the fluid.

Revision activities

- Look up experiments that demonstrate Brownian motion in a liquid and in a gas. Be aware of the required experimental set-up and make sure you can identify both the particles that bombard and the particles that are bombarded.
- Explain why the visible particles move in a random zigzag manner?
- Explain why the particles that do the bombarding are not visible using simple laboratory equipment?

Relationship between molecule speed and pressure exerted

Revised

To show the relationship between the speed of the molecules in a gas and the pressure it exerts, the following assumptions are made:

- The forces between molecules are negligible (except during collisions).
- The volume of the molecules is negligible compared with the total volume occupied by the gas.
- All collisions between the molecules and between the molecules and the container walls are perfectly elastic.
- The time spent in colliding is negligible compared with the time between collisions.
- There are many identical molecules that move at random.

Expert tip

These assumptions effectively describe an ideal gas.

Consider a gas molecule of mass m in a cubic box of side L travelling at speed c parallel to the base of the box (Figure 16.1).

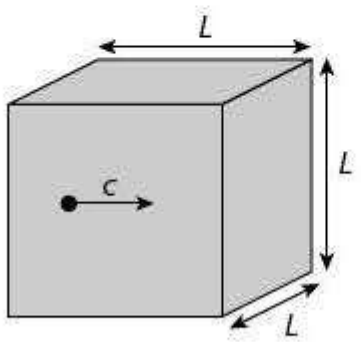

Figure 16.1

When the molecule collides with the right-hand wall it will rebound with velocity $-c$.

change in momentum = $-2mc$

The molecule travels a distance of $2L$ before colliding with that wall again, so the time elapsed is $2L/c$.

rate of change of momentum = force applied by the molecule on this wall

$$= \frac{2mc}{2L/c} = \frac{mc^2}{L}$$

The area of the wall is L^2, so:

$$\text{pressure} = \frac{\text{force}}{\text{area}} = \frac{mc^2}{3L^3}$$

The molecule being considered is moving perpendicular to the two faces with which it collides. In practice, a typical molecule moves randomly and collides

with all six faces. So the total area involved is three times that which has been considered, so:

$$\text{pressure} = \frac{mc^2}{3L^3}$$

The total number of molecules in the box is N, each with a different speed c contributing to the overall pressure. The average of the velocities squared is called the mean square velocity, $\langle c^2 \rangle$.

So:

$$\text{pressure} = \frac{1}{3}\frac{Nm\langle c^2\rangle}{L^3}$$

$L^3 = V$, the volume of the box.

$$p = \frac{1}{3}\frac{Nm\langle c^2\rangle}{V}$$

It is sometimes useful to write this equation as:

$$pV = \frac{1}{3}Nm\langle c^2\rangle$$

Worked example

At room temperature and pressure (293 K and 1.0×10^5 Pa), 1 mol of any gas occupies a volume of 24 dm^3.

Calculate the root mean square velocity of the following at this temperature:

(a) helium atoms (atomic mass = 4 u)

(b) oxygen molecules (atomic mass = 16 u, mass of O_2 = 32 u)

Answer

(a) Nm = total mass of 1 mol of helium = 4×10^{-3} kg

$$p = \frac{1}{3}\frac{Nm\langle c^2\rangle}{V}$$

$$\langle c^2\rangle = \frac{3pV}{Nm} = \frac{3 \times 1.0 \times 10^5 \times 24 \times 10^{-3}}{4 \times 10^{-3}} = 1.8 \times 10^5\, m^2 s^{-2}$$

$$\sqrt{\langle c^2\rangle} = 1342\, m s^{-1} = 1300\, m s^{-1} \text{ (2 s.f.)}$$

(b) Nm = total mass of 1 mol of O_2 molecules = 3.2×10^{-2} kg

$$\langle c^2\rangle = \frac{3pV}{Nm} = \frac{3 \times 1.0 \times 10^5 \times 24 \times 10^{-3}}{3.2 \times 10^{-3}} = 2.25 \times 10^5\, m^2 s^{-2}$$

$$\sqrt{\langle c^2\rangle} = 470\, m s^{-1}$$

Expert tip

The root mean square velocity is the square root of the mean (or average) of the squares of the velocities.

Kinetic energy of a molecule

Temperature and molecular kinetic energy

Revised

If you compare the ideal gas equation ($pV = nRT$) and the equation $pV = \frac{1}{3}Nm\langle c^2\rangle$ you can see that:

$$nRT = \tfrac{1}{3}Nm\langle c^2\rangle$$

For one mole:

$$\frac{R}{N_A} = \frac{1}{3}Nm\langle c^2\rangle$$

$$kT = \tfrac{1}{3}m\langle c^2\rangle$$

and so

$$\boldsymbol{\frac{3}{2}kT = \tfrac{1}{2}m\langle c^2\rangle}$$

The Boltzmann constant (k) = $\frac{R}{N_A}$.

It has the value 1.38×10^{-23} J K^{-1}.

$\frac{1}{2}m\langle c^2\rangle$ is equal to the average (translational) kinetic energy of a molecule. Hence the temperature is proportional to the average (translational) kinetic energy of the particles in a monatomic gas.

Now test yourself

Tested

1 An ideal gas is held in a syringe of volume 200 cm^3 at a pressure of 4.5×10^5 Pa. The is allowed to expand until it reaches a pressure of 1.02×10^5 Pa. As the gas expands its temperature falls from 300 K to 280 K. Calculate the volume the gas will now occupy.

2 The pressure in a helium-filled party balloon of volume of 0.060 m^3 is 0.12 MPa at a temperature of 22°C. Calculate **(a)** the number of moles of helium and **(b)** the mass of helium in the balloon.

3 Calculate the root mean square velocity of nitrogen molecules at 0°C. (mass of nitrogen molecule = 4.6×10^{-26} kg)

Answers on p.215

Revision activity

- The relationship between temperature and kinetic energy only works precisely for an ideal gas. For a monatomic gas it works well, but less well for diatomic or triatomic gases. Suggest explanations for these facts.
- Must-learn equations:

$$pV = nRT$$

$$\frac{3}{2}kT = \frac{1}{2}m\langle c^2\rangle$$

$$\frac{R}{N_A} = \frac{1}{3}Nm\langle c^2\rangle$$

17 Temperature

Thermal equilibrium

What is temperature?

Revised

You have been using the idea of temperature for many years and will have an instinctive feeling about its meaning. However, that instinctive feeling may not be fully correct. You saw in the last topic that temperature is proportional to the average kinetic energy of the particles in a body. To take this a stage further, temperature tells us the direction in which there will be a net energy flow between bodies in thermal contact: energy will tend to flow from a body at high temperature to a body at a lower temperature. If there is no net energy flow between two bodies in thermal contact, then those two bodies are at the same temperature. They are said to be in **thermal equilibrium**.

Figure 17.1(a) shows that if body A is at a higher temperature than B and if body B is at a higher temperature than body C, then body A is at a higher temperature than body C.

Figure 17.1(b) shows that if body P is in thermal equilibrium with body Q and if body Q is in thermal equilibrium with body R, then body P is in thermal equilibrium with body R.

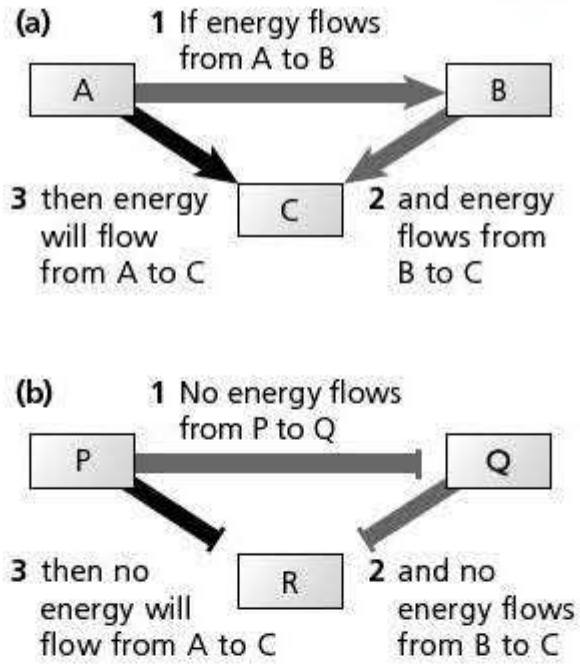

Figure 17.1 The energy flow between different bodies in thermal contact

Temperature scales

Measurement of temperature

Revised

To measure temperature, a physical property that varies with temperature is used. Examples are:

- expansion of a liquid
- expansion of a gas at constant pressure
- change of pressure of a gas at constant volume
- change in resistance of a thermistor or other semiconductor
- e.m.f. produced across the junctions of a thermocouple

Electrical thermometers

Thermocouple

Figure 17.2 shows the structure of a thermocouple. The wires need not be copper and iron — any two different metals can be used. When the two junctions are at different temperatures, an e.m.f. is produced, which is measured by the voltmeter. The e.m.f. increases with increasing temperature difference. It might not change linearly with temperature, in which case a calibration graph will have to be used (see page 17).

In practice, one junction is kept at a constant temperature, perhaps in melting ice, while the other acts as the 'test junction'.

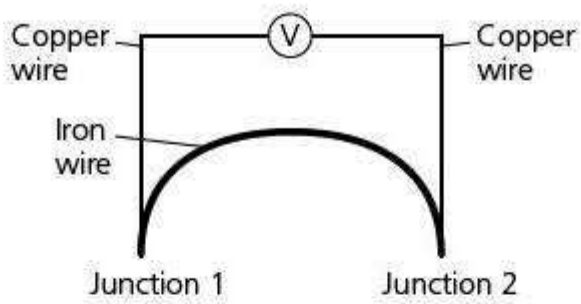

Figure 17.2

Thermistor

A thermistor is a semiconducting device, the resistance of which decreases rapidly with increasing temperature. The thermistor's resistance is not directly proportional to the temperature, so a calibration graph must be used.

The thermodynamic, or Kelvin, temperature scale

Revised

All temperature scales require two fixed points that are easily repeatable. For example, the Celsius scale uses the melting point of pure water as the lower fixed point (0 °C) and the boiling point of pure water at standard atmospheric pressure as the higher fixed point (100 °C). When a thermometer is calibrated, these two points are marked and then the scale is divided into 100 equal parts.

The **thermodynamic** temperature scale is independent of the physical properties of any particular substance.

The fixed points on the thermodynamic scale are:

- **absolute zero** — this is the temperature at which no more energy can be removed from any body. All the energy that can be removed has been removed. (0 K = –273.15 °C).
- **triple point of pure water** — the unique temperature at which water exists in equilibrium as a vapour, a liquid and a solid. (273.16 K = 0.01 °C)

For convenience, the size of the unit in the thermodynamic scale was chosen to be the same size as the degree in the Celsius scale. You will see that the triple point is just above the melting point of water (0 °C).

Conversion between the Celsius and the Kelvin scales

Revised

$$T/\text{K} = T/°\text{C} + 273.15$$

In practice, we often simplify the conversion by using T K = T °C + 273.

Loading...

Worked example

Copy and complete the table, showing your working.

	Temperature/K	Temperature/°C
Boiling point of water		100
Boiling point of bromine	332.40	
Boiling point of helium	4.37	
Melting point of hydrogen		–258.98
Boiling point of nitrogen	77.50	

Answer

	Temperature/K	Temperature/°C
Boiling point of water	100 + 273 = 373	100
Boiling point of bromine	332.40	332.40 – 273.15 = +59.25
Boiling point of helium	4.37	4.37 – 273.15 = –268.78
Triple point of hydrogen	259.34 – 273.15 = 13.81	–259.34
Boiling point of nitrogen	77.50	77.50 – 273.15 = –195.65

Expert tip

The boiling point of water is given only to the nearest degree Celsius. Therefore, using 273 as the difference between Celsius and Kelvin is justified.

Now test yourself

1 A voltmeter connected to a thermocouple reads 0 V when both junctions are in ice at 0 °C, and 4.8 mV when one junction is in ice and one is in boiling water at 100 °C. What is the temperature when the reading on the voltmeter is 2.8 mV? Give your answer in degrees Celsius and in Kelvin. (You may assume that the thermo-e.m.f produced is directly proportional to the temperature difference between the junctions.)

Answer on p.216

Tested

18 Thermal properties of materials

Specific heat capacity and specific latent heat

Physics deals in models. The kinetic model of matter is a powerful model that can explain and predict macroscopic properties of materials. For example, the densities of solids are generally higher than the densities of liquids. This is because the particles in solids are closer together than the particles in liquids. The densities of gases are much lower than the densities of solids and liquids. This is because the particles in gases are much further apart than those in liquids or solids.

The kinetic model is based on the following ideas:

- Matter is made up of small particles (atoms, ions or molecules).
- The particles move around.
- There are forces between the particles.

Solids, liquids and gases

Revised

The three phases of matter can be distinguished at a macroscopic level and at a microscopic level. Table 18.1 shows the differences.

Table 18.1

Phase	Macroscopic properties	Microscopic properties
Solid	Definite volume, definite shape	Particles are in fixed positions about which they can vibrate; the interparticle forces are large
Liquid	Definite volume; takes the shape of the container	Particles are further apart than in a solid and are free to move around the body of the liquid; the interparticle forces, although much weaker than in a solid, are still significant
Gas	Neither definite volume nor shape; completely fills a container	Particles are much further apart and can move around freely; interparticle forces are negligible

Specific heat capacity

Revised

When a body is heated its temperature increases. The amount that it increases by (ΔT) depends on:

- the energy supplied (ΔE)
- mass of the body (m)
- the material the body is made from

$$\Delta T \propto \frac{\Delta E}{m}$$

which can be written:

$$\Delta E = mc\Delta T$$

where c is the constant of proportionality. Its value depends on the material being heated. It is known as the **specific heat capacity** of the material.

Rearranging the equation gives:

$$c = \frac{\Delta E}{m\Delta T}$$

The units of specific heat capacity are $J\,kg^{-1}\,K^{-1}$, although $J\,kg^{-1}\,°C^{-1}$ is often used. The units are numerically equal.

The **specific heat capacity** of a material is the energy required to raise the temperature of unit mass of the material by 1 K (or 1 °C).

Worked example

A block of aluminium has a mass of 0.50 kg. It is heated, using a 36 W heater, for 3 minutes and its temperature increases from 12 °C to 26 °C.

Calculate the specific heat capacity of aluminium.

Answer

$$c = \frac{\Delta E}{m\Delta T} = \frac{36 \times 3 \times 60}{0.50 \times 14} = 930\,J\,kg^{-1}\,°C^{-1}$$

This is slightly higher than the recognised figure. However, there is no attempt to allow for energy losses to the surroundings.

Specific heat capacity and the kinetic theory

In the earlier section on the kinetic theory, you met the idea that the temperature of a gas is a measure of the kinetic energy of its molecules. This theory can be extended to both liquids and solids — when the temperature of any body is increased the average kinetic energy of the particles in the body is increased.

Measurement of specific heat capacity

The principles of measuring the specific heat capacity of either a solid or liquid are simple:

- Measure the mass of material being heated.
- Measure the energy input.
- Measure the temperature change.

The apparatus required for a straightforward experiment is shown in Figure 18.1.

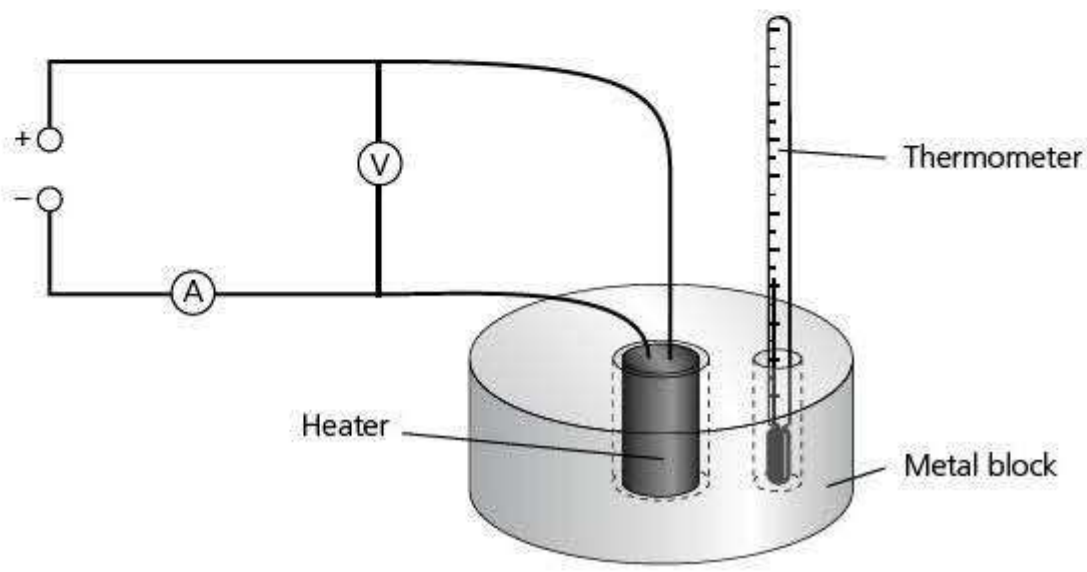

Figure 18.1

This is the sort of experiment that you may have met in earlier years of study. The mass and temperature change of the block are measured using a balance and thermometer. The energy input can be calculated from the power input (VI) multiplied by the time t for which the heater is switched on.

The major problem with this experiment is how to measure and/or reduce energy losses to the surroundings. Simple precautions can be taken:

- Insulate the block.
- Start the experiment with the block below room temperature and then turn the heater off when the block is at an equivalent temperature above room temperature. The block will gain energy from the surroundings when it is

below room temperature and lose an equal amount when it is above room temperature.

When similar experiments are carried out to find the specific heat capacity of liquids, it must be remembered that the container holding the liquid also requires energy to raise its temperature. Often, containers made from expanded polystyrene or similar insulating materials are used. These have two advantages:

- They provide the necessary insulation to reduce energy losses.
- They have a low **thermal capacity**.

thermal capacity, $C = mc$

where m = mass of the body and c = the specific heat capacity of the body.

The **thermal capacity** of a body is the energy required to raise the temperature of the complete body by 1°C.

Worked example

An electric shower is designed to work from a 230 V mains supply. It heats water as it passes through narrow tubes prior to the water passing through the shower head. Water enters the heater at 12°C and when the flow rate is $0.12\,kg\,s^{-1}$ it leaves at 28°C.

Calculate the current in the heater, assuming that energy losses are negligible.

(specific heat capacity of water = $4200\,J\,kg^{-1}\,°C^{-1}$)

Answer

power = $VI = mc\Delta T$

where m is the mass of water passing through the heater per second.

$230I = 0.12 \times 4200 \times (28 - 12)$

$I = 35\,A$

Expert tip

This is a fairly high current and electric showers tend to be on a separate circuit from other appliances. It is also worth recording that one way of adjusting the temperature of the shower is to alter the flow rate.

Latent heat

Revised

You will have observed that when ice melts (or water boils) the ice (or boiling water) remains at a constant temperature during the process of melting (or boiling), despite energy still being supplied. This energy does not change the temperature of the substance. Instead, it is doing work in changing the solid to liquid (or liquid to vapour). This energy is called the **latent heat of fusion** (or **latent heat of vaporisation**).

From the definitions:

$$L_f = \frac{\Delta E}{\Delta m}$$

where L_f is the specific latent heat of fusion, ΔE is the energy input, and Δm is the mass of solid converted to liquid.

$$L_v = \frac{\Delta E}{\Delta m}$$

where L_v is the specific latent heat of vaporisation, ΔE is the energy input, and Δm is the mass of liquid converted to vapour.

The units of both specific latent heat of fusion and of vaporisation are $J\,kg^{-1}$.

The **specific latent heat of fusion** is the energy required to change unit mass of solid to liquid without a change in temperature.

The **specific latent heat of vaporisation** is the energy required to change unit mass of liquid to vapour without a change in temperature.

Worked example

A 1.5 kW kettle contains 400 g of boiling water.
Calculate the mass of water remaining if it is left switched on for a further 5 minutes.
(specific latent heat of vaporisation of water = 2.26 MJ kg^{-1})

Answer

$$L_v = \frac{\Delta E}{\Delta m}$$

Therefore:

$$\Delta m = \frac{\Delta E}{L_v} = \frac{1.5 \times 10^3 \times 5 \times 60}{2.26 \times 10^6} = 0.199\,\text{kg} = 199\,\text{g}$$

mass remaining = 400 − 199 = 201 g

Latent heat and kinetic theory

You have seen how the average kinetic energy of the particles in a body increases as the temperature increases. When there is a change of state there is no change in the kinetic energy of the particles — this is why there is no change in the temperature. Instead, work is done to overcome the interparticle forces in separating the particles.

The average increase in the separation of particles when a solid turns to a liquid is small, although the interparticle forces are relatively large. The particles will now have more potential energy than in the solid state.

The specific latent heat of vaporisation of a substance is generally greater than the specific latent heat of fusion because, in melting, work is only done against two or three bonds, whereas in vaporisation work is done against up to a dozen bonds.

Measurement of the specific latent heat of fusion of ice

Figure 18.2 shows apparatus that could be used to measure the specific latent heat of fusion of ice.

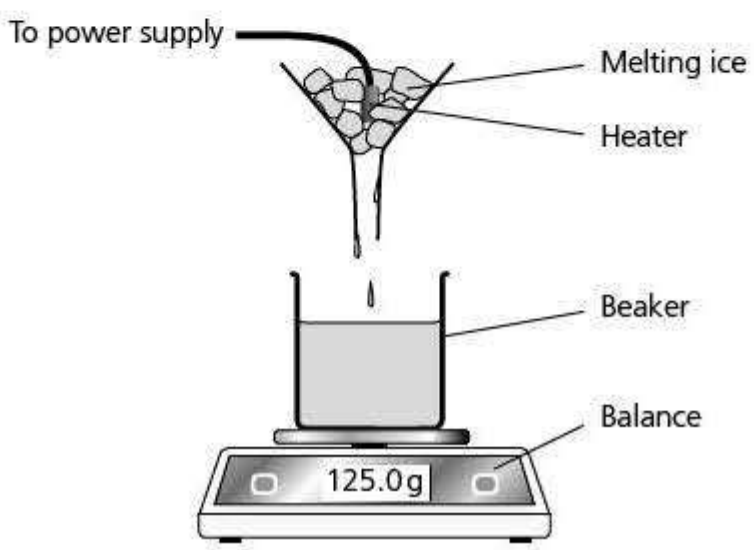

Figure 18.2 Determining the specific latent heat of fusion of ice

The method is straightforward. The heater melts the ice and the resulting water is collected in the beaker.

If the power of the heater is P, the mass of the beaker before the heater is switched on is m_1, the mass of the beaker plus water is m_2, and the heater is switched on for time t, then:

the latent heat of fusion of water, $L_f = \dfrac{P \times t}{m_2 - m_1}$

This, however, does not take into account energy exchanges with the surroundings. In this case, because the melting point of ice is lower than room temperature, it will be an energy gain, rather than a loss. One method to

allow for this is to measure the mass of the water collected for a given time before the heater is switched on. This gives the mass of water melted by the energy transferred from the surroundings. This can be subtracted from the mass collected when the heater is switched on. The following worked example demonstrates this.

Worked example

An experiment is carried out to measure the specific latent heat of fusion of water using the apparatus shown In Figure 18.2. The power of the heater is 48 W. The results obtained are shown in Table 18.2.

Table 18.2

	Initial reading on the balance/g	Final reading on the balance/g	Time/s
Heater off	116.2	124.4	480
Heater on	124.4	164.4	240

Calculate the specific latent heat of fusion of water.

Answer

ice melted due to energy gained from the surroundings = 124.4 − 116.2 = 8.2 g

ice melted due to this energy gained during the experiment = $\frac{8.2}{2}$ = 4.1 g

ice melted during the heating = 164.4 − 124.4 = 40.0 g

ice melted due to the heater = 40.0 − 4.1 = 35.9 g

$$L_f = \frac{P \times t}{m_2 - m_1} = \frac{48 \times 1240}{35.9} = 320\,\text{J g}^{-1}$$

Measurement of the specific latent heat of vaporisation of water

A similar method can be used to measure the specific latent heat of vaporisation of water (Figure 18.3).

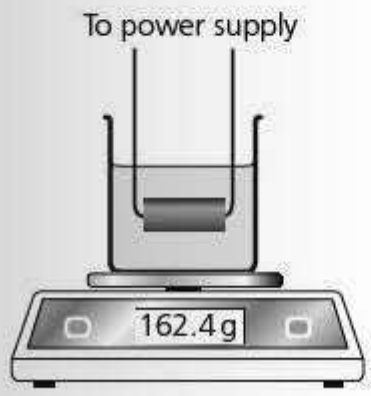

Figure 18.3 Determining the specific latent heat of vaporisation of water

The problem, in this case, is to allow for energy transferred to the surroundings. This can be done by repeating the experiment using a heater of different power for the same length of time as in the original experiment. The energy losses will be equal each time, so the differences between the two sets of results will cancel out the effect of heat losses. This is shown in the following worked example.

Worked example

An experiment is carried out to measure the specific latent heat of vaporisation of water using the apparatus shown in Figure 18.3. The results obtained are shown in Table 18.3.

Table 18.3

	Power of heater/W	Time/s	Mass of beaker and water at the beginning of the experiment/g	Mass of beaker and water at the end of the experiment/g
Experiment 1	36	600	177.8	168.4
Experiment 2	50	600	168.4	155.3

Calculate the specific latent heat of vaporisation of water.

Answer

Experiment 1:

input energy $- q = \Delta m L_v$

where q = energy transferred to the surroundings.

$36 \times 600 - q = (177.8 - 168.4)L_v$

$21\,600 - q = 9.4L_v$

Experiment 2:

input energy $- q = \Delta m L_v$

where q = energy transferred to the surroundings.

$50 \times 600 - q = (168.4 - 155.3)L_v$

$30\,000 - q = 13.1L_v$

Subtract the first equation from the second:

$30\,000 - 21\,600 = (13.1 - 9.4)L_v$

$8400 = 3.7L_v$

$L_v = 2.27 \times 10^3\,\mathrm{J\,g^{-1}}$

Revision activity

- Look up, on the internet, the energy arriving at the Earth from the Sun per day. How much ice could this energy melt? Most of this energy is re-radiated into space. If there were a 0.1% decrease in the amount of energy re-radiated away what extra mass of ice could be melted in a year?

Evaporation and boiling

Revised

You should be aware of the differences between evaporation and boiling (Table 18.4).

Table 18.4

Evaporation	Boiling
Molecules escape from the surface of the liquid	Bubbles of vapour form in the body of the liquid
Takes place over a wide range of temperatures	Takes place at a single temperature

Evaporation causes cooling. This can be understood if we consider kinetic theory. This is illustrated in Figure 18.4.

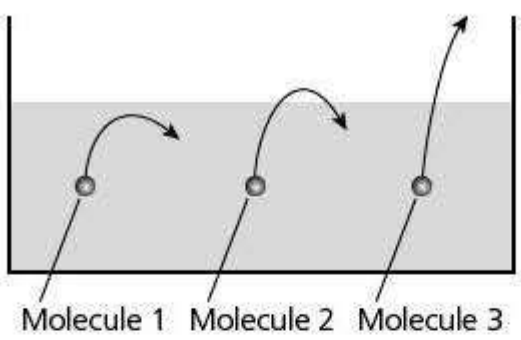

Figure 18.4

- Molecule 1 — a slow-moving molecule approaches the surface of a liquid but is pulled back into the body of the liquid.

Typical mistake

It is often incorrectly thought that evaporation does not require energy input. The confusion may arise because water evaporates at room temperature. However, you can see that the cooling that evaporation causes is likely to reduce the temperature of the water to below room temperature. Consequently there will be an energy transfer from the surroundings to the water (see page 111).

- Molecule 2 — a slightly faster-moving molecule approaches the surface of a liquid, just gets out of the surface, but there is still sufficient attraction to pull the molecule back into the liquid.
- Molecule 3 — a fast-moving molecule approaches the surface of a liquid. There is a tendency for it to be pulled back into the liquid, but it has sufficient energy to escape.

Molecules escape from the surface of the liquid. When a molecule is in the body of the liquid, the net force on it is zero because the pull from all the molecules around it cancel each other out. However, when a molecule approaches the surface of a liquid there is a resultant force towards the centre of the liquid because there are very few molecules above it. Consequently, only the fastest-moving molecules can escape from the surface. This means that the average speed of those left behind falls. Remember, the temperature is a measure of the average speed of the molecules in a body. When the average speed drops, the temperature drops.

Internal energy and the first law of thermodynamics

Internal energy

Revised

In the previous sections you have seen that the particles in a body have a mixture of kinetic energy and potential energy. Kinetic energy determines the temperature of the body and potential energy determines the state of the body. Not all particles have the same kinetic and potential energies — they are randomly distributed. The internal energy of a body is the sum of the kinetic energies and potential energies of all the particles in the body.

Internal energy is the sum of the random distribution of the kinetic and potential energies associated with the particles of a system.

The first law of thermodynamics

Revised

There are two ways of increasing the total internal energy of a body:

- heating the body
- doing work on the body

This leads to the first law of thermodynamics, which can be expressed by the equation:

increase in internal energy (ΔU) = the energy supplied to the system by heating (Q) + the work done on the system (W)

$$\Delta U = Q + W$$

(The 'energy supplied to the system by heating' is sometimes shortened to the 'heating of the system'.)

To demonstrate a use of the first law, consider an ideal gas contained in a cylinder by a frictionless piston. The initial volume of gas is V (Figure 18.5).

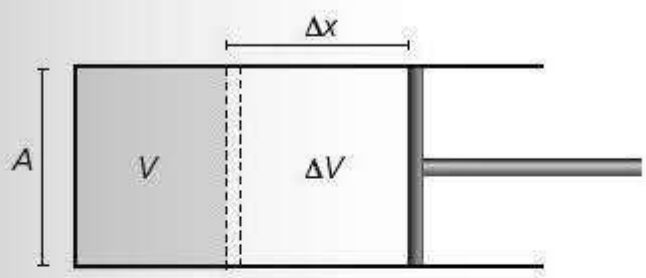

Figure 18.5

The gas is heated so that its volume increases by an amount ΔV against a constant atmospheric pressure. The gas expands, so work is done against atmospheric pressure:

$$W = F\Delta x$$

where F is the force on the piston.

force on the piston = pressure of the gas × area of cross-section of the piston = pA

So,

$$W = pA\Delta x = p\Delta V$$

Applying the first law of thermodynamics:

$$\Delta U = Q + W$$

$$\Delta U = Q - p\Delta V$$

The minus sign comes in because work is done by the gas on the atmosphere, rather than work being done on the gas. You will notice that the change in internal energy is less than the energy input ΔQ because some of the energy is used to do work in expanding the gas.

Table 18.5 explains when the quantities, ΔU, Q and W should be considered positive and negative.

Table 18.5

Quantity	Positive	Negative
ΔU	The internal energy increases	The internal energy decreases
Q	Energy is transferred *to* the system from the surroundings by heating	Energy is transferred *from* the system to the surroundings by heating
W	Work is done *on* the system	Work is done *by* the system

Adiabatic expansion and compression

Revised

This is an expansion or compression when no energy leaves or enters a gas. In this case $Q = 0$, so:

$$\Delta U = W$$

This means that when a gas expands and it does work on the atmosphere, W is negative. Therefore, ΔU is negative and the gas cools down. You may have observed that when carbon dioxide is released from a high-pressure cylinder, it cools so much that solid carbon dioxide (dry ice) is formed. If the gas is compressed, work is done on the gas and the gas is warmed. This is observed when pumping up a bicycle tyre — the barrel of the pump gets much hotter than it would from just doing work against friction.

Revision activity

- Must-learn equations:
  $\Delta E = mc\Delta T$
  $\Delta E = \Delta mL$
  $\Delta U = Q + W$

Now test yourself

Tested

1 500 g of copper rivets are placed in a polystyrene cup and are heated using a 40 W heater. The initial temperature of the rivets is 12°C. After heating for 5 minutes the temperature rises to 70°C. Calculate the specific heat capacity of copper.

2 A 1.25 kW kettle containing 0.75 kg of water at 20°C is switched on. Calculate the mass of water left in the kettle after 8 minutes. (specific heat capacity of water = 4200 J kg^{-1} K^{-1}, specific latent heat of vaporisation of water = 2 260 000 J kg^{-1})

3 150 J of energy is supplied to an ideal gas in a cylinder and the gas expands from 500 cm^3 to 750 cm^3 against atmospheric pressure. Calculate **(a)** the work done by the gas in expanding and **(b)** the internal energy gained by the gas. (atmospheric pressure = 1.0×10^5 Pa)

4 An isothermal change is one in which there is no change in temperature. Explain why there is a change in internal energy of a system in an isothermal change.

Answers on p.216

19 Oscillations

Simple harmonic oscillations

Terminology

Revised

Consider a ruler clamped to a bench, pulled downwards and released so that it vibrates (Figure 19.1a), a pendulum swinging backwards and forwards (Figure 19.1b) or a mass on the end of a spring bouncing up and down (Figure 19.1c). These are all examples of oscillating systems.

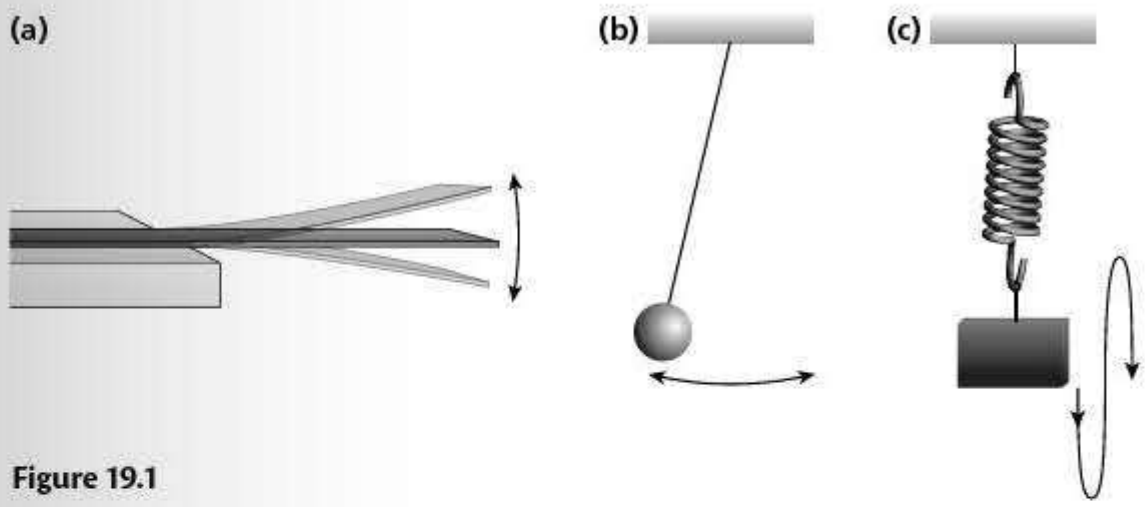

Figure 19.1

One complete oscillation is when a particle moves from its equilibrium position, to its maximum displacement in one direction, back through the equilibrium position, to the maximum displacement in the opposite direction, and back once more to the equilibrium position. This is shown in Figure 19.1(c).

The **period**, ***T***, is the time taken for one complete oscillation of a particle.

It is worth remembering the following relationships, which you may recognise from the work on circular motion in Topic 14:

$$F = \frac{1}{T}$$

$$\omega = 2\pi f$$

$$\omega = \frac{2\pi}{T}$$

In the examples above, the bodies vibrate in a particular way known as **simple harmonic motion (shm)**. There are many other types of oscillation. For instance, a conducting sphere will oscillate between two charged conducting plates — but this is not simple harmonic oscillation.

The conditions required for simple harmonic motion are:

- vibration of a particle about a fixed point
- the acceleration is always directed towards that fixed point
- the magnitude of the acceleration is proportional to the displacement from that fixed point

Simple harmonic motion can be investigated using a position sensor connected to a datalogger (Figure 19.2). The displacement against time graph can be deduced from the trace from the datalogger (Figure 19.3).

Expert tip

You have met many of the terms used in oscillations in your earlier work on waves and in circular motion. One term that you will not be familiar with is angular frequency. This is the equivalent of angular speed in circular motion. Like angular speed it is measured in rad s^{-1} and is equal to $2\omega f$.

Revision activity

- Look back at the work on waves on page 48 to revise the terms amplitude, period and frequency.
- Also look at the equations linking frequency, period and angular velocity in Topic 14 on circular motion, for the relationships between frequency and period and angular velocity and frequency.

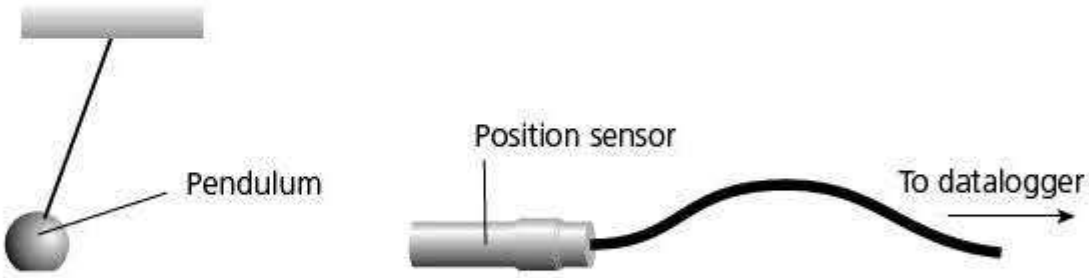

Figure 19.2

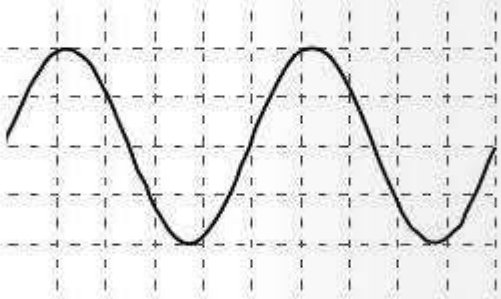

Figure 19.3

As with any displacement–time graph the velocity is equal to the gradient of the graph; the acceleration is equal to the gradient of the velocity–time graph (Figure 19.4).

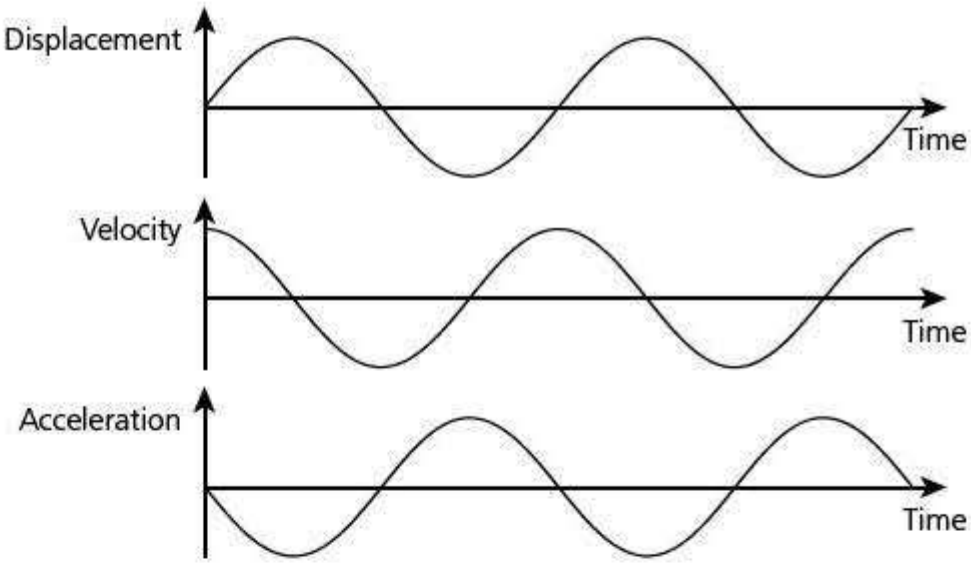

Figure 19.4

Table 19.1 describes the displacement, the velocity and the acceleration at different points during an oscillation, with reference to Figure 19.4.

Table 19.1

Point in cycle	Displacement	Velocity	Acceleration
$t = 0$	Zero	Maximum in one direction	Zero
¼ cycle on from $t = 0$	Maximum in one direction	Zero	Maximum in the opposite direction to the displacement
½ cycle on from $t = 0$	Zero	Maximum in the opposite direction to before	Zero
¾ cycle on from $t = 0$	Maximum in the opposite direction to before	Zero	Maximum in the opposite direction to the displacement
1 cycle on from $t = 0$	Zero	Maximum in the original direction	Zero

Revision activity

- Look back to the section on uniform electric fields in Topic 10 and give two reasons why a conducting ball bouncing between two vertical charged plates is not simple harmonic motion.

Equations for simple harmonic motion

Revised

The conditions for shm give the following proportionality:

$$a \propto -x$$

where a is the acceleration and x is the displacement. The minus sign comes in because the acceleration is in the opposite direction to the displacement.

This leads to the equation:

$$a = -\omega^2 x$$

where ω is the angular frequency.

This equation describes shm. The graphs in Figure 19.4 are 'solutions' to this equation. If you look at those graphs you will see that they have a sine (or cosine) shape. The precise equations that they represent are:

- displacement: $x = x_0 \sin \omega t$
- velocity: $v = x_0 \omega \cos \omega t$
- acceleration: $a = -x_0 \omega^2 \sin \omega t$

where x_0 is the amplitude of the oscillation.

If you look at the equations for displacement and acceleration you should be able to see that they fit in with the equation $a = -\omega^2 x$.

The velocity of the vibrating body at any point in the oscillation can be calculated using the formula:

$$v = \pm\ \omega\sqrt{x_0 - x^2}$$

It follows that when $x = 0$ (i.e. the displacement is zero) the velocity is a maximum and:

$$v = \pm \omega x_0$$

Worked example

A mass on the end of a spring oscillates with a period of 1.6 s and an amplitude of 2.4 cm.

Calculate:

(a) the angular frequency of the oscillation

(b) the maximum speed of the mass

(c) the maximum acceleration

(d) the speed of the particle when its displacement from the equilibrium position is 0.6 cm

Answer

(a) $f = \frac{1}{T} = \frac{1}{1.6}\,\text{Hz}$

$\omega = 2\pi f = 2\pi \times \left(\frac{1}{1.6}\right) = 3.9\,\text{rad s}^{-1}$

(b) $v_{max} = \omega x_0 = 3.9 \times 2.4 = 9.4\,\text{cm s}^{-1}$

(c) $a = -\omega^2 x$

Therefore, $a_{max} = \omega^2 x_0 = 3.9^2 \times 2.4 = 37\,\text{cm s}^{-2}$

(d) $v = \pm\ \omega\sqrt{x_0^2 - x^2} = 3.9 \times \sqrt{2.4^2 - 0.6^2} = 9.1\,\text{cm s}^{-1}$

Expert tip

A displacement–time graph can be started at any point on the cycle. Here the equilibrium position is chosen as the starting point. Other books might choose maximum displacement, in which case the displacement curve would be a cosine curve, the velocity curve would be a minus sine curve and the acceleration would be a minus cosine curve.

shm and circular motion

Revised

The introduction of ω should have reminded you of circular motion. The next experiment shows the relationship between circular motion and shm (Figure 19.5).

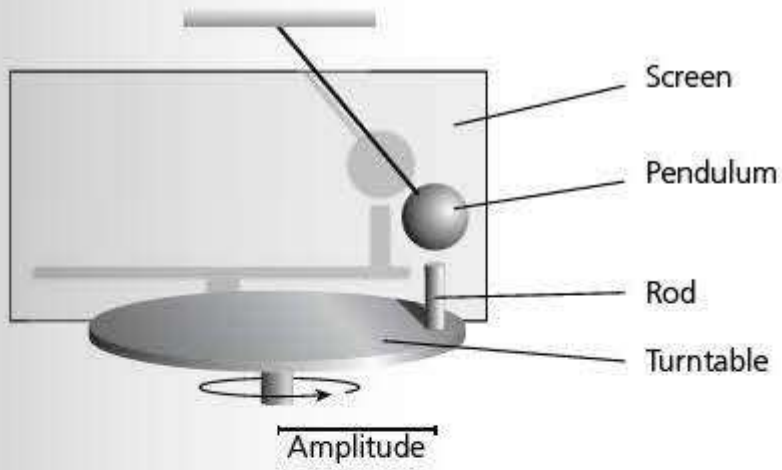

Figure 19.5

A rod is set up on a turntable, which rotates. A pendulum is set swinging with an amplitude equal to the radius of the rotation of the rod. The speed of rotation of the turntable is adjusted until the time for one revolution of the turntable is exactly equal to the period of the pendulum. The whole apparatus is illuminated from the front so that a shadow image is formed on a screen.

It is observed that the shadow of the pendulum bob moves exactly as the shadow of the rod. This shows that the swinging of the pendulum is the same as the projection of the rod on the diameter of the circle about which it rotates (Figure 19.6).

You should now understand the close mathematical relationship between circular motion and simple harmonic motion.

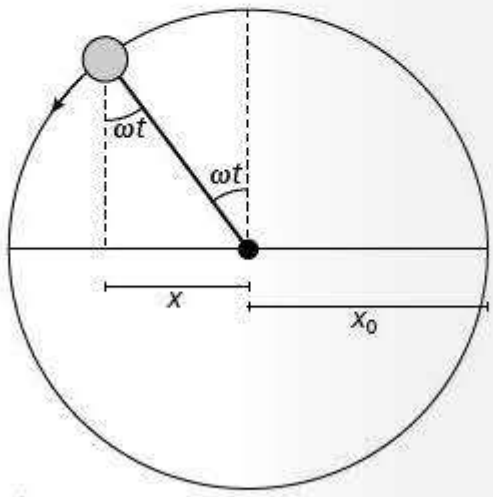

Figure 19.6

Energy in simple harmonic motion

Kinetic energy and potential energy

Revised

During simple harmonic motion, energy is transferred continuously between kinetic energy and potential energy.

- In the case of a pendulum, the transfer is between kinetic energy and gravitational potential energy.
- In the case of a mass tethered between two horizontal springs, the transfer is between kinetic energy and strain potential energy.

The important point is that in any perfect simple harmonic oscillator the total energy is constant. This means that the sum of the kinetic and potential energies remains constant throughout each oscillation.

The speed of the particle is at a maximum when the displacement is zero so that the kinetic energy is maximum at this point and the potential energy is zero. At maximum displacement the speed, and hence the kinetic energy, is zero and the potential energy is maximum (Figure 19.7).

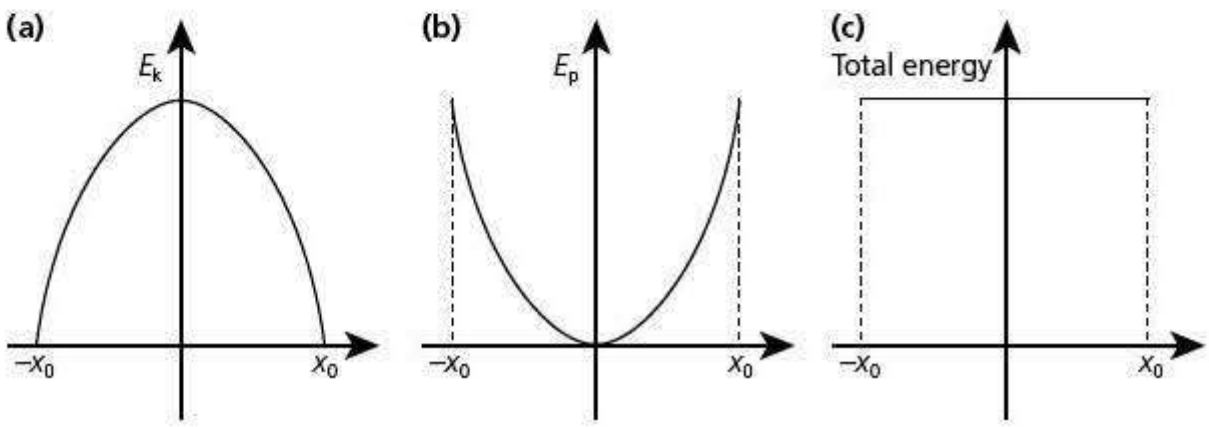

Figure 19.7 (a) The variation of kinetic energy with displacement, **(b)** the variation of potential energy with displacement, **(c)** the total energy with displacement

The equations that link the kinetic energy and the potential energy to the displacement are:

- kinetic energy: $E_k = \frac{1}{2}m\omega^2(x_0^2 - x^2)$
- potential energy: $E_p = \frac{1}{2}m\omega^2x^2$

Worked example

A clock pendulum has a period of 2.0 s and a mass of 600 g. The amplitude of the oscillation is 5.2 cm.

Calculate the maximum kinetic energy of the pendulum and, hence, its speed when it is travelling through the centre point.

Answer

$E_k = \frac{1}{2}m\omega^2(x_0^2 - x^2)$; for maximum speed the displacement = 0

$T = 2.0$, therefore $\omega = \frac{2\pi}{2} = \pi$

$E_k = \frac{1}{2}m\omega^2 x_0^2 = 0.5 \times 0.60 \times \pi^2 \times (5.2 \times 10^{-2})^2$

$E_k = 8.0 \times 10^{-3}$ J

$E_k = \frac{1}{2}mv^2$

$v = \sqrt{\frac{2E_k}{m}} = \sqrt{\frac{2 \times 8.0 \times 10^{-3}}{0.6}} = 0.16\,\text{m s}^{-1}$

Expert tip

If you use the formula $a = \omega^2 x_0$, you will find that the answer comes to $16\,\text{cm s}^{-1}$, which is in agreement with this value.

Damped and forced oscillations, resonance

Damping

Revised

Up to this point we have only looked at perfect simple harmonic motion, where the total energy is constant and no energy is lost to the surroundings. In this situation, where the only force acting on the oscillator is the restoring force, the system is said to be in **free oscillation**. In real systems, some energy is lost to the surroundings due to friction and/or air resistance. This always acts in the opposite direction to the restoring force. The result is that the amplitude of the oscillations gradually decreases. This is called **damping** (Figure 19.8).

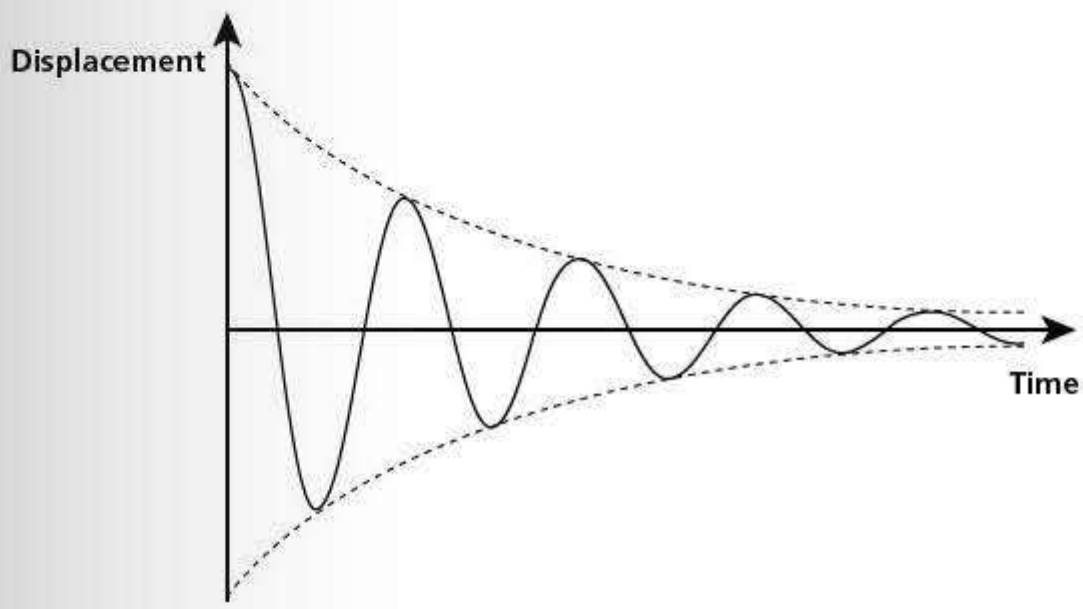

Figure 19.8

The decay of the oscillation follows an exponential decay (see page 197). The period, however, remains constant until the oscillation dies away completely. Figure 19.8 shows **light damping** — the oscillation gradually fades away. If the damping is increased we eventually reach a situation where no complete oscillations occur and the displacement falls to zero. When this occurs in the minimum time, the damping is said to be **critical**. More damping than this is described as **overdamping** and the displacement only slowly returns to zero.

Examples of damped oscillations

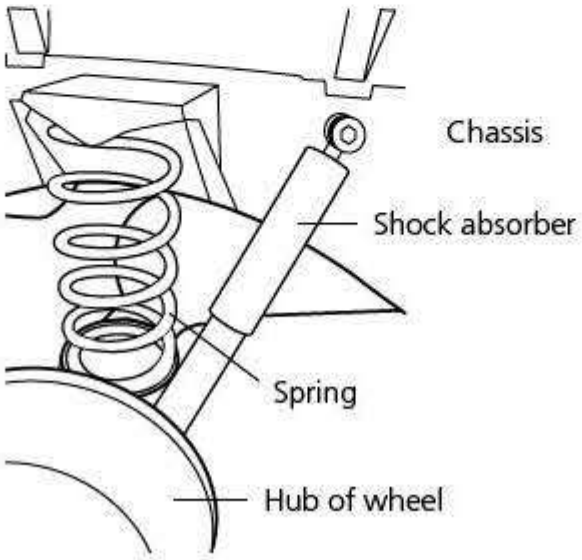

Figure 19.9 The suspension on a car relies on critically damped harmonic motion

A car suspension (Figure 19.9) operates in a critical damping mode in order to bring the displacement back to zero in the shortest possible time without oscillations. An overdamped suspension leads to a hard ride, with the energy given to the car by bumps not being absorbed as efficiently.

Forced oscillations

Revised

In Topic 9 you met the idea of stationary waves formed on a string. This is an example of a **forced oscillation**; an extra periodic force is applied to the system. This periodic force continuously feeds energy into the system to keep the vibration going.

You will have observed how the amplitude of the vibrations of the waves on a string changes as the frequency of the vibrator is increased — a small amplitude at very low frequencies gradually increasing to a maximum as the frequency is increased, then reducing again as the frequency is increased further (Figure 19.10).

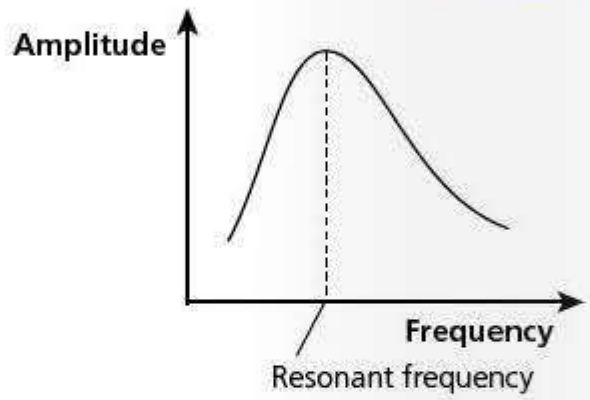

Figure 19.10 The amplitude of a forced oscillation at different frequencies

This is an example of **resonance**. If the driving frequency is the same as the natural frequency of oscillation of the string, then it gives the string a little kick at the right time in each cycle and the amplitude builds up.

Resonance can be demonstrated using Barton's pendulums (Figure 19.11).

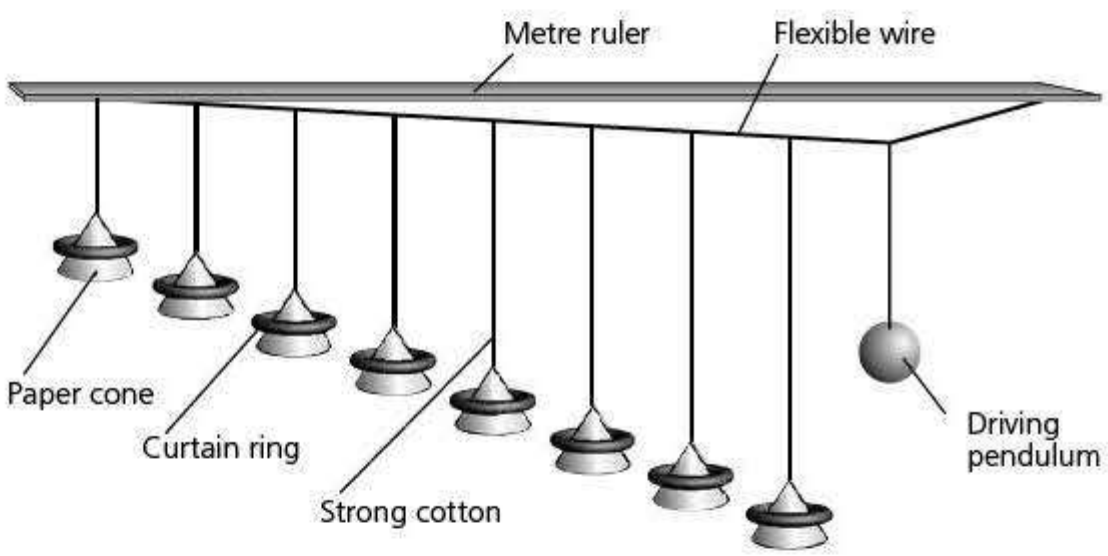

Figure 19.11

The driving pendulum causes the paper-cone pendulums to vibrate. Only the pendulums of a similar length to the driving pendulum show any significant oscillation. All the pendulums vibrate with the same frequency, which is the

frequency of the driving pendulum (not their own natural frequencies). This is a general rule for all forced oscillations.

Resonance and damping

Revised

Resonance can be useful. For instance, whenever a trombone or other wind instrument is played, stationary waves — which are an example of resonance — are set up. Whenever you listen to a radio you are relying on resonance because the tuning circuit in the radio will have the same natural frequency as the radio wave that transmits the signal.

However, resonance can be a problem in machinery, in bridge and building design, and in aircraft. Large oscillations of aircraft parts, for example, can cause 'metal fatigue', which leads to early failure of those parts.

In order to reduce resonance peaks, damping is introduced. This has the desired effect of reducing the amplitude of vibrations. However, it also tends to spread the range of frequencies at which large vibrations occur (Figure 19.12).

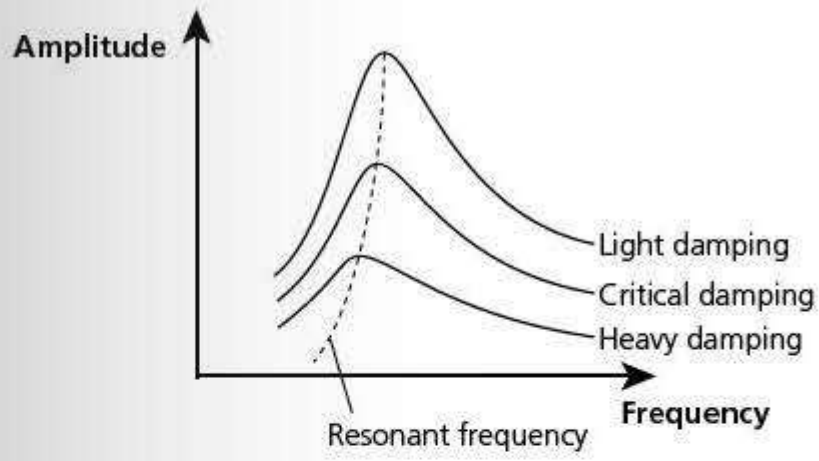

Figure 19.12 The effect of damping on the resonant frequency

This can be seen by removing the curtain rings from the paper cones in Barton's experiment. This reduces the mass of the pendulums, meaning that air resistance has a greater damping effect. It can be seen that there is a larger amplitude of vibration of those pendulums near but not at the resonant frequency.

There is a further effect as the damping of an oscillator is increased — the frequency at which the maximum amplitude occurs (the resonant frequency) falls slightly.

Revision activity

- Look for repetitive vibrating systems, for example a ball bouncing. Decide for yourself and justify whether or not the system vibrates with simple harmonic motion.

Now test yourself

Tested

1 The period of a simple pendulum is given by the formula: $T = 2\pi\sqrt{\frac{L}{g}}$. Calculate the period of a pendulum of length 25 cm.

2 The pendulum in question 1 has an amplitude of 4.0 cm. The bob has a mass 50 g. Calculate **(a)** the maximum speed of the pendulum bob, **(b)** the maximum kinetic energy of the bob and **(c)** the total energy of the system.

3 A particle vibrates with simple harmonic motion of amplitude 5.0 cm and frequency 0.75 Hz. Calculate the maximum speed of the particle and its speed when it is 2.5 cm from the central position.

4 Explain what is meant by the term *resonance*.

Answers on p.216

Production and use of ultrasound in diagnosis

Production of ultrasound

Revised

Ultrasound waves are sound waves that have frequencies above the threshold of human hearing, which is 20 kHz. To produce ultrasound, the **piezoelectric effect** is used.

Certain materials, for example quartz, generate an e.m.f. across their crystal faces when a tensile or compressive force is applied. Under compression, the e.m.f. is generated in one direction; when under tension the e.m.f. is in the opposite direction.

This property is used in the piezoelectric microphone. A sound wave, which is a pressure wave, can cause a piezoelectric crystal to compress and stretch in a pattern similar to that of the incoming wave. This produces a varying e.m.f. across the crystal, which can be amplified as necessary.

Applying stress produces a voltage, but the usefulness of the piezoelectric effect does not end here; the reverse is also true. If a potential difference is applied across such a crystal it either becomes compressed or expands depending on the direction of the e.m.f.

In ultrasound a single crystal uses the piezoelectric effect to produce and receive the ultrasound waves. A short pulse of high-frequency alternating voltage input causes the crystal to vibrate at the same frequency as the input voltage, producing an ultrasonic wave pulse. The ultrasonic wave pulse is reflected back from the material under investigation and is received by the same crystal. This causes it to vibrate and induce e.m.f.s that are sent to a computer. So the same crystal transducer is both the ultrasound generator and detector. This is illustrated in Figure 20.1.

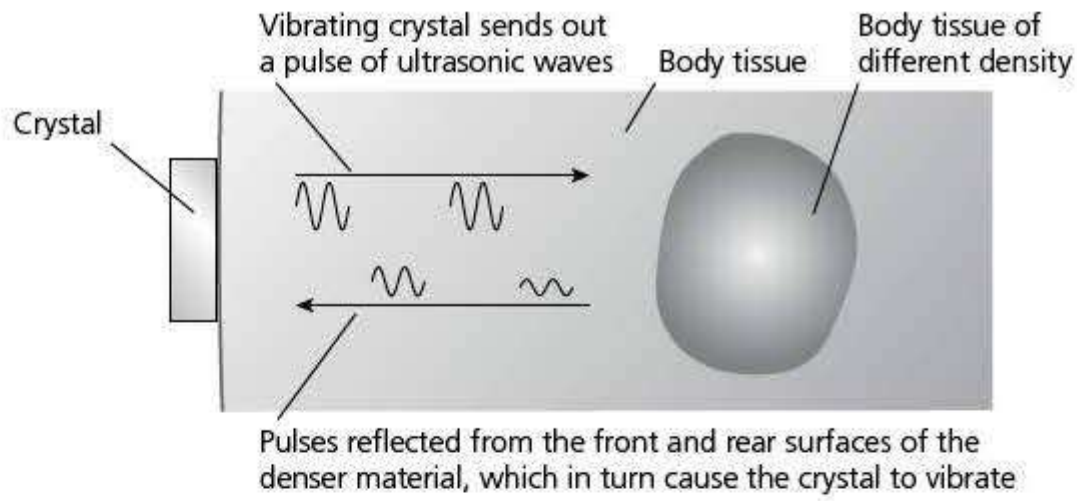

Figure 20.1 Reflection of ultrasound from tissues of different densities

Expert tip

As with many systems, resonance is required for maximum efficiency — the frequency of the ultrasound should be equal to the natural frequency of vibration of the crystal. For this to occur, the thickness of the crystal must be equal to one-half of the ultrasound wavelength.

Worked example

The speed of ultrasound in a piezoelectric crystal is $3600\,m\,s^{-1}$. Calculate the thickness of the crystal that would be used to generate waves of frequency 4.0 MHz.

Answer

$\lambda = \frac{c}{f} = \frac{3600}{4.0 \times 10^6} = 9.0 \times 10^{-4}\,m$

thickness of the crystal = $\frac{1}{2}\lambda = 4.5 \times 10^{-4}\,m = 0.45\,mm$

Medical use of ultrasound scanning

Revised

Pulses of ultrasound are directed to the organs under investigation. Different percentages of incident ultrasound reflect off the boundaries of different types of tissue, enabling a 'sound' picture to be built up.

As with any waves, the resolution that can be obtained is limited due to diffraction effects. Very-high-frequency (therefore short-wavelength) waves are used in medical ultrasound scanning in order to resolve fine details.

Worked example

The approximate speed of sound in human tissue is about $1500\,m\,s^{-1}$. Estimate the minimum-frequency ultrasound that would enable a doctor to resolve detail to the nearest 0.1 mm.

Answer

To resolve detail to the nearest 0.1 mm, the wavelength of the ultrasound must be of the order of 0.1 mm.

$f = \frac{c}{\lambda} = \frac{1500}{0.1 \times 10^{-3}} = 1.5 \times 10^7 = 15\,MHz$

Acoustic impedance

Revised

When ultrasound moves from a material of one density to another, some of the ultrasound is refracted and some is reflected. The fraction reflected depends on the **acoustic impedance**, ***Z*** of the two materials.

Specific **acoustic impedance** (Z) is defined from the equation: $Z = \rho c$, where ρ is the density of the material and c is the speed of the ultrasound in the material.

Worked example

The density of blood is $1060\,kg\,m^{-3}$ and the speed of ultrasound in it is $1570\,m\,s^{-1}$. Calculate the specific acoustic impedance of blood.

Answer

$Z = \rho c = 1060 \times 1570 = 1.66 \times 10^6\,kg\,m^{-2}\,s^{-1}$

The fraction of the intensity of the ultrasound reflected at the boundary of two materials is calculated using the formula:

$$\frac{I_r}{I_0} = \frac{(Z_1 - Z_2)^2}{(Z_1 + Z_2)^2}$$

where I_r is the intensity of the reflected beam, I_0 is the intensity of the incident beam and Z_1 and Z_2 are the acoustic impedances of the two materials.

Expert tip

This equation is only accurate for angles of incidence of 0° but it gives a good approximation for small angles.

The ratio:

$$\frac{I_r}{I_0}$$

indicates the fraction of the intensity of the incident beam reflected and is known as the **intensity reflection coefficient**.

Worked example

The density of bone is 1600 kg m^{-3} and the density of soft tissue is 1060 kg m^{-3}. The speed of sound in the two materials is 4000 m s^{-1} and 1540 m s^{-1} respectively. Calculate the intensity of the reflected beam compared with the incident beam.

Answer

$Z_{bone} = 1600 \times 4000 = 6.40 \times 10^6\ \text{kg m}^{-2}\text{s}^{-1}$

$Z_{soft\ tissue} = 1060 \times 1540 = 1.63 \times 10^6\ \text{kg m}^{-2}\text{s}^{-1}$

$$\frac{I_r}{I_0} = \frac{(Z_1 - Z_2)^2}{(Z_1 + Z_2)^2} = \frac{(6.40 - 1.63)^2}{(6.40 + 1.63)^2} = \frac{4.77^2}{8.03^2} = 0.35$$

Expert tip

The arithmetic is simplified by ignoring the factor 10^6. It is common to all terms in the equation and therefore cancels.

Coupling medium

The speed of sound in air is approximately 330 m s^{-1} and the density of air is about 1.2 kg m^{-3}. This gives an acoustic impedance of approximately 400 kg m^{-2} s^{-1}. Comparing this with skin, it means that 99.9% of the incident wave would be reflected at the air–skin boundary. To avoid this, a gel with a similar acoustic impedance to that of skin is smeared on the skin and the ultrasound generator/receiver is run across this. This gel is known as a **coupling agent** (Figure 20.2).

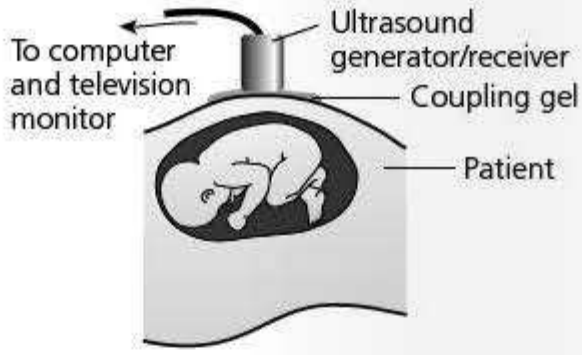

Figure 20.2 Ultrasound scanning of a pregnant woman, showing the coupling gel

A-scan

Revised

A pulse of ultrasound is passed into the body and the reflections from the different boundaries between different tissues are received back at the transducer. The signal is amplified and then displayed as a voltage–time graph on an oscilloscope screen (Figure 20.3).

Figure 20.3 might show the reflections from the front and back of a baby's skull. There are two reflections at each surface — one from the outer part of the skull bone and one from the inner part. Such a scan would give evidence of both the thickness and the diameter of the skull.

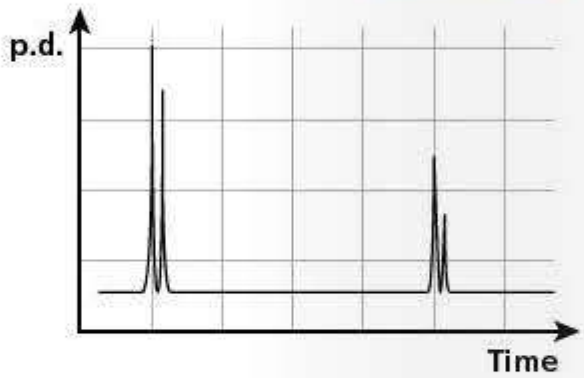

Figure 20.3 Oscilloscope display of ultrasound pulses

Worked example

Ultrasound travels at a speed of 1500 m s^{-1} through brain tissue. In Figure 20.3, the time base of the oscilloscope is set at 50 μs div^{-1}.

Calculate the diameter of the baby's skull.

Answer

separation of the two peaks = 4 divisions = 4 × 50 = 200 μs

distance the ultrasound pulse travels = vt = 1500 × 200 × 10^{-6} = 0.30 m

diameter of the baby's skull = ½ × 0.30 = 0.15 m

Expert tip

The signal has to travel across the gap between the two sides of the skull, is then reflected and travels back the same distance. Hence, the distance calculated from the graph is twice the diameter of the skull.

It is difficult to decide exactly where to take the readings from on each peak. In the example given, the readings are taken from the inner surface of the skull.

Problems include the following:

- The pulses received from reflections deeper in the body are weaker than those reflected from boundaries less deep in the body.
- The ultrasound waves are scattered and absorbed to some extent as they travel through the body.
- The reflected pulse is reflected again at the different boundaries as it travels back to the transducer.

In order to overcome these problems, the later pulses are amplified more than the earlier pulses.

B-scan

Revised

The B-scan uses a similar technique but the generator/receiver is moved around so that readings are taken from different angles. The position of the transducer is mapped in a similar way to a computer mouse recording its position on a mouse pad. This, and the information from all the different angles (both time lags and reflection intensities), are sent to a computer. Each pulse is then represented on the screen as a bright dot, which builds up a two-dimensional image. In practice, B-scan probes consist of an array of many transducers each of which is at a slightly different angle. This reduces the time it takes to build up an image and, therefore, reduces blurring.

The advantage of using ultrasound rather than X-rays is that the patient and staff do not receive potentially harmful, ionising radiation.

Attenuation of ultrasound

Revised

Ultrasound is absorbed as it passes through tissue. The amount of absorption depends on both the type of tissue and on the frequency of the wave. The attenuation is exponential and is given by the formula:

$$I = I_0 e^{-kx}$$

where I_0 is the initial intensity of the beam, I is the intensity of the beam after passing through a material of thickness x and k is the acoustic absorption coefficient.

Worked example

A pulse of ultrasound passes through 2.5 cm of muscle and is then reflected back through the muscle to the transducer. Calculate the fraction of the incident beam absorbed by the muscle. (acoustic absorption coefficient for muscle = $0.23\,\text{cm}^{-1}$)

Answer

total thickness of muscle penetrated by ultrasound = $2 \times 2.5 = 5.0\,\text{cm}$

$$\frac{I_r}{I_0} = e^{-kx} = e^{-0.23 \times 5.0} = e^{-1.15} = 0.32$$

fraction absorbed = $1.00 - 0.32 = 0.68$

Revision activities

- There are several new ideas in this section that may not be very familiar. List the key terms and their meanings, learn them thoroughly and then test yourself.
- Must-learn equations:

$$\frac{I_r}{I_0} = \frac{(Z_1 - Z_2)^2}{(Z_1 + Z_2)^2}$$

$$I = I_0 e^{-kx}$$

Now test yourself

Tested

1 a Calculate the minimum frequency of ultrasound needed to resolve detail of 0.5 mm in fatty tissue. (Speed of sound in fatty tissue = $1.5 \times 10^3\,\text{m s}^{-1}$.)

b The speed of sound in a piezoelectric crystal is $3.6 \times 10^3\,\text{m s}^{-1}$. Calculate the thickness of crystal required to produce ultrasound for use in part **a**.

2 a Calculate the specific acoustic impedance of fatty tissue of density $930\,\text{kg m}^{-3}$. (Speed of sound in fatty tissue = $1.5 \times 10^3\,\text{m s}^{-1}$.)

b Muscle has a specific acoustic impedance of $1.7 \times 10^6\,\text{kg m}^{-2}\,\text{s}^{-1}$. Calculate the intensity reflection coefficient for a muscle/soft tissue boundary. (Z for soft tissue = $1.6 \times 10^6\,\text{kg m}^{-2}\,\text{s}^{-1}$.)

3 Ultrasound passes through 3.0 cm of bone, of linear absorption coefficient $0.13\,\text{cm}^{-1}$. Calculate the percentage of the ultrasound absorbed in the bone.

Answers on p.216

21 Communication

Communication channels

Wire pairs

Revised

The first electrical method of transmission of information was the telegraph. It consisted of a transmitter connected by copper wires to a receiver in the form of a buzzer. Morse code signals were used to transmit the information. Some telephone systems still use copper wires but these have significant disadvantages and are being replaced gradually.

The disadvantages include:

- **cross-linking** — the signal intended for one subscriber is picked up by another, unintended, subscriber. It is caused by the transmitted signal on one circuit inducing a copy of the signal into an adjacent circuit.
- **poor security** — it is easy to tap into a telephone conversation.
- **high attenuation** — the electrical resistance of the wires means that the signal weakens relatively rapidly. The wires themselves act as aerials and the changing currents radiate electromagnetic waves, further weakening the signal. This means that the signals need to be amplified at regular intervals.
- **low bandwidth** — the rate of transmission of information is limited.
- **noise** — unwanted signals (interference) are easily picked up. When the signal is amplified the noise is also amplified.

Coaxial cables

Revised

These are a development of the wire-pair. A central wire, which acts as the transmitting wire, is sheathed by the outer conductor, which is earthed and acts as the signal return path. It reduces the amount of noise picked up and reduces cross-linking. Coaxial cables have a larger bandwidth than copper wires, increasing the rate of transmission of information. They do not radiate electromagnetic waves to the same degree, which reduces attenuation. Security is slightly higher because they are somewhat more difficult to tap into.

Optic fibres

Revised

Optic fibres are increasingly replacing copper wires in telecommunications systems. They carry the information in the visible or near infrared region of the spectrum, at frequencies in the region of 10^{14} Hz. In theory, at such frequencies, hundreds of thousands of messages could be transmitted at the same time. In practice the number is limited by the frequency with which the lasers that pulse the light can be switched on and off. Nevertheless, optic fibres can work in the gigahertz wave region.

Advantages of optic fibres over copper-based wires include:

- much larger bandwidth, so they can transmit information at a much faster rate

- less signal attenuation, so regeneration amplifying stations can be much further apart
- virtually impossible to tap, so much more secure
- negligible radiation of energy, so very little cross-linking
- much cheaper than their copper equivalent
- pick up much less noise, therefore there is a much clearer signal
- ideal for use with digital signals — the lasers producing the pulses can be switched on and off rapidly
- ideal for transcontinental communications — the cables are relatively cheap and of low weight so it is not over expensive to lay cables between and across continents; they can carry so many messages at the same time that only a few cables need to be laid across even busy routes

Radio waves and microwaves

Revised

Radio waves and microwaves are part of the electromagnetic spectrum, with frequencies ranging from about 30 kHz to 300 GHz. Although there is no fixed boundary between radio waves and microwaves, it is generally considered that microwaves have a frequency of 3 GHz or greater.

For convenience, radio waves are split into several further bands (Table 21.1).

Table 21.1

Band	Frequencies	Wavelengths (in a vacuum)	Use
Long wave	30 kHz to 300 kHz	1 km to 10 km	Radio broadcast
Medium wave	300 kHz to 3 MHz	100 m to 1 km	Radio broadcast
Short wave	3 MHz to 30 MHz	10 m to 100 m	Radio broadcast
Very high frequency (VHF)	30 MHz to 300 MHz	1 m to 10 m	FM radio broadcast/mobile phones
Ultra high frequency (UHF)	300 MHz to 3 GHz	10 cm to 1 m	Television broadcast/ mobile phones
Microwaves	3 GHz to 300 GHz	1 mm to 10 cm	Satellite broadcasts

Long-wave and, to a lesser extent, medium-wave radio waves have the advantage that they can diffract sufficiently to keep close to the Earth's surface and can also diffract round objects so that there are no 'shadows' in which reception is poor. Such radio waves are sometimes called **surface waves**.

Short-wave radio waves do not diffract sufficiently for this type of transmission. However, they do reflect from the layer of charged particles in the Earth's atmosphere (the ionosphere). It was in this way that Marconi made the first transatlantic radio broadcast. These are known as **sky waves**.

Waves in the VHF, the UHF and the microwave regions are of even shorter wavelength than short-wave radio waves and hence diffract even less. VHF and UHF waves penetrate the ionosphere and when used in communications are transmitted to satellites, which regenerate them and transmit them back to Earth. This type of wave is known as a **space wave** (Table 21.2).

Table 21.2

Type of wave	Frequency/MHz	Wavelength (in a vacuum)/m	Range/km
Surface wave	<3	>100	1000
Sky wave	3 to 30	10 to 100	100*
Space wave	>30	<10	Line of sight*
*Both of these can be transmitted by reflection from the ionosphere or from regenerated waves from communications satellites, as appropriate. In practice, the use of the ionosphere as a reflecting layer is not made today because its lack of stability leads to inconsistent reception.			

Bandwidth increases with increasing frequency, so microwaves have a much larger bandwidth than even VHF and UHF radio waves. This means that information can be transmitted at a much faster rate using microwaves.

Modulation

Electromagnetic radiation, mostly in the radio wave and microwave regions of the spectrum, is used to transmit information across long distances. The information is transmitted by a wave of specific frequency to which a receiver is tuned. This wave is known as the **carrier wave**. When you change stations on a radio receiver you are tuning into a different carrier frequency. The information is carried by modulating the carrier wave. There are two forms of **modulation**: amplitude modulation and frequency modulation.

Modulation is the variation in either the amplitude or frequency of the carrier wave.

Amplitude modulation

Revised

The carrier wave has a constant frequency; the amplitude varies in synchrony with the displacement of the information signal.

The variation of amplitude is detected by the receiver and converted back into a sound wave (Figure 21.1).

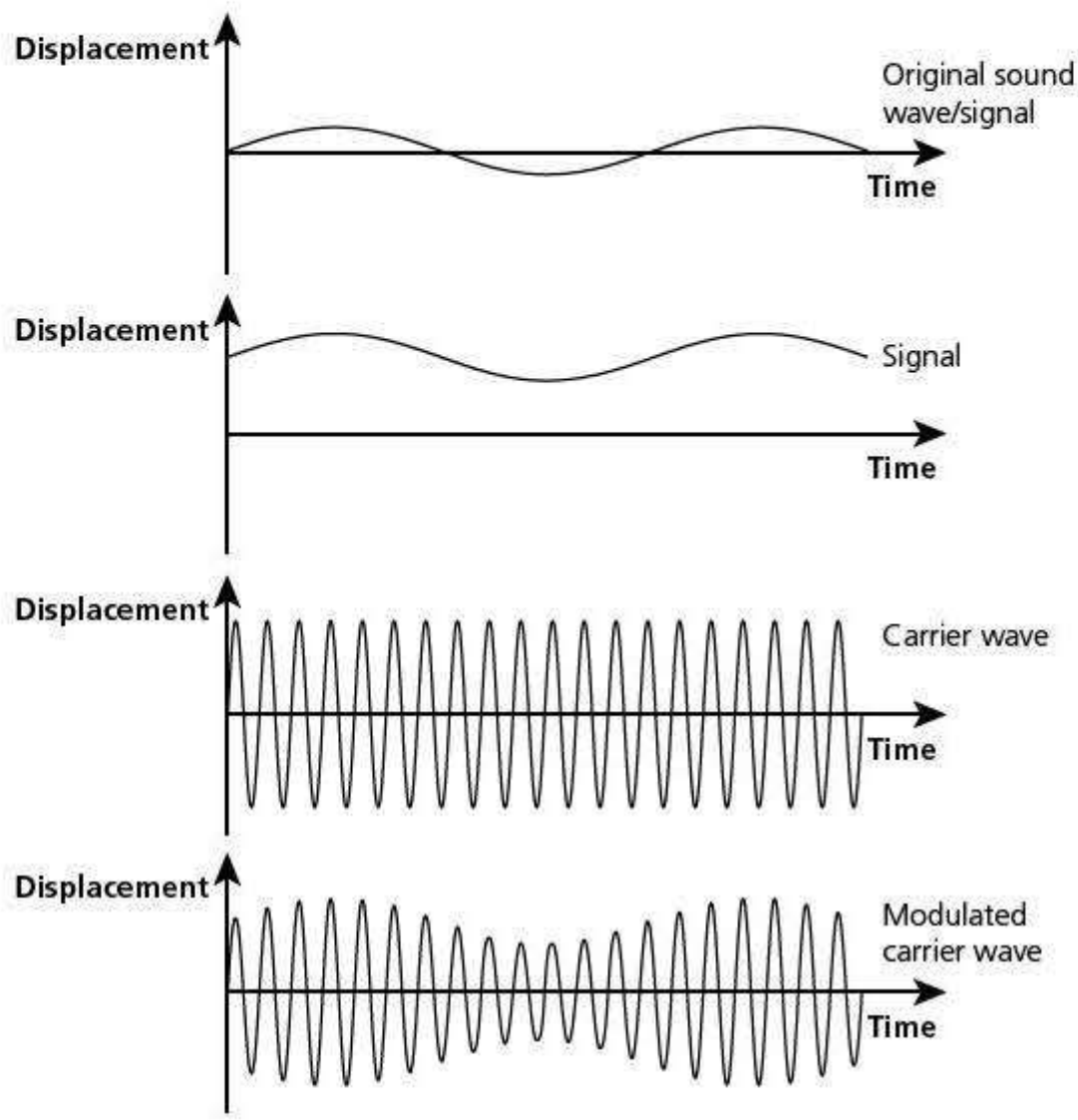

Figure 21.1 Amplitude modulation

Side bands and bandwidth

A carrier wave that is amplitude modulated by a signal of a single frequency consists of the carrier wave and two **sideband** frequencies (Figure 21.2).

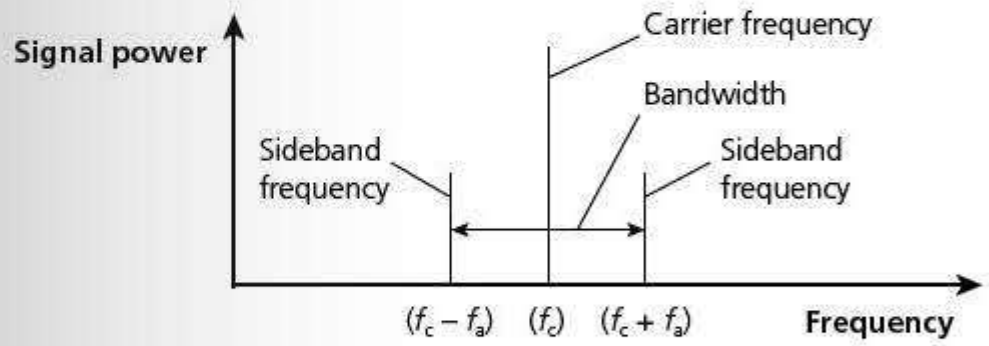

Figure 21.2 Sidebands and a wave modulated with a single frequency signal

If the frequency of the carrier wave is f_c and the frequency of the signal is f_s, then the frequencies of the two side bands are $f_c - f_s$ and $f_c + f_s$. In practice, when listening to a radio, there is a range of sound frequencies and, therefore, signals. The bandwidth is the range of these frequencies (Figure 21.3).

bandwidth = $2f_s$

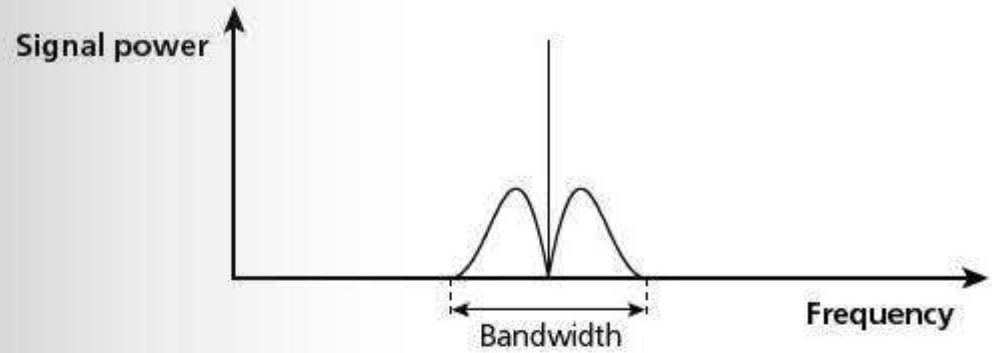

Figure 21.3 Sidebands and a wave modulated by a signal with a range of frequencies

Bandwidth is the range of frequencies that a signal occupies.

Worked example

A radio station transmits at a frequency of 200 kHz. The maximum bandwidth is 9 kHz.

Calculate the lowest and highest frequencies that are transmitted. Comment on the effect on the reproduction of sounds.

Answer

highest frequency = $f_c + f_s$ = 200 + (9/2) = 204.5 kHz

lowest frequency = $f_c - f_s$ = 200 − (9/2) = 195.5 kHz

The maximum frequencies that the human ear can detect are between 15 kHz and 20 kHz. With a bandwidth of only 9 kHz the highest notes are lost and the quality of sound reproduction is poor.

Frequency modulation

Revised

With frequency modulation, the amplitude remains constant but the frequency of the carrier wave is varied in synchrony with the information signal.

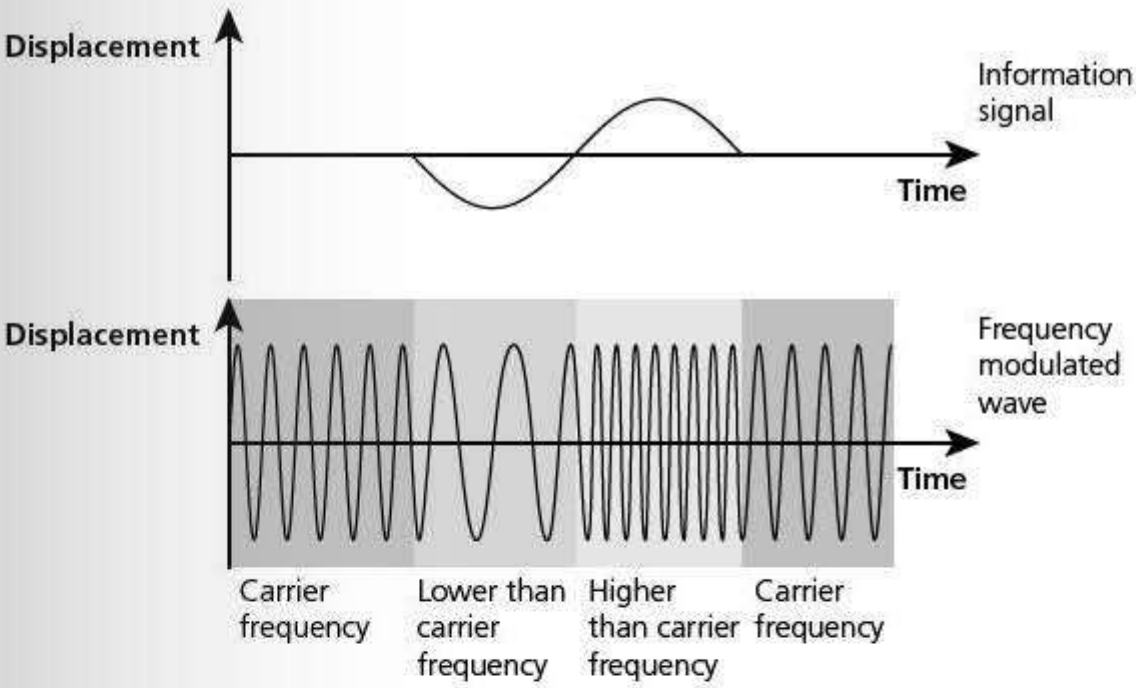

Figure 21.4 Frequency modulation

FM broadcasts have a larger bandwidth than AM waves — 15 kHz compared with 9 kHz. Although some humans can detect sounds of up to 20 kHz, these sounds tend to be very faint, so this bandwidth is capable of high-quality reproduction of music.

Advantages of AM and FM

Revised

AM and FM are compared in Table 21.3.

Table 21.3

Amplitude modulation	Frequency modulation
Narrower bandwidth; more stations available in any frequency range	Wider bandwidth means better reproduction of sound
Long wavelength means the waves can be diffracted round physical barriers; particularly significant in mountainous areas; fewer transmitters are required	FM cannot be diffracted round physical barriers; less prone to interference from other sources, e.g. lightning, unsuppressed internal combustion engines
Range of AM transmissions is much bigger than FM; hence this also means fewer transmitters are needed	Range of FM transmissions is much smaller than AM
Cheaper and less advanced technology required for transmission and receiving	More energy efficient; in AM waves one-third of the total power is carried by the sidebands
Can reflect off the ionosphere — enabled first transatlantic broadcast to be made — not so relevant today with communications satellites	Constant amplitude in FM means constant power, unlike AM

Digital communication

Analogue and digital signals

Revised

The signals described so far have been analogue signals. A precise electrical image of the original sound waves is formed. This is similar to the way that when a microphone is connected to a cathode-ray oscilloscope a graphical picture of the original sound wave is seen. An analogue quantity can have any value.

Digital quantities are quite different. They can only have a series of set values. A digital signal is a series of voltage pulses — on/off or high/low or 1/0.

An analogue signal is sampled at regular time intervals to build up a picture of the wave prior to converting it to a digital signal. This is shown in Figure 21.5

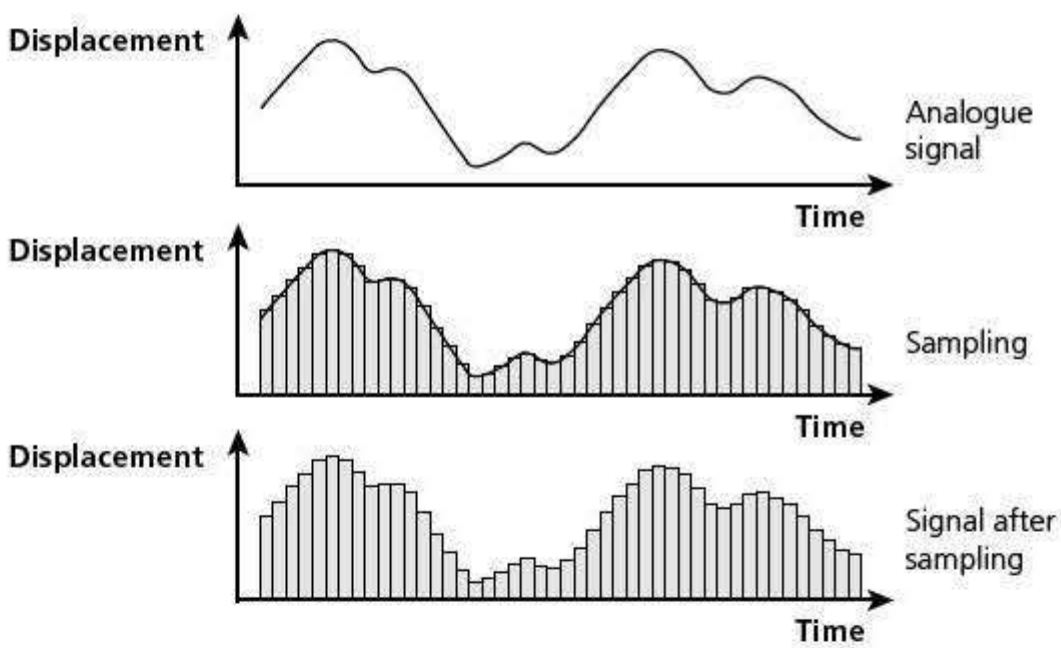

Figure 21.5

A digital system counts in **binary**. Binary has the advantage that there are only two digits, 1 and 0. The precision of the measurement of the strength of a signal depends on the number of **bits**. Table 21.4 shows binary counting in a four-bit system.

Binary is a system of counting in base 2, whereas we normally count in base 10.

A **bit** is a digit in the binary system.

Table 21.4

Decimal	Binary	Decimal	Binary	Decimal	Binary	Decimal	Binary
0	0000	4	0100	8	1000	12	1100
1	0001	5	0101	9	1001	13	1101
2	0010	6	0110	10	1010	14	1110
3	0011	7	0111	11	1011	15	1111

As can be seen, a four-bit system splits the signal into one of 16 levels.

The quality of reproduction of a signal depends on:

- the number of bits employed in the system — the more bits, the smaller the steps in the rebuilt wave
- the frequency of sampling — the higher the frequency, the more often the wave is sampled and the better the quality.

In Figure 21.5 you can see that, although the overall shape of the signal can be determined, much definition is lost. More frequent sampling would give a more faithful reproduction. In order to get a faithful reproduction of a signal, the frequency of sampling must be at least twice the maximum frequency of the signal.

The human ear can detect notes of frequencies up to about 15–20 kHz. If a piece of music is to be reproduced accurately the sampling rate must therefore be at least 40 kHz. This is expensive to do and requires sophisticated technology. Consequently, telephone systems use a much lower sampling rate (about 8 kHz) because frequencies of about 3.5 kHz only are required for voice recognition.

When information is transmitted, it is sent as a series of pulses. Each pulse contains the binary code for that piece of information. The device that converts the analogue signal into the binary (digital) number is called an **analogue-to-digital converter (ADC)**.

Worked example

A four-bit analogue-to-digital converter converts a signal into binary code. The ADC works at a maximum potential difference of 7.50 V.

(a) Calculate the size of each 'step' in the output signal. Assume that there is no amplification or attenuation.

(b) Deduce the binary code packets that would correspond to the following series of sampling voltages: 0.2 V, 1.5 V, 4.5 V, 7.2 V

Answer

(a) voltage steps $= \frac{7.5}{15} = 0.5\,\text{V}$

(b) 0.2 V is below the first step, so is recorded as 0000

1.50 V is the third step $\left(\frac{1.50}{0.5} = 3\right)$ and is recorded as 0011

4.50 V is the ninth step $\left(\frac{4.50}{10.5} = 9\right)$ and is recorded as 1001

7.2 will read as 7.0 V, which is the fourteenth step and is recorded as 1110

At the receiver, the digital signal is converted back into an analogue signal. The device that does this is called a **digital-to-analogue converter (DAC)**.

Advantages of using digital signals

Revised

- Digital signals acquire much less noise than analogue signals through regeneration amplifiers.
- Noise, as well as the required signals, is amplified in analogue systems.
- Modern digital circuits are cheaper to manufacture than analogue systems.
- The bandwidth is smaller so more information can be transmitted per unit time.
- Extra information (extra bits of data) can be added to digital signals by the transmission system to check for any errors caused during transmission.
- They are easier to encrypt for secure transmission of data.

Look at the first two of these points. It is inevitable that signals, not only radio signals but signals sent along wires or fibre-optic cables, will pick up noise as they travel long distances. They will attenuate (get weaker). They will tend to smear out because the different frequencies in the signal travel at slightly different speeds along a cable or with slightly different paths.

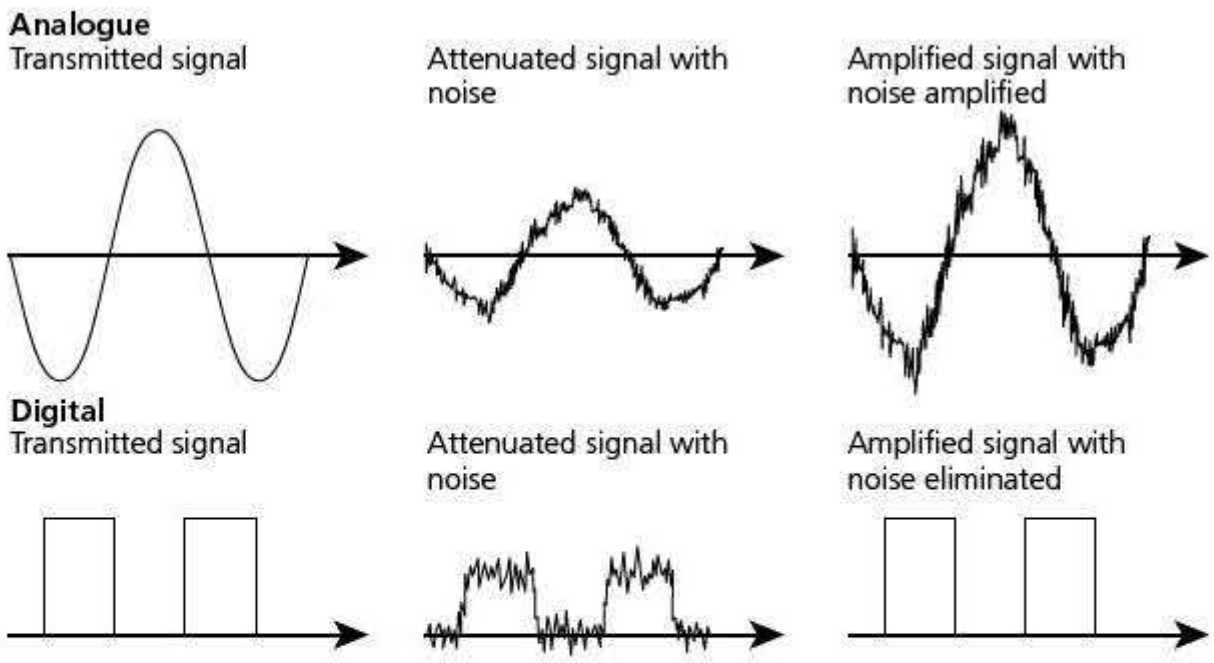

Figure 21.6 Comparison of amplification of analogue and digital signals

To counter the effects of attenuation, regeneration amplifiers amplify the signals at regular intervals. The noise on an analogue system is amplified along with the required signal. The noise with the digital amplification is eliminated because it is below the minimum step change that the amplifier recognises.

Relative merits of channels of communication

Communications satellites

Revised

Modern communications use satellites to relay messages (Figure 21.7). There are disadvantages. In particular, there is a delay between the sending of a signal and the recipient receiving the signal. In telephone conversations this leads to noticeable silences between replies. Nevertheless, they are invaluable for radio and television transmission, as well as long-distance telephone transmission where fibre-optic cables have not been laid.

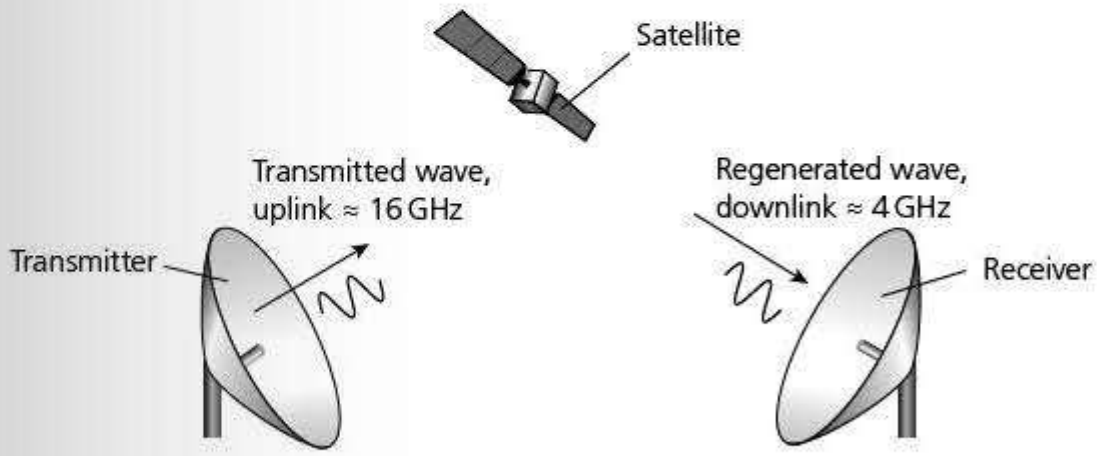

Figure 21.7 Transmission by satellite link

The signal reaching the satellite is only a tiny fraction of the transmitted signal. The satellite regenerates and amplifies the signal and retransmits it back to the Earth-based receivers at a different frequency. This change of frequency is required so that the powerful retransmitted signal does not swamp the much weaker signal from the Earth. The pathway from the Earth to the satellite is called the **uplink**; the path from the satellite to Earth is called the **downlink**.

Geostationary orbits

Revised

This is the type of orbit in which a satellite remains over the same point of the Earth.

Worked example

When in a geostationary orbit, a satellite is about 3.6×10^7 m above the Earth. Estimate the time lapse between a signal being sent to the satellite and the receiver receiving the signal.

Answer

minimum distance the signal must travel = $2 \times 3.6 \times 10^7$ m

$$\text{time} = \frac{\text{distance travelled}}{\text{speed}} = \frac{2 \times 3.6 \times 10^7}{3.0 \times 10^8} = 0.24\,\text{s}$$

The major advantage of using satellites in geostationary orbits is that they are always over the same spot on the Earth. Therefore they do not need to be tracked and are in communication with the transmitter (and receiver) at all times.

Revision activity

- Refer back to geostationary orbits on page 104.

Expert tip

This is the minimum delay. It is assumed that the path is straight up and down and that there is only one satellite link. Even in this case, it means that in a telephone conversation the gap between one person finishing a sentence and that person receiving a reply is nearly half a second (0.24 s to reach the second person plus 0.24 s for the reply). Consequently, where satellites are unable to do a job with a single link, optical fibres may be used in addition.

Polar orbits

Revised

When in a polar orbit a satellite passes over the two poles. In general, polar orbits are much lower than geostationary orbits. They are about 1000 km above the Earth's surface with an orbital period of about 90 minutes. Therefore they orbit the Earth about 16 times in a 24-hour period and cover every point on the Earth at some time each day.

Polar orbital satellites are used for long-distance communication and have the advantage of considerably shorter delay times. However, they have to be tracked and the communication pathways have to be swapped from one satellite to another as they go beyond the horizon and as the Earth rotates below them. The major uses of polar orbital satellites are for studying the Earth's surface (e.g. to monitor crop growth or the melting of polar ice), weather forecasting and spying.

Attenuation

You have already met the idea of attenuation (page 131). This section looks at it in more detail, including the numerical calculation of attenuation.

Attenuation is the gradual decrease in power of a signal as it travels through space or a medium.

Attenuation can be very large so when two powers are compared they are measured on a logarithmic, rather than a linear, scale. The unit used to compare two powers P_1 and P_2 is the **bel**, where the number of bels is related to the powers by the equation:

$$\text{number of bels} = \lg\left(\frac{P_1}{P_2}\right)$$

It is more common to use the decibel ($\frac{1}{10}$ of a bel). So:

$$\text{number of decibels} = 10\lg\left(\frac{P_1}{P_2}\right)$$

The symbol for the bel is B and hence for decibels is dB.

Typical mistake

The abbreviation lg stands for log to the base 10. Most calculators show this as log or $\log_{10}$. Care must be taken not to confuse this with log to the base e, which is usually written as ln or $\log_e$.

Worked example

The attenuation of a signal along a wire is 30 dB. The initial signal has a power of 50 mW. Calculate the power P_{out} of the signal after attenuation.

Answer

$$\text{number of decibels} = 10\lg\left(\frac{P_1}{P_2}\right)$$

$$-30 = 10\lg\left(\frac{P_{out}}{50}\right)$$

$$-3 = \lg\left(\frac{P_{out}}{50}\right)$$

$$10^{-3} = \frac{P_{out}}{50}$$

$$P_{out} = 50 \times 10^{-3} = 0.05\,\text{mW}$$

Expert tip

The power output is lower than the power input, so the number of decibels is written as a negative number. With an amplifier, the output is (usually) higher than the input so the number of decibels is positive.

It may be useful to know the attenuation of a cable. Manufacturers give a typical value of attenuation per unit length, measured in dB m^{-1}.

$$\textbf{attenuation per unit length} = \frac{\textbf{attenuation}}{\textbf{length of cable}}$$

Signal-to-noise ratio

Revised

As a signal travels along a cable the signal size decreases and the noise increases. It is unacceptable for the signal size to become so small that it is indistinguishable from the noise. The **minimum signal-to-noise ratio** gives a measure of the smallest signal amplitude that is acceptable.

Worked example

A cable has an attenuation of $4\,\text{dB km}^{-1}$. There is an input signal of power 0.75 W and the noise is 5×10^{-10} W. The minimum signal-to-noise ratio is 20 dB. Calculate the maximum length of cable that can be used to carry this signal.

Answer

$$\text{number of decibels} = 10\lg\left(\frac{P_s}{P_{noise}}\right)$$

$$20 = 10\lg\left(\frac{P_s}{5 \times 10^{-10}}\right)$$

$$2 = \lg\left(\frac{P_s}{5 \times 10^{-10}}\right)$$

$$10^2 = \frac{P_s}{5 \times 10^{-10}}$$

$$P_s = 10^2 \times 5.0 \times 10^{-10} = 5.0 \times 10^{-8}\,\text{W}$$

$$\text{maximum attenuation} = 10\lg\left(\frac{P_s}{P_{noise}}\right) = 10\lg\left(\frac{0.75}{5.0 \times 10^{-8}}\right) = 72$$

$$\text{maximum length of cable} = \frac{\text{attenuation}}{\text{attenuation per unit length}} = \frac{72}{4} = 18\,\text{km}$$

This example illustrates one advantage of digital signals compared with analogue signals. When amplified, the noise in an analogue signal is amplified as well as the signal, hence the signal-to-noise ratio is unaltered, so this is the maximum distance that the analogue signal could travel. With a digital signal, the noise is not amplified, so the signal is regenerated.

Revision activity

- There are several important concepts in this section, such as modulation, attenuation and bandwidth, which need to be understood. Identify and list these concepts and their meanings, and then make sure you are thoroughly familiar with these terms.

Now test yourself

Tested

1 a For good quality reproduction of music a minimum bandwidth of 15 kHz is needed. Calculate the bandwidth as a percentage of the carrier wave for **i** a medium wave signal of 300 kHz and **ii** a microwave signal of wavelength 10 cm.

b Explain why many fewer radio stations are available in the microwave part of the spectrum, compared with the medium wave.

2 a Convert 33 to binary using a 6-bit system.

b Convert 10101 from binary to base 10.

3 a Calculate the number of steps in 6-bit binary.

b Calculate the size of each step in a 6-bit system if the maximum voltage is 6.0 V.

4 An amplifier is advertised as increasing a 20 mW input by 42 dB. Calculate the output power of the amplifier.

Answers on p.216

22 Electric fields

Electric forces between point charges

You have already looked at uniform electric fields in Topic 10. It would be a good idea to revise those ideas before continuing with this section. The ideas introduced earlier are developed and non-uniform fields are introduced.

Coulomb's law

Revised

You have already met the idea that unlike charges attract and like charges repel. You may have deduced that the sizes of the forces between two charges depend on:

- the magnitude of the charges on the two bodies; $F \propto Q_1Q_2$, where Q_1 and Q_2 are the charges on the two bodies
- the distance between the two bodies; $F \propto 1/r^2$, where r is the distance between the two charged bodies

This leads to:

$$F \propto \frac{Q_1Q_2}{r^2}$$

The constant of proportionality is $1/4\pi\varepsilon_0$, where ε_0 is known as the permittivity of free space and has a value $8.85 \times 10^{-12}\,C^2\,N^{-1}\,m^{-2}$. This unit is often shortened to farads per metre ($F\,m^{-1}$). You will meet the farad in Topic 23 on capacitors:

$$F \propto \frac{Q_1Q_2}{4\pi\varepsilon_0 r^2}$$

Expert tip

This relationship only really applies when point charges are considered. However, the charge on a spherical body can be considered to act at the centre of the body, provided that the distance between the two bodies is considerably greater than their diameters.

Worked example

Figure 22.1 shows how the forces on two charged bodies can be investigated. The two conducting spheres are identical, each having a diameter of 1.2 cm. They are charged by connecting them to the same very high voltage supply.

Use the data in Figure 22.1 to find the magnitude of the charges on the two spheres.

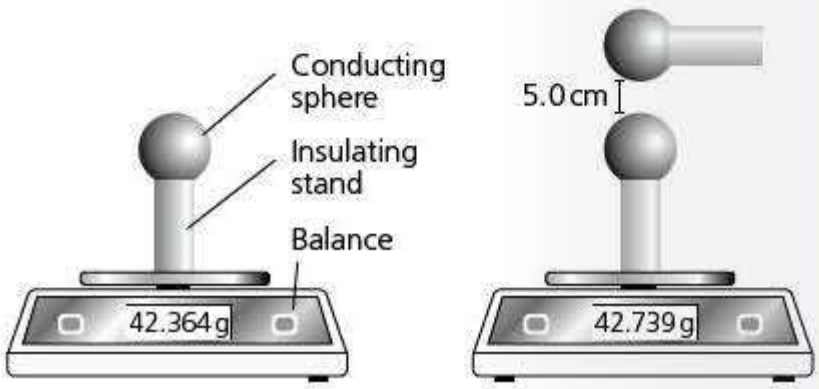

$\varepsilon_0 = 8.85 \times 10^{-12}\,C^2\,N^{-1}\,m^{-2}$

Figure 22.1 Investigation of the forces between two charged conductors

Answer

distance between centres of the spheres = 5.0 + (½ × 2 × 1.2) cm = 6.2×10^{-2} m

difference in the readings on the balance = 42.739 − 42.364 = 0.375 g

force between the spheres = $0.375 \times 10^{-3} \times 9.8 = 3.68 \times 10^{-3}$ N

Using $F = \frac{Q_1Q_2}{4\pi\varepsilon_0 r^2}$:

$$3.68 \times 10^{-3} = \frac{Q^2}{4\pi \times 8.85 \times 10^{-12} \times (6.2 \times 10^{-2})^2}$$

$$Q^2 = 3.68 \times 10^{-3} \times 4\pi \times 8.85 \times 10^{-12} \times (6.2 \times 10^{-2})^2$$
$$= 1.57 \times 10^{-15}\,C^2$$

$$Q = 4.0 \times 10^{-8}\,C$$

Electric field of a point charge

Electric field strength

Revised

You will remember (from Topic 10) that electric field strength at a point is defined as the force per unit positive charge on a stationary point charge placed at that point. This means that the electric field strength around a point charge is given by the equation:

$$E = \frac{Q}{4\pi\varepsilon_0 r^2}$$

The equations for electric field strength and the force between two charged spheres should remind you of the equations for gravitational field and the gravitational force between two masses. There is one important difference. Look at the two equations:

$$E = \frac{Q}{4\pi\varepsilon_0 r^2} \text{ and } g = -\frac{GM}{r^2}$$

You will observe that there is no minus sign in the equation for electric field strength. A minus sign indicates that forces in the gravitational field are always attractive. In an electric field the forces may be either attractive or repulsive. For repulsion, the sign is positive. You have already seen that:

- like charges repel
- the products of two positives (positive times positive) and of two negatives (negative times negative) are both positive

For attraction to occur, the charges must have opposite signs (positive and negative) so the negative sign comes in automatically where it is required (Figure 22.2).

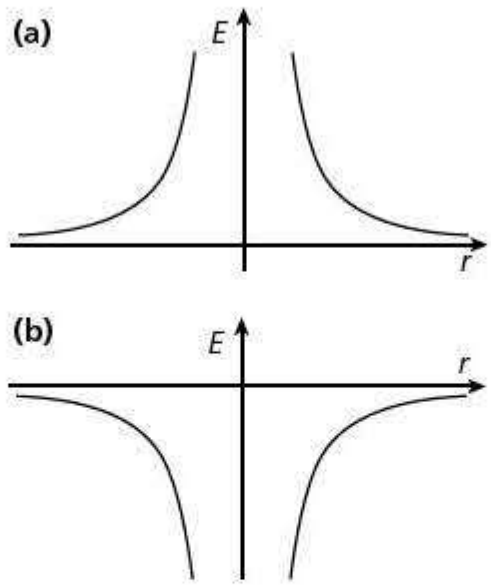

Figure 22.2 The electric field (a) near a positive point charge, (b) near a negative point charge

Worked example

Calculate the electric field strength at a distance of 10 nm from an electron.

Answer

$$E = \frac{Q}{4\pi\varepsilon_0 r^2} = -\frac{1.6 \times 10^{-19}}{4\pi \times 8.85 \times 10^{-12} \times (10 \times 10^{-9})^2} = 1.4 \times 10^7\,\text{N C}^{-1}$$

Electric potential

Electric potential at a point

Revised

You saw in the work on gravity (Topic 15) how gravitational potential at a point is defined as the work done in bringing unit mass from infinity to that point. When considering an electric field the rules are similar:

- Choose a point that is defined as the zero of electric potential — infinity.
- The electric potential at a point is then defined as the work done in bringing unit positive charge from infinity to that point.

The equation for the potential (V) near a point charge is:

$$V = \frac{Q}{4\pi\varepsilon_0 r}$$

Note the similarity with gravitational potential and, as with the electric field, there is no requirement for the minus sign. Although this equation refers to

a point charge, it is, as with the gravitational example, a good approximation provided that:

- the charge is considered to be at the centre of the charged object and the distance is measured from this point
- the point considered is at a distance greater than the radius of the charged body

It follows from this that the electric potential energy of a charge Q_2 in an electric field is given by the equation:

$$E_p = \frac{Q_1Q_2}{4\pi\varepsilon_0 r}$$

Consider the potential energy of a positive charge and a negative charge when they are brought up to a positively charged body. Both charges have zero potential energy at infinity. When the positive charge is brought up to the positively charged body, it gains potential energy and a 'potential hill' is formed (Figure 22.3a). When the negative charge moves towards the positively charged body, it loses energy as it approaches the body, so it has a negative amount of energy (Figure 22.3b).

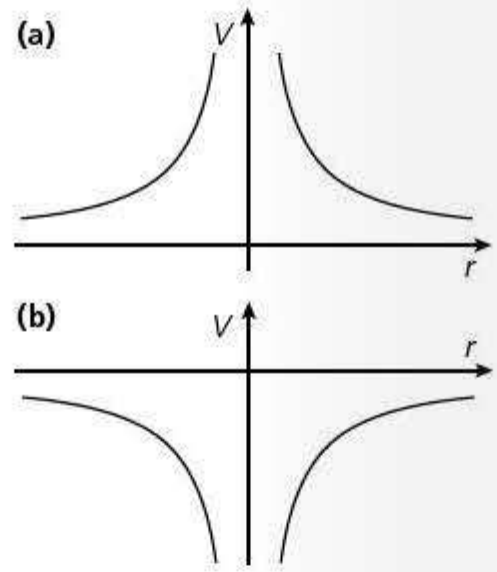

Figure 22.3

This should help you understand why infinity is a good choice of position as the zero of potential energy (Figure 22.4).

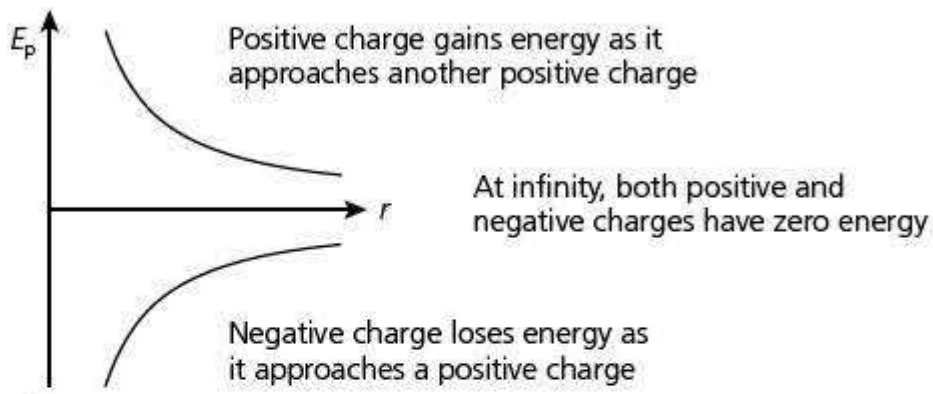

Figure 22.4

Worked example

A proton travels directly towards the nucleus of an atom of silver at a speed of $5.00 \times 10^6\,\text{m s}^{-1}$.

Calculate:

(a) the initial kinetic energy of the proton

(b) its closest approach to the silver nucleus

You may consider both the proton and the silver nucleus to be point charges.

(charge on the proton = $+e$; mass of a proton = 1.66×10^{-27} kg; charge on the silver nucleus = $+47e$, $e = 1.60 \times 10^{-19}$ C)

Answer

(a) $E_k = \frac{1}{2}mv^2 = 0.5 \times 1.66 \times 10^{-27} \times (5 \times 10^6)^2 = 2.08 \times 10^{-14}$ J

(b) Assume that all the potential energy of the proton is converted into electrical potential energy as it approaches the silver nucleus.

$$E_p = \frac{Q_1Q_2}{4\pi\varepsilon_0 r} = 2.08 \times 10^{-14} = \frac{47 \times 1.6 \times 10^{-19} \times 1.6 \times 10^{-19}}{4\pi \times 8.85 \times 10^{-12} \times r}$$

$$r = \frac{47 \times 1.6 \times 10^{-19} \times 1.6 \times 10^{-19}}{4\pi \times 8.85 \times 10^{-12} \times 2.08 \times 10^{-14}} = 5.20 \times 10^{-13}\,\text{m}$$

Relationship between electric field strength and potential

Revised

When studying the uniform field, you saw that the electric field strength between two plates can be calculated using either of the following two equations:

$$E = \frac{F}{Q} \text{ or } E = \frac{V}{d}$$

Figure 22.5 shows that in a uniform field the potential changes linearly with the distance d moved between the plates.

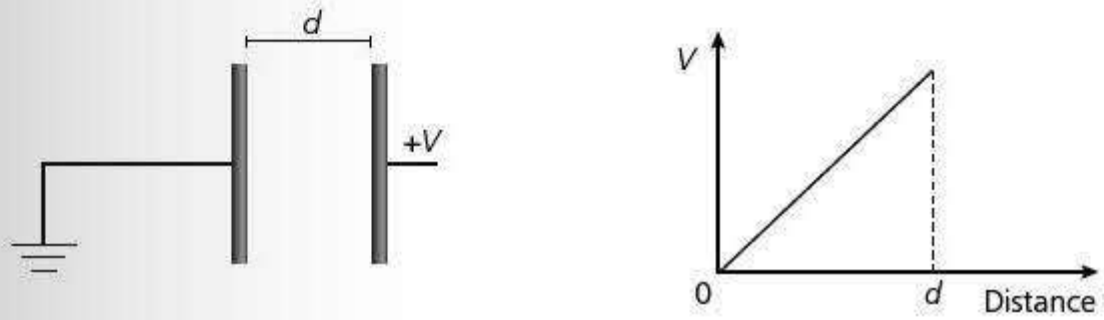

Figure 22.5 The potential changes linearly in a uniform field

The second equation is valid only because the field between the plates is uniform and, hence, there is a steady change in potential from the earthed plate to the positive plate.

The field of a point charge gets weaker moving away from the charge. Consequently, the change in potential is not uniform. Nevertheless, the change in potential with respect to distance is equal to the gradient of the graph (Figure 22.6):

***E* = –gradient of the *V*–*r* graph**

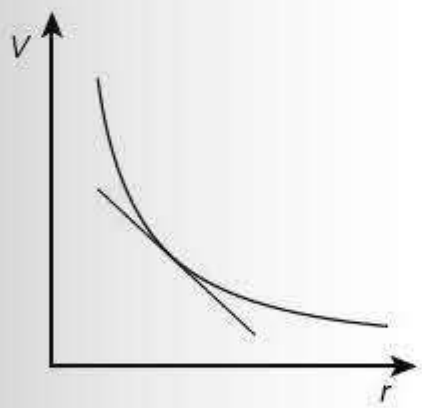

Figure 22.6 The electric field strength at any point is equal to minus the gradient at that point, which is equal to $-\frac{\Delta V}{\Delta r}$

The minus sign shows that the electric field (E) acts in the direction of decreasing potential. You can visualise this because when you bring a positive charge towards another positive charge you are going up a potential hill and the force is pushing you down the hill, in the opposite direction.

Revision activities

- The similarity of the mathematics between gravitational fields and electric fields has already been referred to. Go back through both types of field and note the similarities and differences to give you an in-depth understanding of the two situations. Take particular note of the differences in the mathematics of repulsion and attraction.
- Must-learn equation:

$$E = \frac{Q}{4\pi\varepsilon_0 r^2}$$

Now test yourself

Tested

1 Two electrons are separated by a distance of 2.0×10^{-8} m. Calculate the force between them. (charge on an electron $= 1.6 \times 10^{-19}$ C)

2 Calculate the electric field strength at the surface of the dome of a van de Graaff generator of radius 30 cm that carries a charge of 800 nC.

3 Calculate the potential at the surface of the dome in Question 2.

4 A hydrogen atom consists of a proton and an electron. The energy needed to totally remove the electron from the proton (i.e. ionise the atom) is 2.2×10^{-18} J. Calculate the initial distance between the electron and the proton.

Answers on p.216

23 Capacitance

Capacitors and capacitance

Capacitors are electronic devices that store charge. We can consider them to be made up of a pair of parallel conducting plates separated by an insulating material. When connected to a battery, charge flows onto one plate and an equal charge flows off the other plate (Figure 23.1).

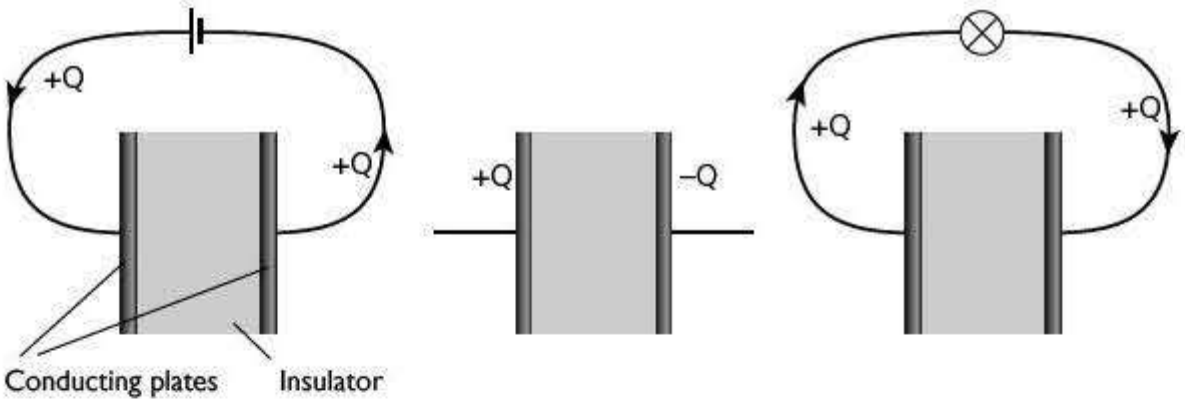

Figure 23.1 The flow of charge as a capacitor is charged and discharged

When the battery is removed, there is a net positive charge on one plate and a net negative charge on the other. When the capacitor is connected to a light bulb it will glow for a short time as the charge flows off the plates.

Capacitors have various uses in circuits. They are used in computers to run the computer for long enough to save data if there is a power cut. They are used to stop surges and to stop sparking when high voltages are switched. They can also be used as a time delay. For example, the timer on a burglar alarm system that allows the operator time to leave the premises before the alarm switches on contains capacitors.

How much charge does a capacitor store?

Revised

This depends on the particular capacitor and the potential difference across it. The charge stored is proportional to the potential difference across the capacitor.

$Q \propto V$ can be rewritten as $Q = CV$ where C is a constant called the **capacitance** of the capacitor.

$$C = \frac{Q}{V}$$

The unit of capacitance is the **farad (F)**.

A capacitance of 1 F is huge. In general, the capacitance of capacitors in electronic circuits is measured in microfarads (μF) or picofarads (pF):

$1\,\mu F = 10^{-6}\,F$

$1\,pF = 10^{-12}\,F$

Capacitance is the charge stored per unit potential difference across the capacitor.

1 **farad (F)** is the capacitance of a capacitor that has a potential difference of 1 volt across the plates when there is a charge of 1 coulomb on the plates.

Worked example

Calculate the charge stored when a 2200 μF capacitor is connected across a 9 V battery.

Answer

$Q = CV = 2200 \times 10^{-6} \times 9 = 0.020\,C$ (20 mC)

It is not only capacitors that have capacitance — any isolated body has capacitance. Consider a conducting sphere of radius r carrying charge Q.

The potential at the surface of the sphere, $V = Q/4\pi\varepsilon_0 r$

$$C = \frac{Q}{Q/4\pi\varepsilon_0 r}$$

Cancelling and rearranging gives:

$$C = 4\pi\varepsilon_0 r$$

Worked example

Estimate the capacitance of the Earth. (radius of the Earth = 6.4×10^6 m)

Answer

$C = 4\pi\varepsilon_0 r = 4 \times \pi \times 8.85 \times 10^{-12} \times 6.4 \times 10^6 = 7.1 \times 10^{-4}\,F \approx 700\,\mu F$

This is surprisingly small and it shows just how big the unit 1 farad is. Remember that this is the capacitance of an isolated body. Practical capacitors have their plates very close together to increase their capacitance.

Capacitors in parallel

Revised

Consider the three capacitors in Figure 23.2.

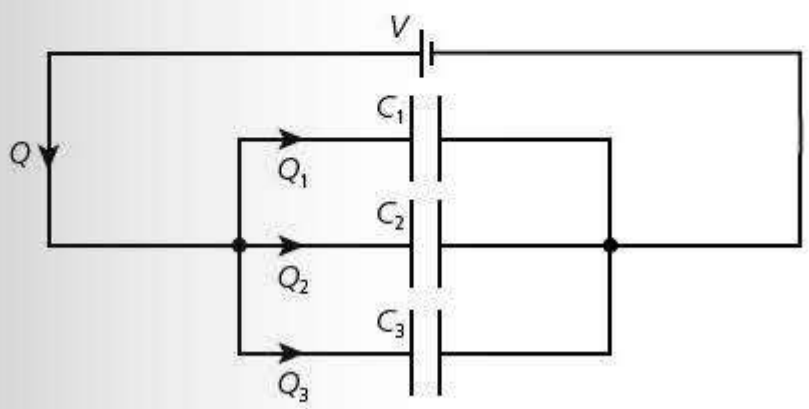

Figure 23.2 Capacitors in parallel

From Kirchhoff's second law, each capacitor has the same potential difference (V) across it.

From Kirchhoff's first law, the total charge flowing from the cell is the sum of the charges on each of the capacitors:

$$Q = Q_1 + Q_2 + Q_3$$

From $Q = CV$:

$$C_{total}V = C_1V + C_2V + C_3V$$

The Vs can be cancelled, giving:

$$\mathbf{C_{total} = C_1 + C_2 + C_3}$$

Typical mistake

Compare this with the equation $R_{total} = R_1 + R_2 + R_3$, which looks similar, but you must remember that whereas resistors in *series* add, capacitors in *parallel* add. Look at the capacitors in Figure 23.2. By adding a capacitor in parallel we are providing extra area for the charge to be stored on.

Capacitors in series

Revised

Consider three capacitors in series (Figure 23.3).

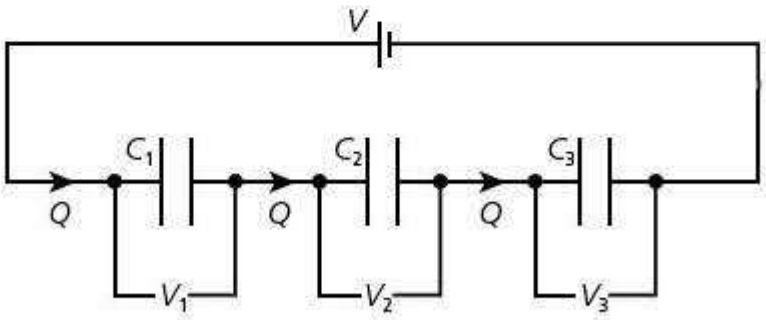

Figure 23.3 Capacitors in series

From Kirchhoff's second law, the potential difference across the cell will equal the sum of the potential differences across the capacitors:

$$V = V_1 + V_2 + V_3$$

From $Q = CV$:

$$V = \frac{Q}{C}$$

where C is the capacitance of the circuit, so:

$$\frac{Q}{C_{total}} = \frac{Q_1}{C_1} + \frac{Q_2}{C_2} + \frac{Q_3}{C_3}$$

The same charge Q flows on to each capacitor. Therefore the charges in the equation can be cancelled, so:

$$\frac{1}{C_{total}} = \frac{1}{C_1} + \frac{1}{C_2} + \frac{1}{C_3}$$

This equation has the same form as the formula for resistors in parallel. The combined resistance of several resistors in parallel is smaller than that of any of the individual resistors. Likewise, the combined capacitance of several capacitors in series is smaller than that of any of the individual capacitors.

Worked example

A student has three capacitors of values 47 μF, 100 μF and 220 μF.

(a) Calculate the total capacitance when:

(i) all three capacitors are connected in parallel

(ii) all three capacitors are connected in series

(b) How would the capacitors have to be connected to obtain a capacitance of 41 μF?

Answer

(a) (i) For capacitors in parallel:

$C_{total} = C_1 + C_2 + C_3 = 47 + 100 + 220 = 367\,\mu F$

(ii) For capacitors in series:

$$\frac{1}{C_{total}} = \frac{1}{C_1} + \frac{1}{C_2} + \frac{1}{C_3} = \frac{1}{47} + \frac{1}{100} + \frac{1}{220} = 0.036\,\mu F^{-1}$$

Therefore, $C = 28\,\mu F$

(b) The capacitance is less than 47 μF, the value of the smallest of the three capacitances. Therefore, it is likely that the arrangement has the form shown in Figure 23.4.

Checking:

capacitance of the two capacitors in parallel = 100 + 220 = 320 μF

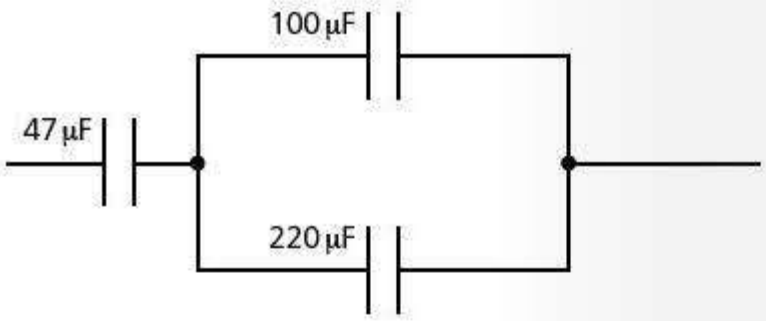

Figure 23.4

These are in series with the 47 μF capacitor so:

$$\frac{1}{C_{total}} = \frac{1}{C_1} + \frac{1}{C_2} + \frac{1}{C_3} = \frac{1}{47} + \frac{1}{320} = 1.244\,\mu F^{-1}$$

Therefore $C = 41\,\mu F$

Energy stored in a capacitor

Up to now we have described a capacitor as a charge store. It is more accurate to describe it as an energy store. The net charge on a capacitor is in fact zero: +Q on one plate, −Q on the other.

The energy stored in a capacitor is equal to the work done in charging the capacitor:

$$W = \tfrac{1}{2}QV$$

Using a potential–charge graph

Revised

Each strip in Figure 23.5 shows the work done on adding a small amount of charge to a capacitor. It can be seen that the total work done in charging the capacitor, and hence the energy it stores, is equal to the area under the graph.

It is sometimes useful to express the energy equation in terms of capacitance and potential difference. Substitute for Q using the basic capacitor equation, Q = CV:

$$W = \tfrac{1}{2}QV = \tfrac{1}{2}(CV)V$$

Therefore:

$$W = \tfrac{1}{2}CV^2$$

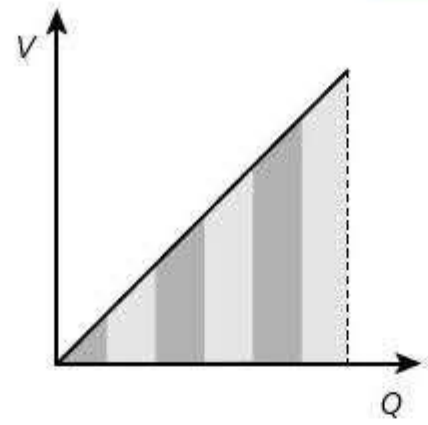

Figure 23.5 Energy stored in a capacitor is equal to the area under the V–Q graph

Worked examples

1 Calculate the energy stored in a 470 μF capacitor when it is charged with a 12 V battery.

2 A 50 μF capacitor is charged using a 12 V battery. It is then disconnected from the battery and connected across a second, uncharged, 50 μF capacitor. Calculate:

(a) the charge on the first capacitor before it is connected to the second capacitor

(b) the energy stored on the first capacitor

(c) the charge on each capacitor when they are connected together

(d) the potential difference across the capacitors

(e) the total energy stored when the two capacitors are connected together

Answers

1 $W = \tfrac{1}{2}CV^2 = 0.5 \times (470 \times 10^{-6}) \times 12^2 = 3.4 \times 10^{-2}$ J

2 (a) $Q = CV = 50 \times 12 = 600\ \mu C = 6.0 \times 10^{-4}$ C

(b) $W = \tfrac{1}{2}QV = 0.5 \times 6 \times 10^{-4} \times 12 = 3.6 \times 10^{-3}$ J = 3.6 mJ

(c) The charge will be shared equally between the two capacitors; therefore each capacitor has a charge of 3.0×10^{-4} C.

(d) The charge on each capacitor is half the original value, so the p.d. will be one-half of the original = 6.0 V.

(e) Energy on one of the capacitors = $\tfrac{1}{2}QV$
$= 0.5 \times 3.0 \times 10^{-4} \times 6 = 9.0 \times 10^{-4}$ J
Therefore the total energy = $2 \times 9.0 \times 10^{-4} = 1.8 \times 10^{-3}$ J

Now test yourself

Tested

1 A 1500 μF capacitor has a potential difference of 9.0 V across its plates. Calculate **a** the charge on the capacitor and **b** the energy stored by the capacitor.

2 Three capacitors have capacitance of 1500 μF, 2200 μF and 4700 μF. Calculate the total capacitance when they are connected **a** in series and **b** in parallel.

Answers on p.216

24 Current of electricity and D.C. circuits

Sensing devices and potential dividers

Light-dependent resistor (LDR)

Revised

The resistance of an LDR decreases with increasing light levels (Figure 24.1a). Typical values range from 100 Ω in bright sunlight to in excess of 1 MΩ in darkness.

Thermistor

Revised

Although there are different types of thermistor, you only need to know about **negative temperature coefficient** thermistors. The resistance of a negative temperature coefficient thermistor decreases with increasing temperature (Figure 24.1b).

A wide range of thermistors is available and an engineer will choose a suitable one for a particular job. However, typical resistance values might vary from 1 kΩ at room temperature, falling to around 10 Ω at 100°C.

Figure 24.2 shows typical temperature characteristics of three negative temperature coefficient thermistors.

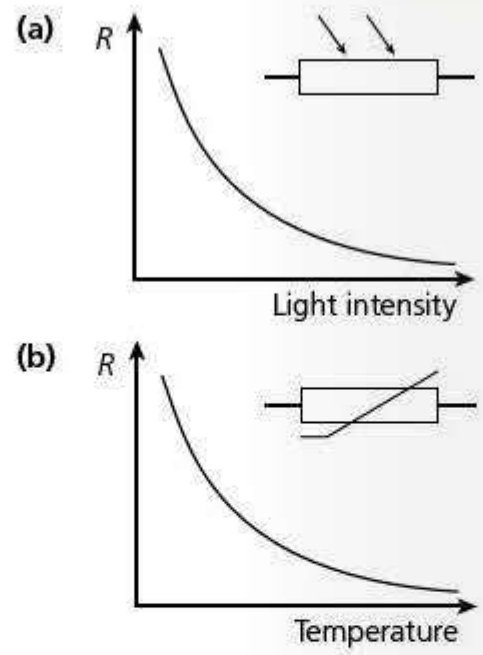

Figure 24.1 Circuit symbol and characteristic of (a) an LDR and (b) a thermistor

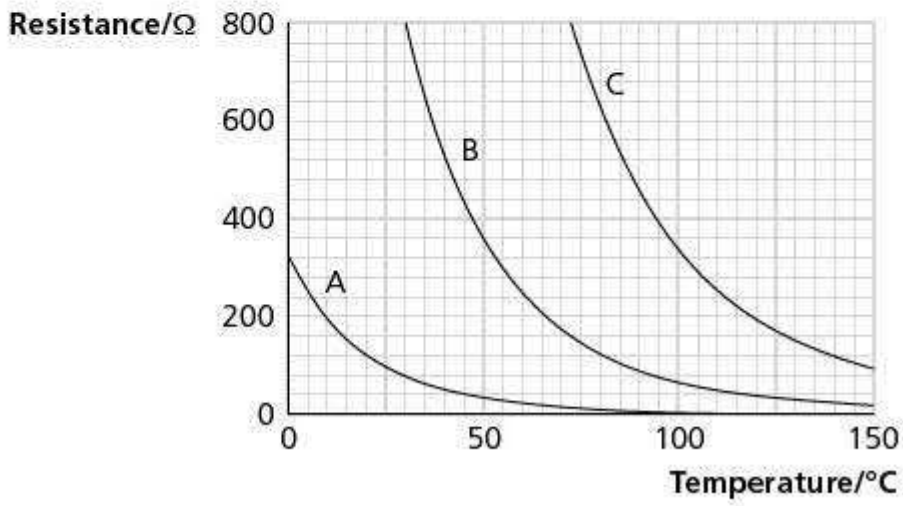

Figure 24.2 Thermistor characteristics

Strain gauge

Revised

Figure 24.3 shows the structure of a **strain gauge**. It consists of a length of wire embedded in and running up and down a plastic base. When the plastic bends, the wire stretches. This increases its length and reduces its cross-sectional area, thereby increasing its resistance. You should recall these ideas from earlier work on resistivity in Topic 11.

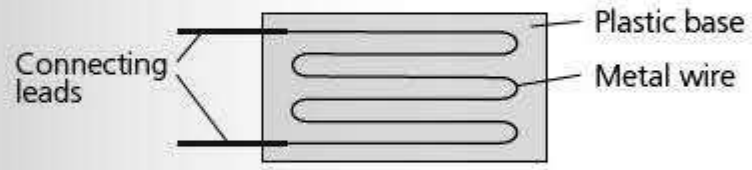

Figure 24.3 A strain gauge

The change in the resistance ΔR is proportional to the change in length ΔL of the wire, and for small changes:

$$\frac{\Delta R}{R} = 2\frac{\Delta L}{L}$$

Worked example

The resistance of a strain gauge is 150 Ω. Calculate the resistance of the same gauge when there is a strain of 0.80% on it.

Answer

Assuming the stretching of the wire causes a corresponding reduction in the cross-sectional area:

$$\frac{\Delta R}{R} = 2\frac{\Delta L}{L} = \frac{150 \times 2 \times 0.8}{100} = 2.4$$

Note that the change in length is 0.8% (or 0.8/100 or 0.008) of the original length.

Expert tip

This formula assumes that the length increases and that the cross-sectional area decreases. If it is assumed that the cross-sectional area is unchanged, the relationship is:

$$\frac{\Delta R}{R} = \frac{\Delta L}{L}$$

In the examination it is important that you make clear your assumption about the area.

Piezoelectric effect

Revised

The principle of the piezoelectric effect is described on page 128. A piezoelectric crystal can be used as the sensor in a microphone. Each incoming sound wave compresses the crystal and then allows it to expand, with each change producing a small e.m.f. that mimics the incident wave. These small e.m.f.s can be amplified and fed to an output device such as a loudspeaker.

Sensors

Revised

Sensing devices in themselves do not make a 'sensor'. They need to be included in a circuit with a voltage output that can be measured or which will trigger a relay switch. In essence a sensor consists of three parts: the sensing device, the processor and the output device (Figure 24.4).

Figure 24.4

Now test yourself

Tested

1 A strain gauge consists of a wire of total length 3.000 m and resistance 750.0 Ω. A force causes the length of the wire to increase to 3.005 m. Calculate the change in resistance of the gauge.

2 The thermistor described by the line B in Figure 24.2 (page 150) is connected in a potential divider with a resistor of 100 Ω and power supply of 9.0 V. The output from the potential divider is taken across the fixed resistor. Estimate the output voltage when the temperature of the thermistor is **a** 50 °C, **b** 100 °C.

Answers on p.216

25 Electronics

The ideal operational amplifier

Amplifiers produce more power output than power input and the **operational amplifier** (**op-amp**) is no exception. This is not a contradiction of the law of conservation of energy — energy is transferred in from elsewhere. The circuit diagram symbol for an operational amplifier is shown in Figure 25.1.

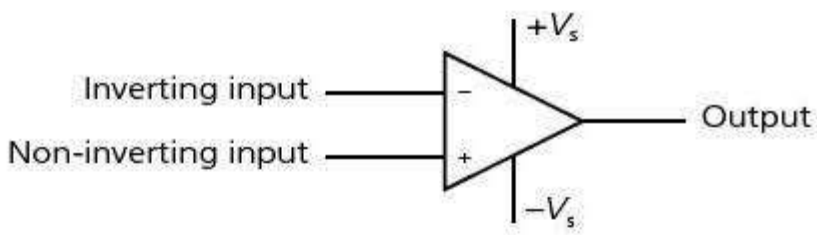

Figure 25.1

The connections to the power supply ($+V_s$ and $-V_s$) are sometimes not included in diagrams. However, in practice they are necessary. There is also (not shown on Figure 25.1) an earth or zero line. This is important because all voltages are measured relative to this. It follows that $+V_s$ and $-V_s$ have equal magnitude.

The op-amp has two inputs, the **inverting input** (shown in Figure 25.1 by a – sign) and a **non-inverting input** (shown by a + sign).

The **gain of an amplifier, *A*** is defined by the equation:

$$A = \frac{\text{output voltage}}{\text{input voltage}}$$

The **inverting input** gives an output signal that is 180° out of phase with the input signal.

The **non-inverting input** gives an output signal that is in phase with the input signal.

What is the ideal op-amp?

Revised

The ideal op-amp has the following properties:

- infinite open-loop gain
- infinite input impedance
- zero output impedance
- infinite **bandwidth**
- infinite **slew rate**

Real op-amps

In practice, the open-loop gain is not infinite but it can be as high as 100 000. The input impedance varies but is typically in excess of $10^6\,\Omega$. A high input impedance reduces the effect of the internal resistance of the input supply. The output impedance is less than $100\,\Omega$. This has to be low to reduce the fall in voltage as current is supplied from the output.

For an ideal amplifier, all frequencies should be amplified by the same factor; the bandwidth would be infinite. In a real op-amp this is never the case and the bandwidth is very small.

An infinite slew rate leads to unwanted oscillations, so a terminal capacitance is included that limits the speed of the change at the output; the slew rate is reduced.

Impedance is similar to resistance but takes into account the effect of capacitors and inductors in an a.c. circuit.

Bandwidth is the range of frequencies that are amplified by the same factor to get a faithful reproduction of the input signal.

Slew rate is a measure of how quickly the output changes with respect to the input.

Operational amplifier circuits

The op-amp as a comparator

Revised

An op-amp is a **differential amplifier** or **comparator**. This means that it amplifies the difference between the signals to the two inputs (Figure 25.2).

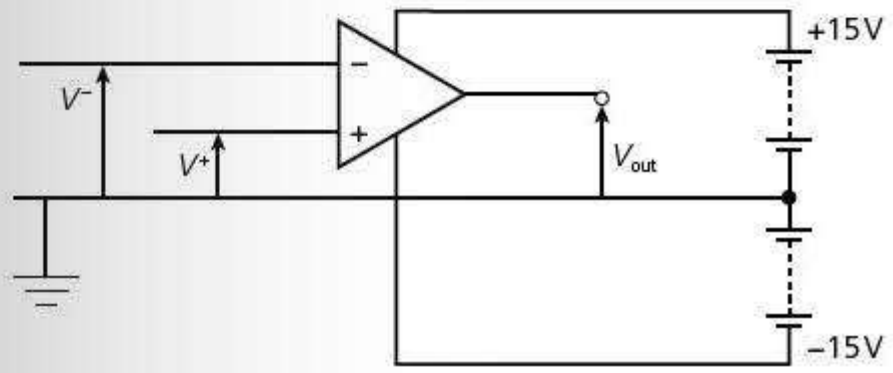

Figure 25.2 An op-amp being used as comparator

For an op-amp with input voltages V^+ and V^- and output voltage V_{out}, the open-loop gain G_0 is:

$$G_0 = \frac{V_{out}}{V^+ - V^-}$$

This means that if the strain gauge in the worked example on page 151 were connected to the non-inverting input, and the output from a potential divider with resistors of 50 Ω and 150 Ω were connected across the inverting amplifier of an op-amp of open-loop gain 10 000, then the difference between the two inputs would be:

$$V^+ - V^- = 6.78 - 6.75 = 0.03\ \text{V}$$

and

$$V_{out} = 0.03 \times 10\,000 = 300\ \text{V}$$

In practice, this would not happen. The amplifier would saturate and the output would be equal to the voltage of the power supply, 15 V.

Feedback

Revised

A fraction of the output voltage can be fed back to either the inverting input (negative feedback) or to the non-inverting input (positive feedback). Negative feedback is useful in amplification because although it reduces the gain, it gives a much wider bandwidth, produces much less distortion in the output signal and increases the stability of the output signal.

In Figure 25.3, a fraction (β) of the output voltage is fed back to the input. The minus sign is included because the output is 180° out of phase with the input, so the output is negative when the input is positive and vice versa.

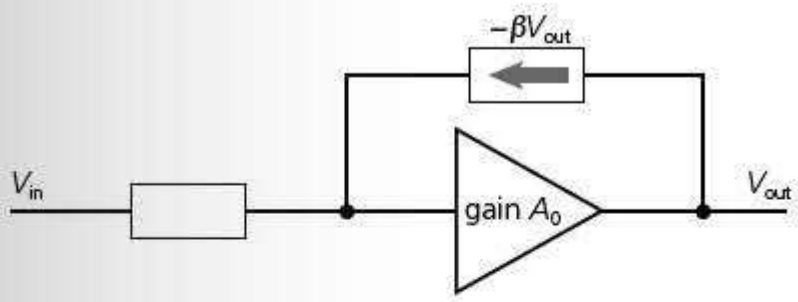

Figure 25.3 An op-amp with a fraction (β) of the output voltage fed back

So:

$V_{out} = A_0 \times$ (input to amplifier)

$V_{out} = A_0(V_{in} + \beta V_{out})$

$V_{out} - A_0\beta V_{out} = A_0 V_{in}$

Therefore the gain A of the amplifier in this configuration is $\frac{V_{out}}{V_{in}}$.

$$A = \frac{A_0}{1 + \beta A_0}$$

Worked example

An operating amplifier has an open-loop gain of 10 000. Calculate the amplifier gain:

(a) when 50% of the output is fed back to the inverting input

(b) when 10% of the output is fed back to the inverting input

Answer

(a) $A = \frac{A_0}{1 + \beta A_0} = \frac{10\,000}{1 + (0.5 \times 10\,000)} \approx 2$

(b) $A = \frac{A_0}{1 + \beta A_0} = \frac{10\,000}{1 + (0.1 \times 10\,000)} \approx 10$

The inverting amplifier

Revised

There are two ways in which an op-amp can be used as an amplifier. In the first the input voltage is connected to the inverting input, giving an output that is 180° out of phase with the input.

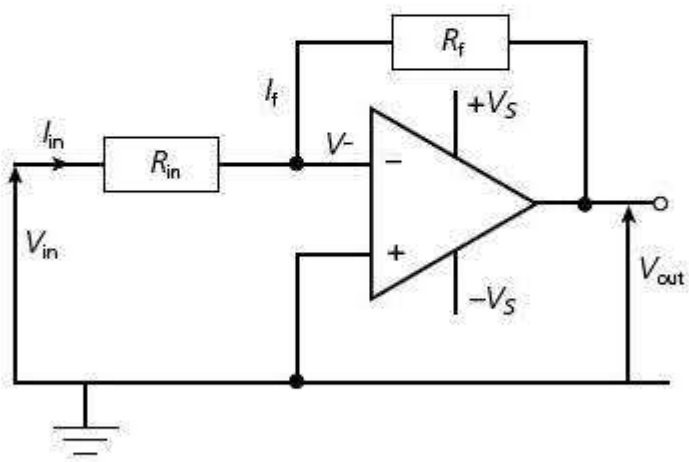

Figure 25.4 The inverting amplifier

Look at Figure 25.4. The non-inverting input is connected to earth. To avoid saturation, the voltage at the inverting voltage (V^-) must be nearly equal to the voltage at the non-inverting voltage. This is zero, hence V^- is almost at earth potential. This is known as the **virtual earth approximation**. It means that to a very close approximation:

$V_{in} = I_{in}R_{in}$

The input impedance of an op-amp is very high. Consequently, the input current to the amplifier is very small. Using Kirchhoff's first law, to a very close approximation:

$I_{in} = I_f$

where I_f is the current through the feedback resistor.

Now consider the loop starting at earth, going through V_{in}, through R_{in} and I_f, through V_{out} and back to earth. Apply Kirchhoff's second law:

$V_{in} - I_{in}R_{in} - I_fR_f - V_{out} = 0$

but $V_{in} = I_{in}R_{in}$ and therefore:

$$V_{out} = -I_f R_f$$

$$\text{gain } (A) = \frac{V_{out}}{V_{in}} = -\frac{I_f R_f}{I_{in} R_{in}}$$

but $I_{in} \approx I_f$ and therefore:

$$\boldsymbol{A = -\frac{R_f}{R_{in}}}$$

Making these approximations might appear to be an odd way of working but in practice it gives results that are well within any working tolerance. Electronics is a practical discipline, so this is all that is required.

Expert tip

It is amazing but the gain depends only on the input resistance and the feedback resistance. It is totally independent of the operational amplifier.

The non-inverting amplifier

Revised

The second way to use an op-amp as an amplifier is with the input voltage connected to the non-inverting input (Figure 25.5). This gives an output that is in phase with the input.

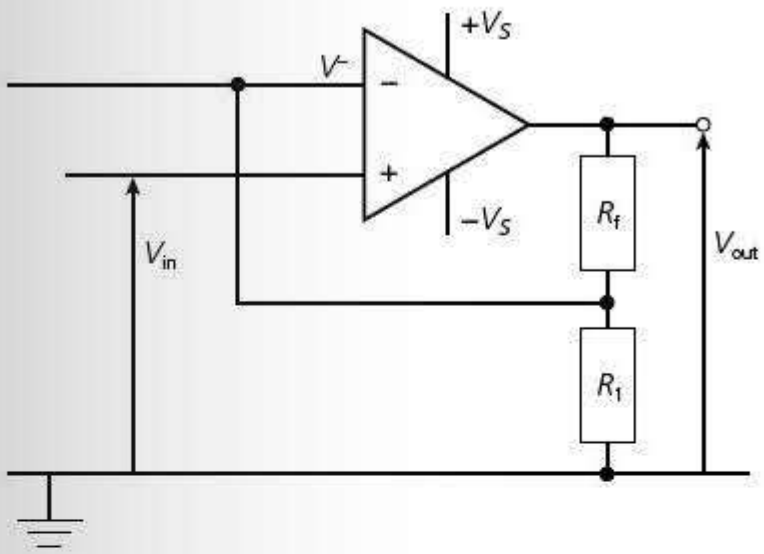

Figure 25.5 The non-inverting amplifier

In Figure 25.5, you can see that the inverting amplifier is connected to the point between the two resistors, R_f and R_1, providing the feedback. Assuming that the amplifier has not saturated:

$$\text{overall gain} = \frac{V_{out}}{V_{in}}$$

$$\boldsymbol{A = 1 + \frac{R_f}{R_{in}}}$$

Worked examples

1 An inverting amplifier, with the circuit given in Figure 25.4, has a supply voltage of 15 V. The input resistance is 100 kΩ and the feedback resistance is 5 kΩ.

Calculate the output voltage when the input voltage is:

(a) 0.2 V **(b)** 0.8 V

2 Calculate the resistance required to make a non-inverting amplifier if the gain is to be 20 and the feedback resistance is 50 kΩ.

Answer

1 **(a)** $A = -\frac{R_f}{R_{in}} = -\frac{100}{5} = -20$

$V_{out} = AV_{in} = -20 \times 0.2 = -4\,\text{V}$

(b) $V_{out} = AV_{in} = -20 \times 0.8 = -16\,\text{V}$

The supply voltage is only 15 V, so the maximum output is 15 V. The amplifier will saturate at −15 V.

2 $A = 1 + \frac{R_f}{R_1}$

$20 = 1 + \frac{50}{R_1}$

$R_1 = 1 + \frac{50}{20 - 1} = 2.6\,\text{k}\Omega$

Output devices

The relay

Revised

Op-amps are often used in control circuits. For example, they can be used to switch a heater on when the temperature falls below a prescribed level. However, even if the output voltage is (theoretically) sufficient to drive the appliance, the output current from an op-amp is very small and is not large enough to do so. The op-amp can be used to drive a relay, which will switch the power circuit on.

The circuit diagram symbol for a relay is shown in Figure 25.6. The rectangle represents the coil.

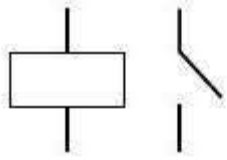

Figure 25.6

The relay is an electromagnetic switch. The op-amp drives a small current through a coil. This operates the switch, which connects/disconnects the power circuit.

Connecting a relay in a circuit

A relay cannot simply be connected to an op-amp. The relay is an electromagnetic switch and when it opens a large e.m.f. can be induced across the coil. This e.m.f. would destroy the op-amp.

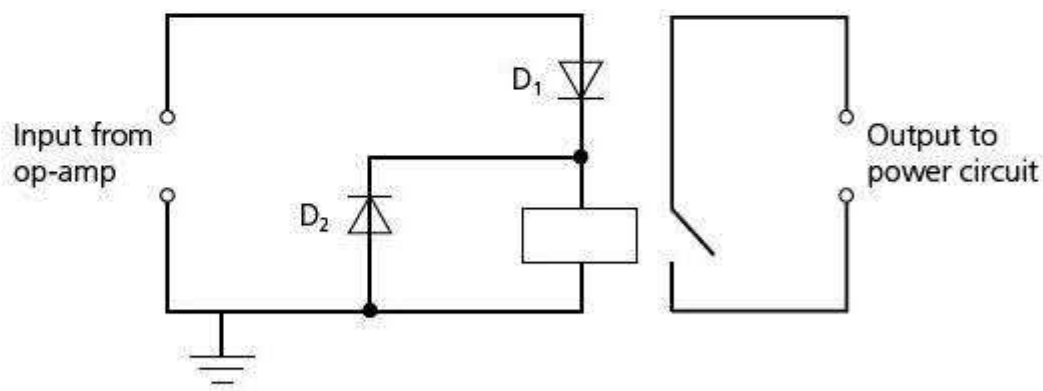

Figure 25.7 An op-amp output to a relay with protective diodes

In Figure 25.7, D_1 and D_2 are diodes. The output from the op-amp can be either positive or negative. D_1 allows current through the relay coil only when the output from the op-amp is positive. When the current is switched off, the induced e.m.f. is in the opposite direction (Lenz's law) and diode D_2 allows any current to pass harmlessly round the coil. Note that D_2 is connected so that when the input from the op-amp is positive, current will pass through the coil, not through the diode.

Monitoring the output from an op-amp

Revised

Often an output device is needed to monitor the output from an op-amp. Examples might be light-emitting diodes (LEDs), or digital or analogue meters.

The light-emitting diode

Revised

Like any diode, LEDs allow current to pass through them in only one direction. When a current passes through an LED, it emits light. LEDs have many uses and have major advantages over hot filament lights. Principally they are much more efficient at converting electrical energy to light and consequently take much less current.

LEDs are used as indicator lights in many op-amp circuits, as shown in Figure 25.8.

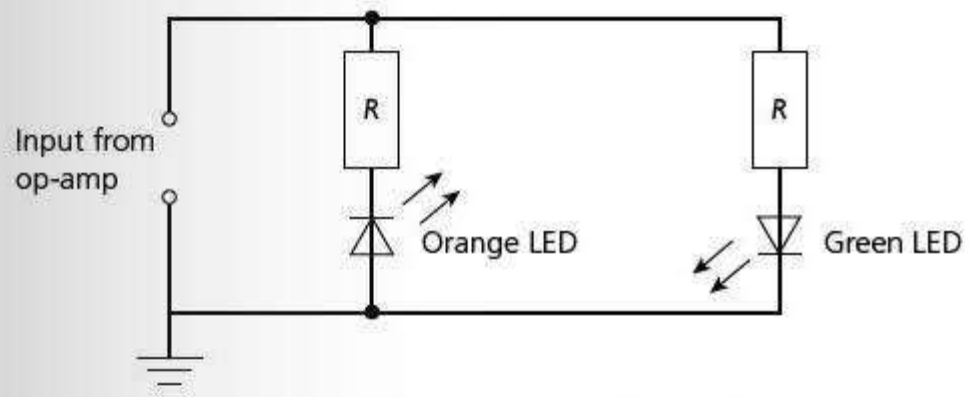

Figure 25.8 Circuit used to indicate the state of charge of a battery

In this type of circuit, when the input from the op-amp is positive the green LED lights; when the input is negative the orange LED lights. This type of circuit could be used to indicate the state of charge of a charging battery. The potential difference across a resistor in the charging circuit and the potential difference across the battery are applied to the two inputs of an op-amp acting as a comparator. When the battery is uncharged there is a relatively large current through the resistor, the potential difference is larger than that across the battery and the output from the op-amp is negative (orange LED lights). As the battery charges, the current falls. Consequently, the potential difference across the resistor falls and that across the battery increases. When the battery is fully charged the potential difference across it is greater than that across the resistor. The op-amp output becomes positive and the green LED lights.

Calibration of meters

Revised

An op-amp can be used to monitor a changing physical quantity such as temperature. The output from the op-amp is unlikely to be linear and, if this is being monitored by a voltmeter connected across the output, it will not give a direct reading of the temperature. A **calibration curve** is required. The reading on the voltmeter is recorded at different known temperatures and a graph (a calibration curve) is plotted. The temperature can now be obtained by referring to the reading on the voltmeter and then using the graph.

Now test yourself

Tested

1 Explain why the use of an operating amplifier in a sensor is particularly useful when the sensing device used is a strain gauge.

2 Give three reasons why negative feedback is employed with an operating amplifier.

3 The input resistance to an inverting operational amplifier is 500 Ω and the feedback resistance is 8 kΩ. Calculate **a** the gain of the amplifier and **b** the output voltage when the input is 2.4 mV

Answers on p.216

Revision activities

- There are several new terms in this section that you need to learn and understand. Write the name of each of the terms on a card and the meaning on a separate card, shuffle all the cards and then match them up.
- Add the following must-learn equations to your list:

$$G_0 = \frac{V_{out}}{V^+ - V^-}$$

$$A = \frac{A_0}{1 + \beta A_0}$$

$$A = -\frac{R_f}{R_{in}}$$

$$A = 1 + \frac{R_f}{R_{in}}$$

26 Magnetic fields

Concept of magnetic field

You should be familiar with magnetic fields from your earlier work. This section reviews that work in preparation for studying currents in magnetic fields.

Magnetic effects

Revised

Iron, cobalt and nickel and many of their alloys show **ferromagnetic effects**. Magnets are generally made of steel, an alloy of iron and carbon that retains magnetism much better than iron alone. The ends of a magnet are called poles. One end is the north-seeking pole and the other is the south-seeking pole (usually shortened to north and south poles).

The laws of magnetism are that:

- like poles repel
- unlike poles attract

Magnetic field shapes

Revised

Just as with gravitational fields and electric fields, a magnetic field is a region in which a force is felt. In this case, the force is the force on a single north pole placed in the field. The field shape can be shown using lines of magnetic force, which are known as **magnetic field lines** (Figure 26.1). These are imaginary lines that show the direction of the force on a free north pole when it is placed in the field. Just as with electric and gravitational field diagrams, the stronger the field, the closer together the lines are drawn.

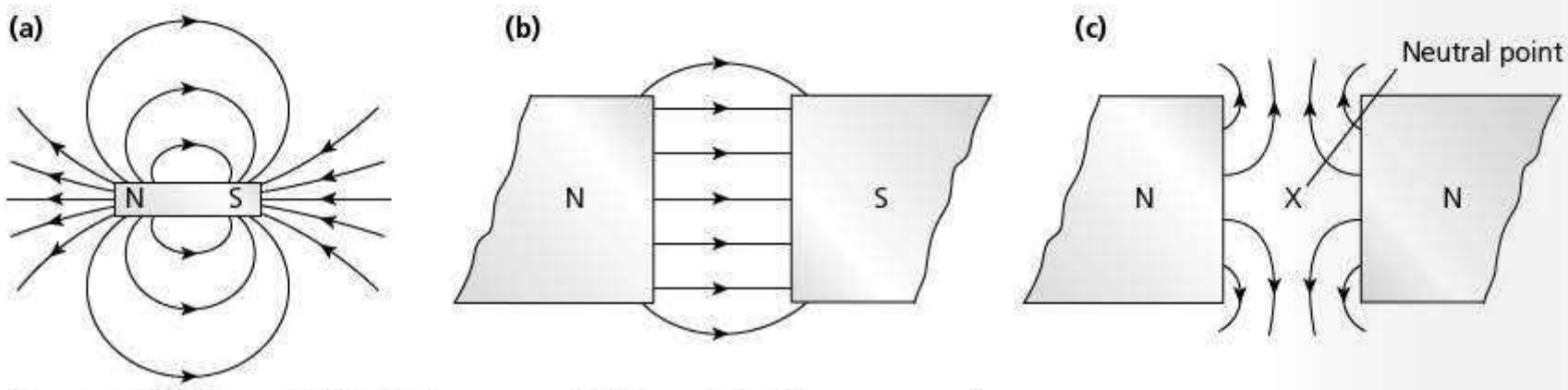

Figure 26.1 (a) Magnetic field of a bar magnet. (b) Magnetic field between opposite poles. (c) Magnetic field between like poles; at the neutral point the two fields cancel out and there will be no force on a single north pole at this point

You can see that the lines of magnetic field start at a north pole and finish on a south pole, and that they never cross or even touch.

Magnetic field of an electric current

Revised

It is not only magnets that have an associated magnetic field — currents also do. Indeed, the origin of the magnetic field in a magnet is due to circulating charges (currents) in the atoms that make up the magnet.

The magnetic field of a straight current-carrying conductor can be investigated using the apparatus shown in Figure 26.2.

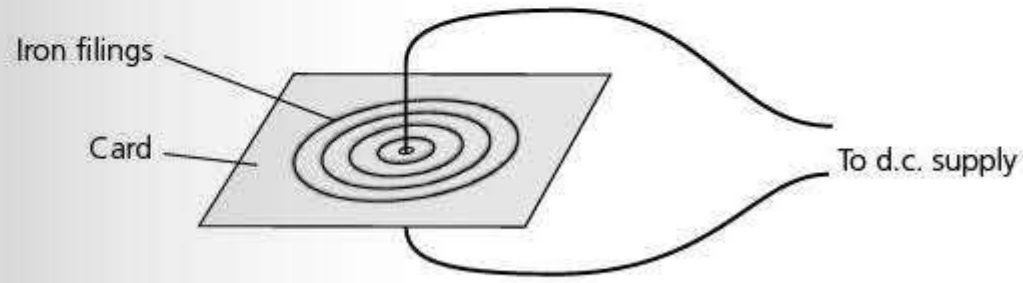

Figure 26.2

The field of a straight current-carrying conductor is a set of concentric circles. The direction of the field depends on the current direction. You can work out the direction by using the screw rule, 'Imagine you are screwing a screw into the paper. The screw driver must turn clockwise, the same direction as the field lines for a current going into the plane of the paper' (Figure 26.3).

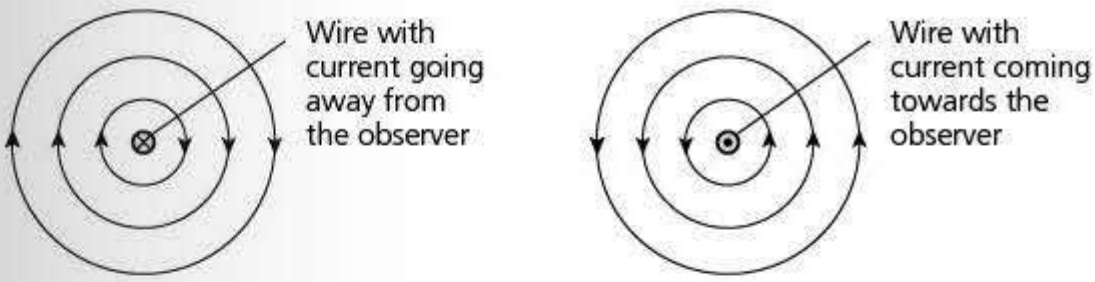

Figure 26.3

The magnetic fields of pairs of conductors with currents in the opposite and same directions are shown in Figure 26.4. In (a) the currents are in opposite directions — note that this also shows the field of a narrow coil viewed at 90° to the axis of the coil. In (b) the currents are in the same direction — note the neutral point where the fields cancel each other out.

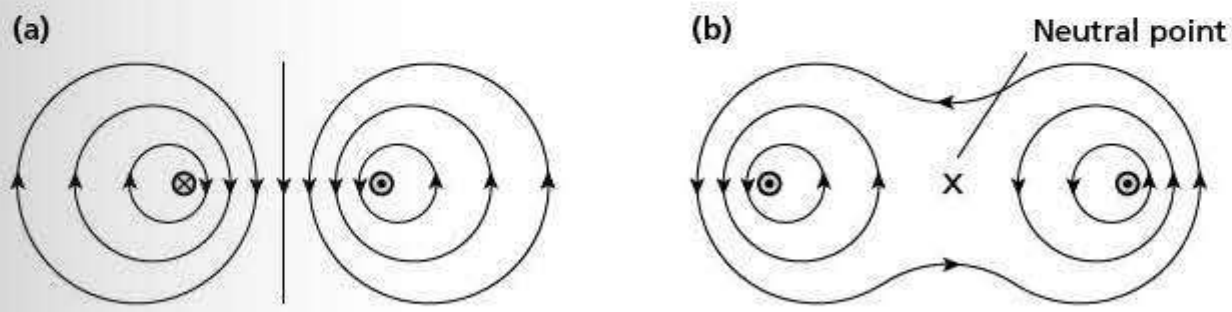

Figure 26.4

A solenoid is a long coil — its magnetic field is shown in Figure 26.5.

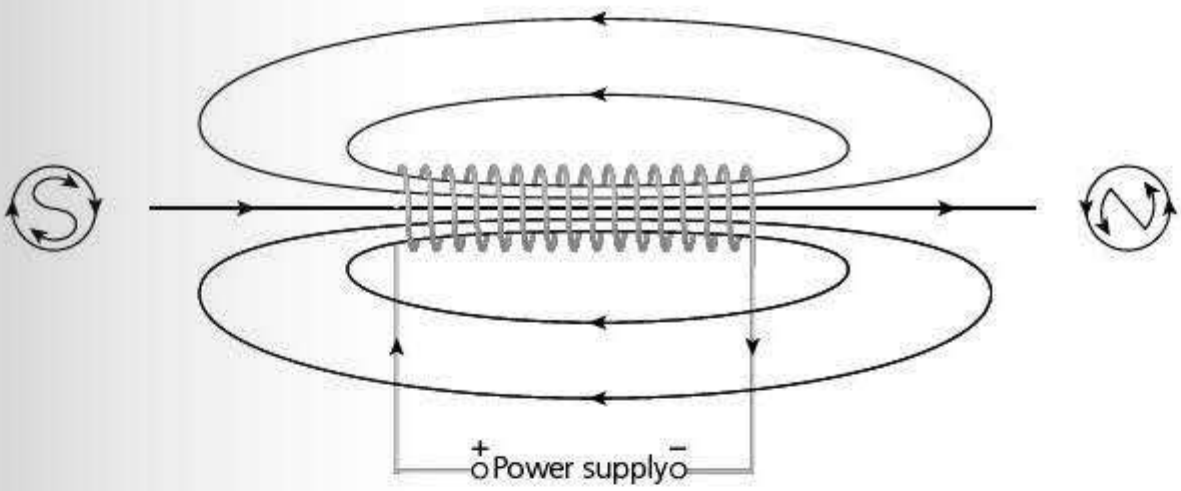

Figure 26.5

You should note that:

- the field is very strong inside the solenoid
- the field is similar to that of a bar magnet

The circles containing the N and S show a way of remembering which end of the solenoid acts as which pole. If you look at the right-hand end of the solenoid, the current direction is anticlockwise, the same as the arrows on the N. Look at the left-hand end. The current is in a clockwise direction, the same as the arrows on the S.

Solenoids are often used to make electromagnets, with the solenoid being wound round an iron former. The presence of the iron greatly increases the strength of the magnetic field inside (and near) the solenoid.

Force on a current-carrying conductor

The motor effect: Fleming's left-hand rule

Revised

When a current-carrying conductor lies in a magnetic field there is a force on the conductor. This is called the **motor effect** (Figure 26.6).

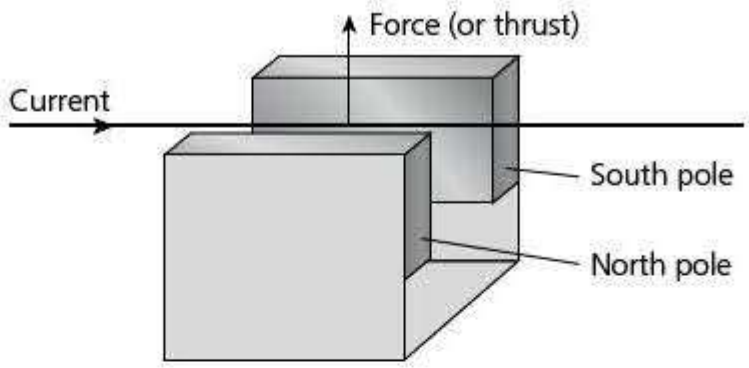

Figure 26.6 The force on a current-carrying conductor in a magnetic field

You will observe that the current and the field are at right angles to each other, and that the force is at right angles to both of these, making a set of three-dimensional axes. There will be no force on the conductor if it is parallel to the field; it requires at least a component of the current at right angles to it.

To help remember the specific directions of the different vectors we use **Fleming's left-hand rule** (Figure 26.7), in which the **fi**rst finger represents the **fi**eld, the se**c**ond finger the **c**urrent and the **th**umb the **th**rust (or force)

Figure 26.7 Fleming's left-hand rule

The magnitude of the force depends on:

- the size of the current
- the length of conductor in the field
- the angle the conductor makes with the field (Figure 26.8)

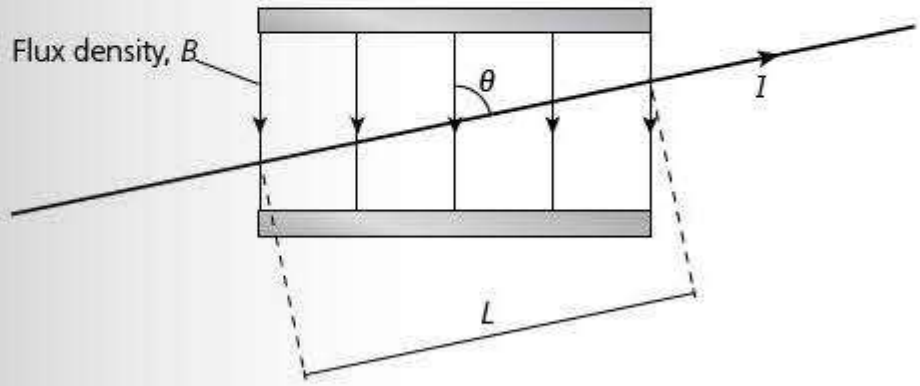

Figure 26.8 Force on a current-carrying conductor at angle θ to a magnetic field

A conductor of length L carrying a current I, lying at an angle θ to the field will experience a force F vertically into the plane of the paper.

$$F \propto IL \sin\theta$$

This can be written as:

$$\boldsymbol{F = BIL \sin\theta}$$

where B is a constant, which can be considered as the **magnetic field strength**, although for historical reasons it is more usual to call it the **flux density**. Flux density is defined from the rearranged equation:

$$B = \frac{F}{IL \sin\theta}$$

The units of flux density are $N A^{-1} m^{-1}$; $1 N A^{-1} m^{-1}$ is called **1 tesla** (T).

Flux density is numerically equal to the force per unit length on a straight conductor carrying unit current at right angles to the field.

1 tesla is defined as the magnetic flux density that, acting normally to a straight conductor carrying a current of 1 A, causes a force per unit length of $1 N m^{-1}$.

Worked example

A copper power cable of diameter 2.5 cm carries a current of 2000 A to a farm. There is a distance of 50 m between successive telegraph poles.

(a) Calculate the magnetic force on a section of the cable between two telegraph poles due to the Earth's magnetic field. (You may consider the wire to be at right angles to the Earth's magnetic field.)

(b) Compare this with the gravitational force on the cable.

(density of copper = $8900 kg m^{-3}$; flux density of the Earth's field = $30 \mu T$)

Answer

(a) $F = BIL \sin\theta = 30 \times 10^{-6} \times 2000 \times 50 \times \sin 90 = 3.0 N$

(b) volume of the copper wire $= \pi r^2 L = \pi \times \left(\frac{2.5 \times 10^{-2}}{2}\right)^2 \times 50 = 0.025 m^3$

mass = density × volume = 8900 × 0.025 = 220 kg

weight = mg = 220 × 9.8 ≈ 2200 N

This is almost three orders of magnitude (i.e. ×1000) bigger than the magnetic force on the cable.

Typical mistake

It is not easy to remember which angle is θ. Make a particular note that it is the angle between the lines of flux and the wire. It is worth making a separate note of this and re-checking just before the examination.

Measurement of flux density

Revised

The flux density can be investigated using a simple current balance (Figure 26.9).

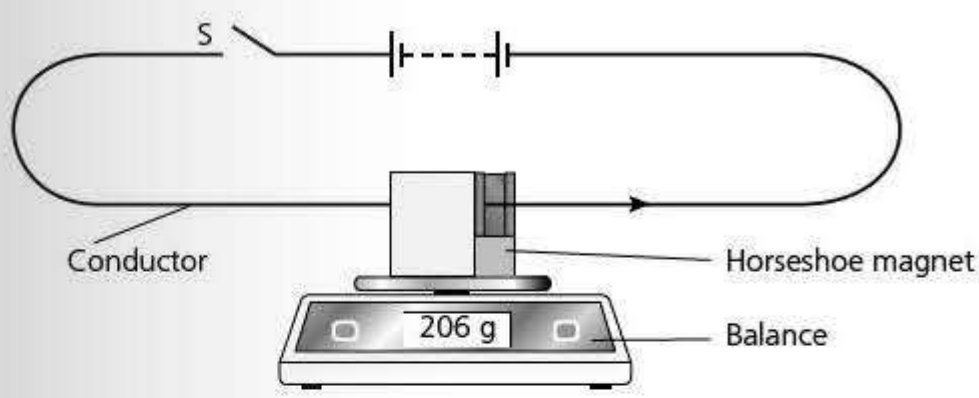

Figure 26.9 A current balance

The current balance relies on Newton's third law. Not only does the magnetic field cause a force on the current; the current causes an equal-sized force on the magnets but in the opposite direction. So the difference in the readings on the top-pan balance when switch S is open and closed gives a measure of the electromagnetic force.

Worked example

A student uses a current balance to measure the magnetic flux density of a horseshoe magnet. He measures the length of the pole pieces (8.1 cm) and places the magnet on the top-pan balance, which reads 95.452 g. He sets up the current balance as shown in Figure 26.9 and closes the switch. The ammeter reading is 2.3 A, and the reading on the top-pan balance falls to 95.347 g.

(a) Calculate the flux density between the poles of the magnets.

(b) Discuss the effect on the result if the magnetic pole pieces are not exactly parallel to the wire.

(c) Discuss one other factor that may limit the accuracy of the result.

Answer

(a) change in the balance reading = 95.452 − 95.347 = 0.105 g

force on the magnets = 1.03×10^{-3} N

$$B = \frac{F}{IL\sin\theta} = \frac{1.03 \times 10^{-3}}{2.3 \times 8.1 \times 10^{-2} \times \sin 90} = 5.5 \times 10^{-3}\,\text{T}$$

(b) It will have no effect, because although the force per unit length of wire would be reduced by a factor of $\sin\theta$, where θ is the angle the wire makes with the magnetic field lines, the length of wire between the poles will increase by the same factor. So the two changes cancel each other out.

(c) There is likely to be some fringing of the field at the edges of the poles, thus increasing the length of wire in the field. However, this might be reduced because the field at the edges of the pole pieces is weaker than that near the centre. In practice, this system only measures a mean (or average) field.

Forces on parallel current-carrying conductors

Revised

You should already know that a current has an associated magnetic field.

Figure 26.10 shows parallel conductors with currents in opposite directions. It is a model in which the fields are considered separately. In practice, the two fields will combine.

Consider the effect of the field of the lower conductor on that of the upper conductor. The magnetic field of the lower conductor is to the right of the page and the current in the upper conductor is vertically upwards, out of the plane of the paper. If you apply Fleming's left-hand rule you will see that there will be a force on the upper conductor away from the lower conductor.

If you consider the effect of the upper conductor on the lower conductor you will see that the force is vertically down the page. The two conductors repel.

A similar analysis shows that if the currents are both in the same direction then the two conductors will attract.

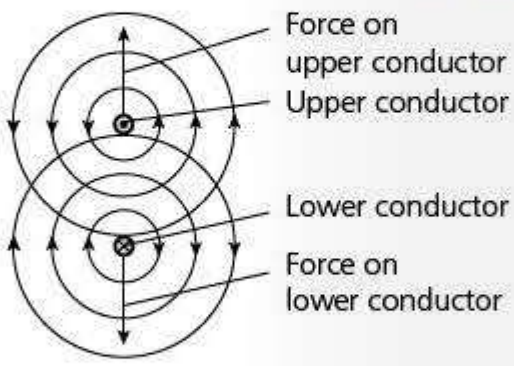

Figure 26.10 Fields of two current-carrying parallel conductors

Expert tip

The base unit of current, the ampere, is defined in terms of the force per unit length between two parallel current-carrying conductors.

Force on a moving charge

Forces on charged particles in a magnetic field

Revised

Electric current is a flow of electric charge, so the magnetic force on a current is the sum of the forces on all the moving charge carriers that make up the current. Alternatively, we could think of a beam of charged particles as a current. Either way we can deduce that the force on a charge q moving through a field of flux density B at speed v is given by the formula:

$$F = Bqv\sin\theta$$

where θ is the angle the velocity makes with the field.

The direction of the force on the particle can be found by using Fleming's left-hand rule. Remember that the second finger shows the direction of the conventional current. So the thumb shows the force direction on a positive charge; a negative charge will experience a force in the opposite direction.

Study Figure 26.11. The force is at right angles to both the field and the velocity. As the velocity changes, so does the direction of the force. Consequently, the particle travels in a circular path, with the magnetic force providing the centripetal force.

You will study the tracks of charged particles in more detail in the section on charged particles (pages 164–166).

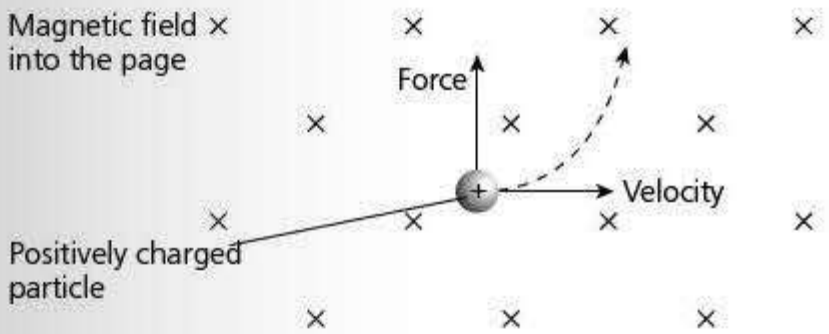

Figure 26.11 The path of a charged particle travelling with a velocity at right angles to the magnetic field

The Hall effect and Hall probe

Revised

Figure 26.12 shows a thin slice of a semiconductor.

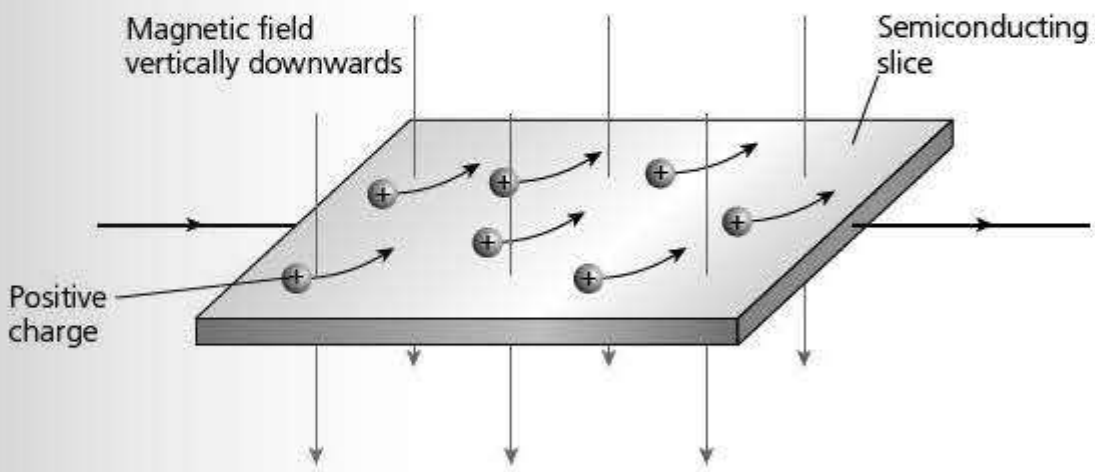

Figure 26.12

In this example, the current is carried by positive charge carriers. When a magnetic field is applied, the charge carriers are pushed to the rear side of the slice. This produces an e.m.f. between the front and rear edges of the slice, known as the Hall voltage (V_H).

Consider a slice of conductor of thickness t and width w carrying a current I at right angles to a magnetic field of flux density B (Figure 26.13).

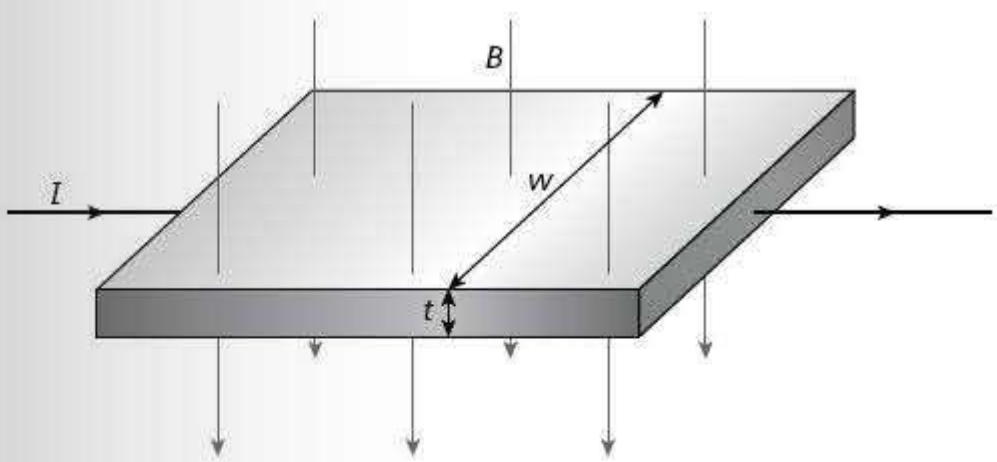

Figure 26.13

If each charge carrier has a charge q, the force on each charge carrier $F_{magnetic} = Bqv$, where v is the velocity of the charge carriers.

This force tends to push the charge carriers across the slice, setting up a voltage V_H across the slice.

The electric field produced by the migrating charge is:

$$E = \frac{\Delta\phi}{\Delta t}$$

The electric force on each charge is:

$$F_{electric} = q\frac{V_H}{w}$$

As charge builds up it will limit further charge moving across the slice. Equilibrium will be reached when the magnetic force ($F_{magnetic}$) is equal to this electric force ($F_{electric}$).

$$\text{So } F_{electric} = q\frac{V_H}{w} = F_{magnetic} = Bqv$$

$$\text{and } \frac{V_H}{w} = Bv$$

Now, $I = nAvq$ (see page 64). Substituting:

$$v = \frac{I}{nAq}$$

in the previous equation gives:

$$\frac{V_H}{w} = \frac{BI}{nAq}$$

A is the cross-sectional area = wt. Therefore:

$$\frac{V_H}{w} = \frac{BI}{nwtq}$$

$$\text{So } V_H = \frac{BI}{ntq}$$

The variation in Hall voltage with flux density means the effect can be used to measure magnetic flux density. The Hall voltage produced in a metallic conductor is much less than in a semiconductor, so this device is always made from a semiconducting material.

When using a Hall probe care must be taken that the semiconductor slice is at right angles to the field being investigated.

Revision activity

- Inspect the formula for the Hall voltage and explain why the Hall voltage for semiconductors (for the same current and flux density) is greater than for metals. (You should consider the numbers of charge carriers in both types of material and the effect on the drift velocity of those carriers to produce the same current.)

Worked example

A strip of copper, 24 mm wide and 0.20 mm thick, is at right angles to a magnetic field of flux density 4.0×10^{-4} T. A current of 3.0 A passes through the copper strip. Calculate the Hall voltage produced across the width of the strip. (number of free electrons per unit volume = $1.8 \times 10^{29}\ m^{-3}$)

Answer

$$V_H = \frac{BI}{ntq} = -\frac{4.0 \times 10^{-4} \times 3.0}{1.8 \times 10^{29} \times 2.0 \times 10^{-4} \times 1.6 \times 10^{-19}} = 2.1 \times 10^{-10}\ V$$

Deflection of charged particles in fields

Revised

Electric fields

Accelerating field

An electric field can be used to accelerate charged particles in the direction of the field. Early particle accelerators used electrostatic fields in this way. The kinetic energy given to the particle carrying charge q is:

$$E_k = Vq$$

Therefore:

$\frac{1}{2}mv^2 = Vq$

Worked example

Calculate the voltage through which a proton of mass 1.66×10^{-27} kg must be accelerated to reach a speed of $8 \times 10^6\,\mathrm{m\,s^{-1}}$.

Answer

$\frac{1}{2}mv^2 = Vq$

Rearrange the equation:

$$V = \frac{\frac{1}{2}mv^2}{q} = -\frac{0.5 \times 1.66 \times 10^{-27} \times (8.0 \times 10^6)^2}{1.6 \times 10^{-19}} = 3.3 \times 10^5\,\mathrm{V}$$

The electronvolt: a useful unit

In the example above the proton was accelerated through a potential difference of 3.3×10^5 V. To calculate its energy we use the formula:

$E = Vq$

$= 3.3 \times 10^5 \times 1.6 \times 10^{-19} = 5.3 \times 10^{-14}$ J

1.6×10^{-19} C is the charge on an electron and the energy of the proton described above is often quoted as 3.3×10^5 eV, where eV is the abbreviation for electronvolts.

The **electronvolt** is a unit of energy equal to the energy gained by an electron when it is accelerated through a potential difference of 1 volt.

Worked examples

1 Deduce the energy gained by a proton when it is accelerated through a potential difference of 2.0 MV. Give your answer in both electronvolts and joules.

2 Deduce the energy gained by an alpha particle when it is accelerated through a potential difference of 2.0 MV. Give your answer in electronvolts.

Answers

1 2.0 MV = 2.0×10^6 V

charge on the electron = 1.6×10^{-19} C

proton gains 2.0×10^6 eV of energy = $2.0 \times 10^6 \times 1.6 \times 10^{-19} = 3.2 \times 10^{-19}$ J

2 The charge on an alpha particle is $2e$, so:

energy gained = $2 \times 2.0 \times 10^6 = 4.0 \times 10^6$ eV

Uniform field at right angles to the motion of the charged particle

Consider a positively charged particle moving at right angles to a uniform electric field (Figure 26.14).

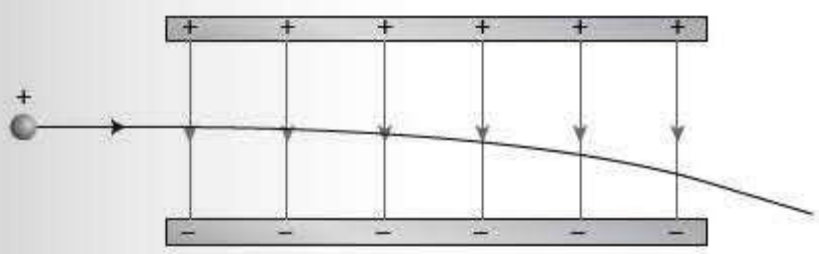

Figure 26.14 A positively charged particle moving at right angles to a uniform electric field

The force on the particle is vertically downwards. The path that the particle takes is similar to that of a body thrown in a uniform gravitational field (page 23). There is no change to the horizontal component of the velocity but there is a constant acceleration vertically downwards. This produces the typical parabolic path.

Worked example

Figure 26.15 shows the path of an electron travelling through a uniform electric field.

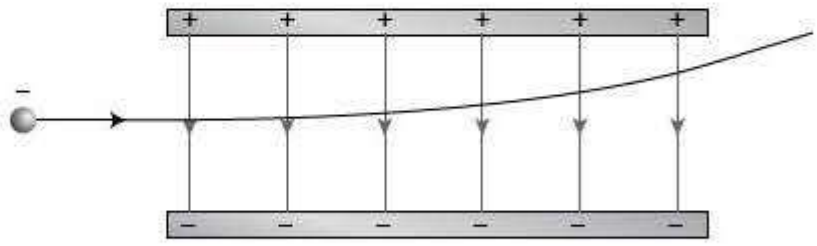

Figure 26.15

On a copy of the diagram, sketch:

(a) the path that a positron moving at the same speed would take through the same field; label this A

(b) the path that a proton moving at the same speed would take through the same field; label this B

Answer

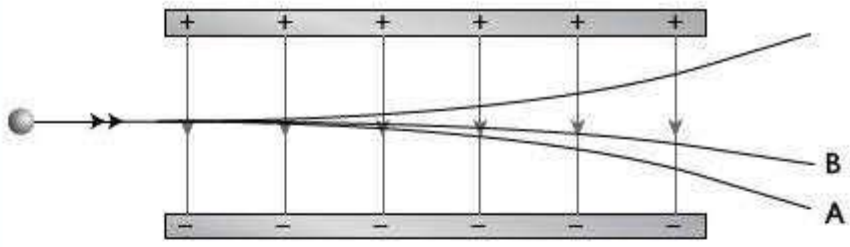

Figure 26.16

Expert tip

A positron has the same mass as an electron and the same sized charge, but the charge is positive. Consequently it is deflected the same amount as the electron but in the opposite direction. The proton has the same charge as the positron but is very much more massive, so it will be deflected in the same direction as the proton but very much less. In practice the deflection would be virtually undetectable.

Magnetic fields

Revised

Measurement of *e/m*

You saw on page 162 that a particle of mass m, carrying a charge q moving with a velocity v at right angles to a uniform magnetic field of flux density B, experiences a force $F = Bqv$, and travels in a circular path. This force acts as the centripetal force, so:

$$Bqv = \frac{mv^2}{r}$$

Hence:

$$\frac{q}{m} = \frac{v}{Br}$$

In Figure 26.17 the electron gun fires electrons vertically upwards. The field coils produce a uniform magnetic field into the plane of the paper, which causes the electrons to travel in a circular path. There is a trace of an unreactive gas in the tube. When the electrons collide with the gas atoms they cause ionisation (or excitation). When the atoms drop back down to their ground state they emit a pulse of light. In this way the path of the electrons can be observed. The energy of the electrons is calculated from the accelerating potential, and the diameter of their circular path is measured with a ruler.

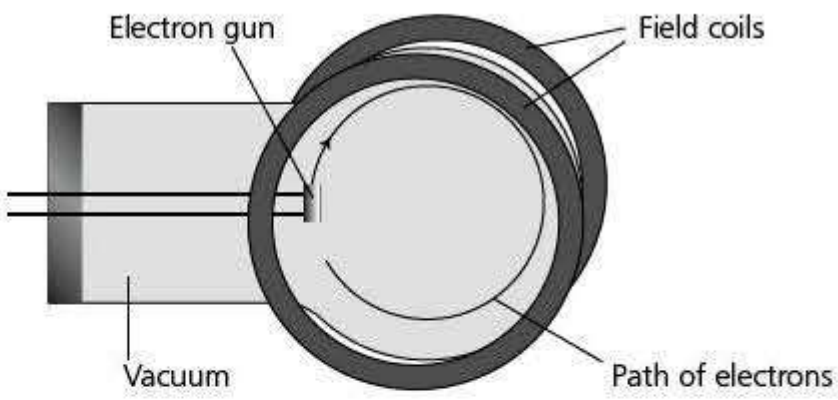

Figure 26.17 Apparatus for measurement of *e/m*

Worked example

Electrons travelling at a velocity of $4.0 \times 10^6\,\mathrm{m\,s^{-1}}$ enter a uniform magnetic filed of 0.60 mT at right angles to the field. The electrons then travel in a circle of diameter 7.6 cm. Calculate the value of e/m for the electron and from this calculate the mass of an electron.

Answer

radius of the circle $= \dfrac{7.6 \times 10^{-2}}{2} = 3.8 \times 10^{-2}\,\mathrm{m}$

$$\frac{e}{m} = \frac{v}{Br} = \frac{4.0 \times 10^6}{0.6 \times 10^{-3} \times 3.8 \times 10^{-2}} = 1.75 \times 10^{11}\,\mathrm{C\,kg^{-1}}$$

The charge on the electron is $1.6 \times 10^{-19}\,\mathrm{C}$, $\dfrac{e}{m} = 1.75 \times 10^{11}\,\mathrm{C\,kg^{-1}}$ so:

$$m = \frac{e}{1.75 \times 10^{11}} = \frac{1.6 \times 10^{-1}}{1.75 \times 10^{11}} = 9.1 \times 10^{-31}\,\mathrm{kg}$$

Velocity selectors

Revised

For more sophisticated measurement of q/m the speed of the particles must be known much more precisely. One method of producing a beam of particles of all the same speed is to use crossed magnetic and electric fields (Figure 26.18).

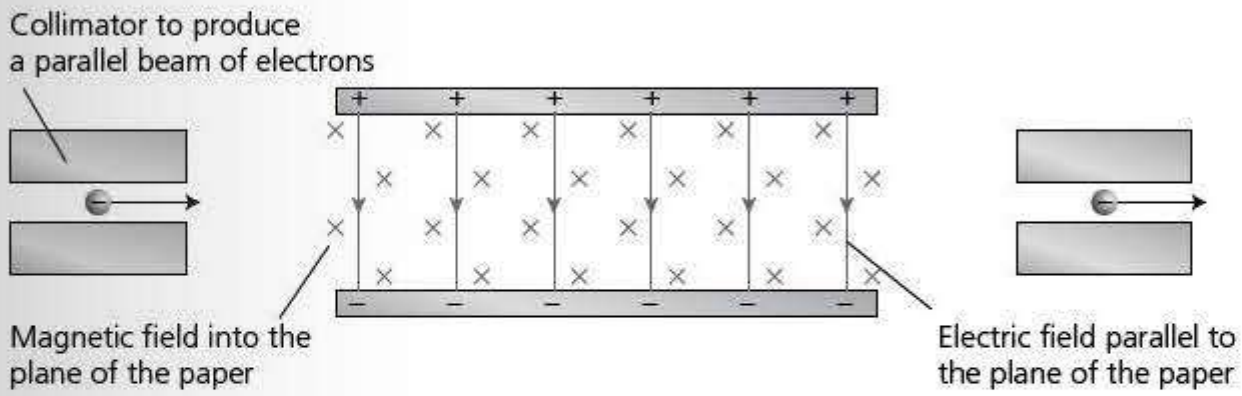

Figure 26.18 A velocity selector using crossed electric and magnetic fields

The force on the electrons from the electric field is vertically upwards:

$$F_E = eE$$

The force on the electrons from the magnetic field is vertically downwards:

$$F_B = Bev$$

For electrons of a particular velocity the two forces balance and cancel each other out. These electrons will be undeflected and will pass straight through the apparatus and through the second collimator. Electrons of a slightly higher (or lower) speed will have a larger (or smaller) magnetic force on them and will be deflected and will not pass through the second collimator.

For the selected velocity:

$$F_E = F_B$$

Therefore:

$$eE = Bev$$

and:

$$v = \frac{E}{B}$$

Although this equation has been worked out for electrons, neither the charge nor the mass of the particle feature in the final equation and it is valid for any charged particle.

Worked example

In order to find the velocity of alpha particles from a radioactive source, a narrow beam of the particles is incident on crossed electric and magnetic fields. The alpha particles travel straight through the fields when the electric field strength is $8.6 \times 10^3\,\mathrm{V\,m^{-1}}$ and the magnetic flux is 0.48 T.

Calculate the velocity of the alpha particles.

Answer

$$v = \frac{E}{B} = \frac{8.6 \times 10^3}{0.48 \times 10^{-3}} = 1.8 \times 10^7\,\mathrm{m\,s^{-1}}$$

Revision activity

- Look up on the internet photographs of the tracks of fundamental particles produced in high-energy collisions. See if you can identify which particles have opposite charges, and those that have a very high mass.

Magnetic fields due to currents

Comparison of force fields

Revised

Table 26.1 shows the differences and similarities between the three types of force field we have met.

Table 26.1

	Gravitational	Electric	Magnetic
Stationary mass	Attractive force parallel to the field	None	None
Moving mass	Attractive force parallel to the field	None	None
Stationary charge	None	Attractive or repulsive force depending on type of charge, parallel to the field	None
Moving charge and electric current	None	Attractive or repulsive force depending on type of charge, parallel to the field	Force at right angles to both the field and the velocity of the charge/current. Force is a maximum when the velocity is at right angles to the field/current, and zero when the velocity/current is parallel to the field

Nuclear magnetic resonance imaging

Theory of nuclear magnetic resonance

Revised

The nuclei of some atoms have a property called spin — you can imagine them as tiny spinning tops. Because the nuclei are charged, this spin makes them behave like tiny magnets. When in a magnetic field they do not spin exactly parallel to the field, and will consequently 'wobble' or precess about the field direction (Figure 26.19).

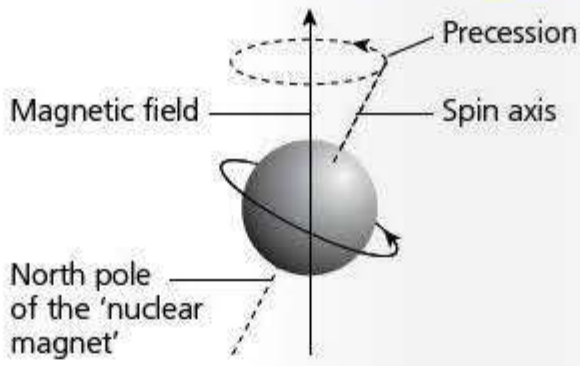

Figure 26.19 Nuclear spin and precession in an applied magnetic field

The angular frequency of the precession is known as the **Larmor frequency**. It depends on the particular type of nucleus and is proportional to the strength of the flux density of the applied magnetic field.

In living tissue there are large amounts of water, and hence hydrogen atoms; it is the hydrogen nuclei (protons) that are used in NMRI scans.

In general the nuclei spin so that they are in the lowest energy state, with the tiny magnets as in Figure 26.19. A few, however, will move into a higher energy state with the magnet reversed. Nuclear magnetic resonance relies on encouraging more nuclei to flip into the higher energy state. This is done by superimposing, on top of the strong permanent field, a field that oscillates at the

same frequency as the frequency of precession, which is in the radio frequency (RF) region. This is **nuclear magnetic resonance**.

Once the RF field is switched off, the nuclei will drop back into the lower energy state. This is called **relaxation**. When the atom drops back into the lower energy state in this way, a photon of energy is released. This is detected by the same coils that previously supplied the RF frequency field. The time the atoms take to relax (the **relaxation time**) is dependent on the type of tissue the atom is in; watery tissues have long relaxation times, whereas fatty tissues have much shorter relaxation times. From the different relaxation times a picture of the patient's internal organs can be built up.

NMRI scanning procedure

Revised

In an NMRI scan the patient lies on a bed surrounded by large coils that supply the uniform field. As well as this uniform field, gradient coils produce a non-uniform field that varies across the length, width and depth of the patient. This means that the resonant frequency is slightly different for each small part of the body. This can then be identified by the computer.

The RF field is applied in pulses. The patient moves slowly through the coils with a set of information taken at each position. This information is sent to a computer, which builds up an image (Figure 26.20).

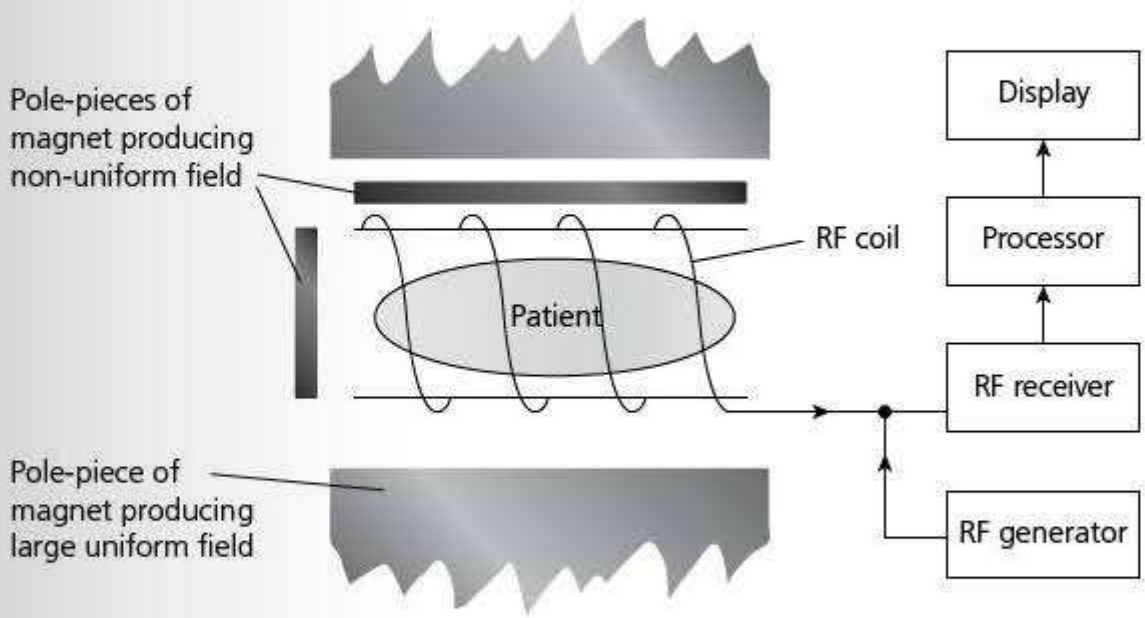

Figure 26.20 The principles of a magnetic resonance scanner

Now test yourself

Tested

1 A conductor carrying a current of 2.4 A is placed at right angles to a magnetic field of flux density 2.7×10^{-3} T. Calculate the force per unit length on the conductor.

2 A current-carrying conductor of length 25 cm at an angle of 60° to a magnetic field of flux density 4.8×10^{-3} T experiences a force of 3.3×10^{-4} N. Calculate the current in the conductor.

3 A particle of mass 6.7×10^{-27} kg and charge 3.2×10^{-19} C is moving at right angles to a magnetic field of flux density 7.5×10^{-3} T at a speed of 2.3×10^{7} m s^{-1}.

   a Calculate **i** the force on the particle and **ii** the acceleration of the particle.

   b Comment on the direction of the acceleration.

Answers on p.216

27 Electromagnetic induction

Laws of electromagnetic induction

Moving a wire perpendicularly to a magnetic field, as in Figure 27.1, induces an e.m.f. across the ends of the wire.

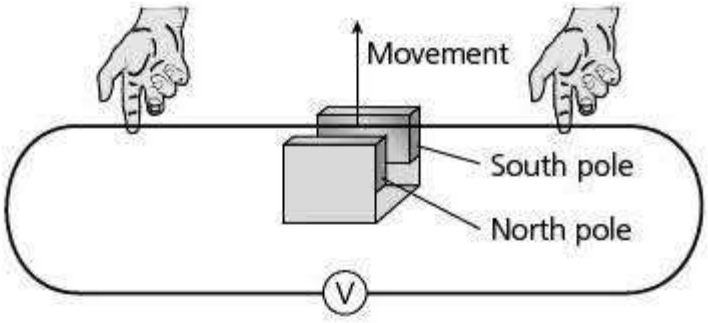

Figure 27.1 Induction of an e.m.f.

The magnitude of the e.m.f. depends on the strength of the magnet, the length of wire in the field and the speed at which it is moved. The direction of the e.m.f. depends on the direction in which the wire is moved.

If a second loop is made in the wire the induced e.m.f. is doubled (Figure 27.2).

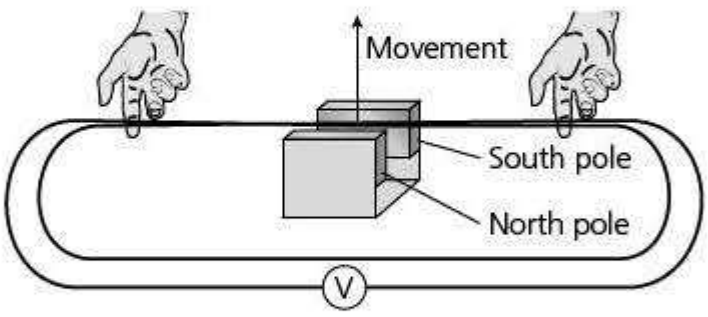

Figure 27.2 Effect of two coils of wire on the induction of an e.m.f.

Further loops show that the induced e.m.f. is proportional to the number of loops, *N*. In practice, most electromagnetic devices consist of a coil of many turns of wire rather than just a single wire.

Magnetic flux

Revised

A wire moving through a magnetic field of flux density *B* sweeps out an area *A* as shown in Figure 27.3.

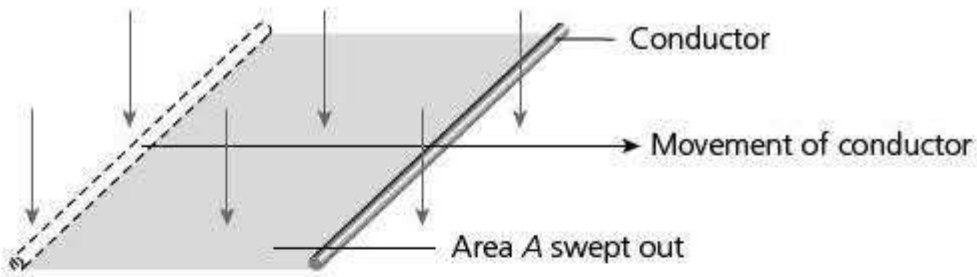

Figure 27.3

The flux density multiplied by this area is called the **magnetic flux** and has the symbol ϕ ($\phi = BA$). The unit of ϕ is the weber (Wb).

$1\,\text{Wb} = 1\,\text{T}\,\text{m}^2$

Magnetic flux is the product of magnetic flux density and the area, normal to the field, through which the field is passing.

This leads to the following equation for the induced e.m.f. E:

$$E = -N\frac{\Delta\phi}{\Delta t}$$

This is often written:

$$E = -\frac{\Delta(N\phi)}{\Delta t}$$

$N\phi$ is called the magnetic **flux linkage** and is given the symbol Φ.

The magnetic flux linkage of a coil is the product of the magnetic flux passing through a coil and the number of turns on the coil.

Worked example

A small coil of cross-sectional area 2.4 cm^2 has 50 turns. It is placed in a magnetic field of flux density 4.0 mT, so that the flux is perpendicular to the plane of the coil. The coil is pulled out of the field in a time of 0.25 s. Calculate the average e.m.f. that is induced in the coil.

Answer

initial flux linkage $\Phi = N\phi = NBA = 50 \times 4 \times 10^{-3} \times 2.4 \times 10^{-4} = 4.8 \times 10^{-5}$ Wb

$$E = -\frac{\Delta\Phi}{\Delta t} = -\frac{4.8 \times 10^{-5}}{0.25} = 1.9 \times 10^{-4}\,\text{V}$$

Expert tip

You can deduce from the formula:

$$W = \frac{\Delta\Phi}{\Delta t}$$

that:

$$1\,\text{Wb s}^{-1} = 1\,\text{V}$$

Laws relating to induced e.m.f.

Revised

Faraday's law of electromagnetic induction states that:

The induced e.m.f. is proportional to the rate of change of magnetic flux linkage.

Note that it is the *rate of change* of flux linkage, not just cutting through flux linkage: if a wire is in a magnetic field that changes, an e.m.f. is induced just as though the wire had been moved. The wire or coil 'sees' a disappearing magnetic flux.

Lenz's law is really a statement of the conservation of energy. When a current is induced in a conductor, that current is in a magnetic field. Therefore, there is a force on it due to the motor effect. Work must be done against this force in order to drive the current through the circuit. A formal statement of Lenz's law is:

The direction of the induced e.m.f. is always in such a direction so as to produce effects to oppose the change that is causing it.

Revision activity

- Add the following to your list of must-learn equations:

$$E = -\frac{\Delta(N\phi)}{\Delta t}$$

Now test yourself

Tested

1 A small coil of wire has 2000 turns and a cross-sectional area of 2.0 cm^2. It is placed with its axis parallel to a magnetic field of flux density 4.8×10^{-3} T.

   a Calculate **i** the flux through the coil and **ii** the flux linkage with the coil.

   b The coil is rotated so that its axis is at 45° to the field. Calculate the flux linkage in this position.

2 An aeroplane of wingspan 12 m flies at a speed of 140 m s^{-1}, at right angles to the vertical component of the Earth's magnetic field. Calculate the e.m.f. induced across the wing tips of the aeroplane. (vertical component of the Earth's magnetic field = 40 μT)

3 The coil of an electromagnet has 2000 turns and cross-sectional area 0.05 m^2. The coil carries a current that produces a magnetic field of flux density 5.6 mT. A switch is opened and the current and consequent magnetic field fall to zero in 120 μs. Calculate the e.m.f. induced across the terminals of the switch.

Answers on p.216

28 Alternating currents

Characteristics of alternating currents

Terminology

Revised

Up to this point we have only looked at direct currents, which have been considered as steady unchanging currents. An alternating current changes direction continuously — the charge carriers vibrate backwards and forwards in the circuit (Figure 28.1).

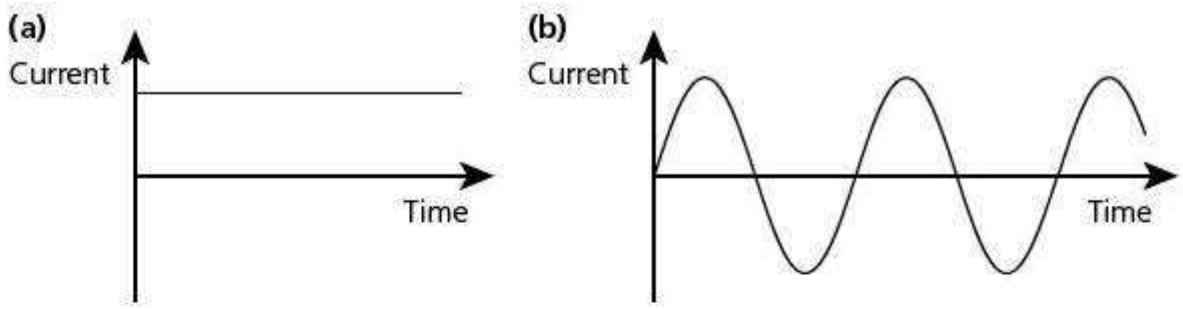

Figure 28.1 (a) A direct current from a battery, (b) An alternating current from a simple generator

The terminology used in this section is similar to that used in the work on oscillations.

- The **frequency** (f) of the signal is the number of complete oscillations of the signal per unit time.
- The **period** (T) is the time taken for one complete oscillation of the signal.
- The **peak current** (I_0) is equal to the maximum current during the cycle.

This type of current is driven by an alternating voltage with a similar shaped curve. You should recognise the shape of the curve from the work you have done on oscillations in Topic 19. The equations for these curves are as follows:

- for the current $I = I_0 \sin \omega t$
- for the voltage $V = V_0 \sin \omega t$

where I_0 is the peak current, V_0 is the peak voltage, and ω is the angular frequency of the signal ($= 2\pi f$).

Expert tip

Any current that changes direction continuously is described as an alternating current. In this course you need only concern yourself with sinusoidal alternating currents.

Power dissipated by an alternating current

Revised

Just as the current is changing continuously, the power dissipated is changing continuously.

In Figure 28.2 an a.c. supply is driving a current I, which is equal to $I_0 \sin \omega t$, through a resistor of resistance R.

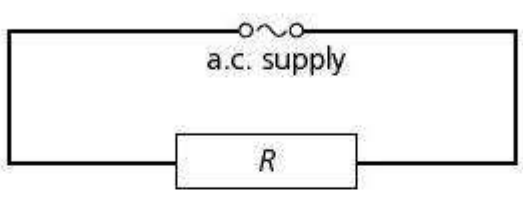

Figure 28.2

The power P dissipated by the alternating current in the resistor is:

$$P = I^2R$$

$$P = (I_0 \sin \omega t)^2 R$$

$$P = I_0^2 R \sin^2 \omega t$$

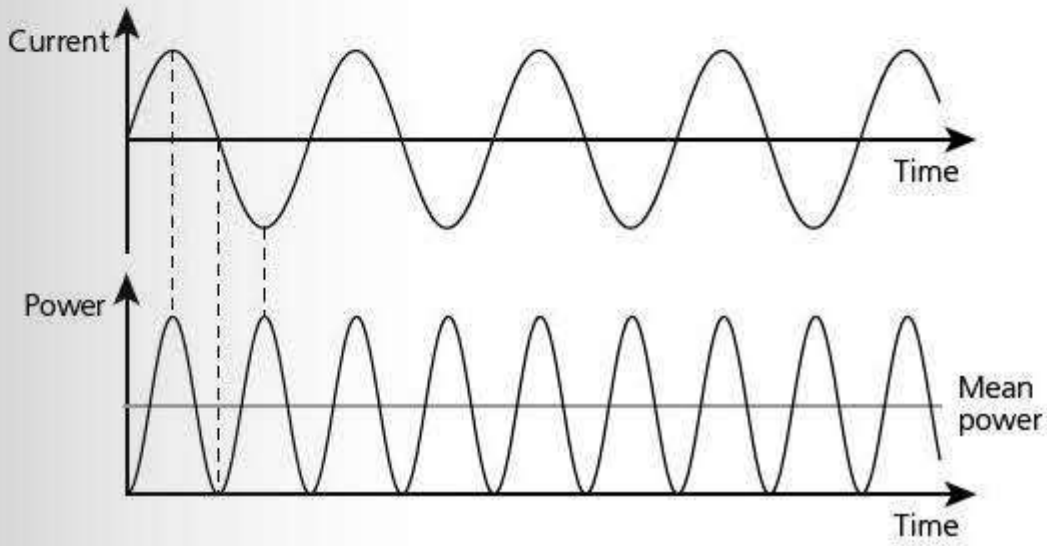

Figure 28.3 Graphs of (a) the alternating current through a resistor and (b) the power dissipated in the resistor

Study the power curve in Figure 28.3 — it is always positive. Even though the current goes negative, power is equal to current squared, and the square of a negative number is positive.

The average power dissipated over a complete cycle is equal to half the peak power during that cycle (the horizontal grey line on the graph).

$$P_{average} = \tfrac{1}{2}P_0 = \tfrac{1}{2}I_0^2R$$

The direct current that would dissipate this power = $\sqrt{\frac{1}{2}I_0^2}$

$$I_{d.c.} = \frac{I_0}{\sqrt{2}}$$

This current is known as the **root mean square current**.

$$I_{r.m.s.} = \frac{I_0}{\sqrt{2}}$$

Similarly, the r.m.s. voltage is given by:

$$V_{r.m.s.} = \frac{V_0}{\sqrt{2}}$$

The **r.m.s. value** of the current (or voltage) is the value of direct current (or voltage) that would convert energy at the same rate in a resistor.

Worked example

(a) Explain what is meant by the statement that a mains voltage is rated at 230 V, 50 Hz. Calculate the peak voltage.

(b) Calculate the energy dissipated when an electric fire of resistance 25 Ω is run from the supply for 1 hour.

Answer

(a) 230 V tells us that the r.m.s. voltage is 230 volts. The frequency of the mains supply is 50 Hz.

$$V_0 = V_{r.m.s.} \times \sqrt{2} = 230 \times \sqrt{2} = 325\ \text{V}$$

(b) $\text{energy} = \frac{V_{r.m.s.}^2 t}{R} = \frac{230^2 \times 60 \times 60}{25} = 7.6 \times 10^6\ \text{J}$

Revision activity

- Ensure that you are fully aware that in this type of problem it is the r.m.s voltage that is used, not the peak voltage.

The transformer

The principle of a simple transformer

Revised

Transformers (Figure 28.4) are used to step voltages up (e.g. for the accelerating voltages in a cathode-ray tube) or down (e.g. for an electric train set).

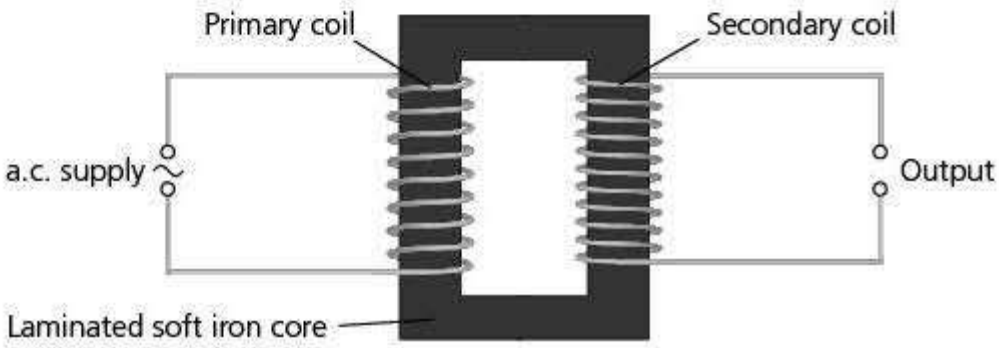

Figure 28.4 A transformer

A transformer works on the following principles:

- The alternating current in the primary coil produces an alternating magnetic flux in the soft iron former.
- The soft iron core strengthens the magnetic field produced by the current in the primary coil.
- The alternating flux in the transformer is transmitted round the core and cuts the secondary coil.
- The changing magnetic flux in the secondary coil induces an alternating e.m.f. across the ends of the secondary coil.

In an ideal transformer, when no current is taken from it:

$$\frac{V_s}{V_p} = \frac{N_s}{N_p}$$

where V_s is the e.m.f induced across the secondary coil, V_p is the voltage across the primary coil, N_s is the number of turns in the secondary coil and N_p is the number of turns in the primary coil.

You can see from this that in a step-up transformer the primary coil will have only a few turns, while the secondary coil will have many turns. The reverse is true for a step-down transformer.

Worked example

An electric train set is designed to operate at 12 V a.c.

Calculate the turns ratio for a transformer that would be suitable to step down a mains voltage of 230 V.

Answer

$$\frac{V_s}{V_p} = \frac{N_s}{N_p} = \frac{12}{230} = 1:19$$

Power output from a transformer

Revised

In an ideal transformer the power output would equal the power input. Substituting for power:

$$V_s I_s = V_p I_p$$

Worked example

A 12 V, 96 W heater is run from a transformer connected to the 230 V mains supply.

Assuming that there are no energy losses in the transformer, calculate:

(a) the current in the heater

(b) the current input to the transformer

Answer

(a) $P = V_s I_s$

$$I_s = \frac{P}{V_s} = \frac{96}{12} = 8.0\,\text{A}$$

(b) $V_s I_s = V_p I_p$

$12 \times 8 = 230 \times I_p$

Therefore:

$$I_p = 12 \times \frac{8}{230} = 0.42\,\text{A}$$

Real transformers

Revised

In practice, transformers, although they can be designed to have efficiencies in excess of 99%, are never 100% efficient. Energy losses come from:

- work done in overcoming the resistance of the coils; the coils are usually made of copper and hence these energy losses are known as copper losses
- the induction of currents in the iron former (known as eddy currents); these energy losses are known as iron losses
- work done in the formation of magnetic fields in the iron core; these energy losses are known as hysteresis losses

The energy losses due to the resistance of the coils are kept to a minimum by making the coils out of a good conductor, such as copper.

In a step-up transformer the input current is large, so the few turns required are made from thick wire. The secondary coil, which carries only a small current, is made from much thinner wire.

The iron losses are reduced by laminating the core. This means making it out of thin iron plates, each plate being insulated from its neighbours by a thin layer of varnish. This reduces the size of the eddy currents induced.

Hysteresis losses are reduced by making the core from pure iron, which is easily magnetised and demagnetised, rather than from steel, which requires much more work to magnetise and demagnetise.

Transmission of electrical energy

Advantages of alternating current and high voltage

Revised

Electrical energy is transferred from power stations across many kilometres of power lines to local communities. Although the cables are thick and made from metals of low electrical resistance, energy is still dissipated in them.

The energy dissipated in the cable is I^2R where R is the resistance of the cable.

The smaller the current, the less energy is wasted in the cable. Indeed, if the current is halved then the power loss is reduced by a factor of four. Consequently, energy is transmitted at high voltage–low current and is then

stepped down before being distributed to the consumer. Alternating currents are used for transmitting electrical energy because the alternating voltages can be stepped up and down with much less energy loss than direct voltages.

Worked example

Figure 28.5 shows a demonstration that a teacher does to show energy loss in a transmission line.

The two resistance wires have a total resistance of 2.0 Ω. The lamp is designed to run at 12.0 V and to transfer energy at the rate of 36 W.

(a) Calculate the resistance of the lamp and the total resistance in the circuit. (Assume that the resistance of the lamp does not change with temperature.)

(b) Calculate the current in the circuit.

(c) Calculate the drop in potential across the resistance wires.

(d) Calculate the power loss in the resistance wires and the power dissipated in the lamp.

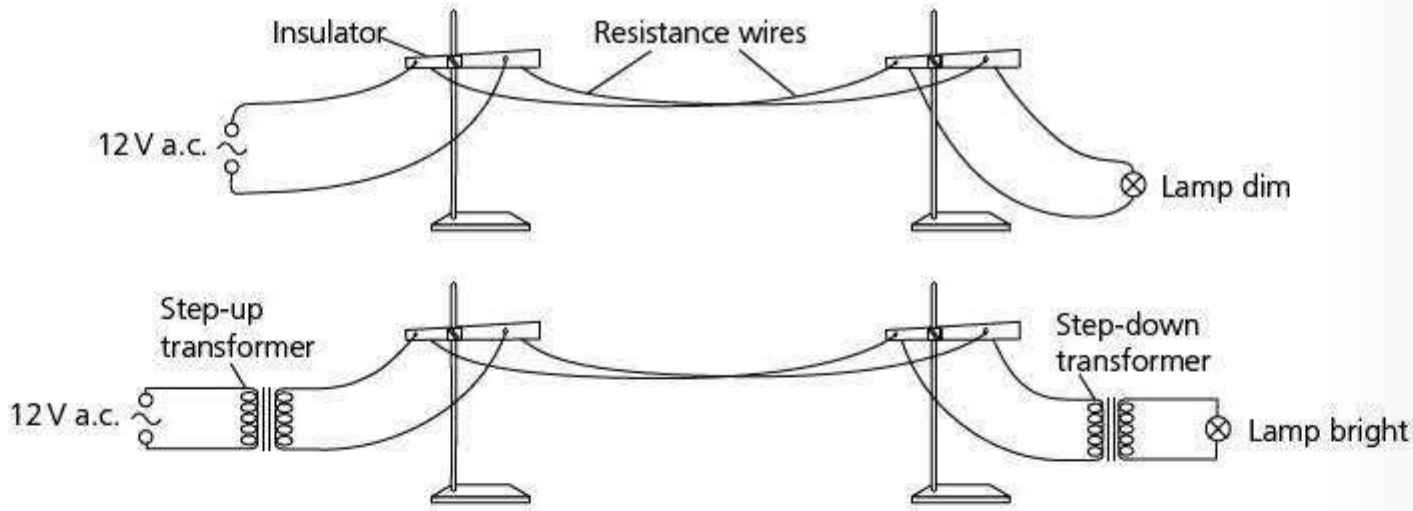

Figure 28.5 A model transmission line

Answer

(a) $P = \frac{V^2}{R} = \frac{12^2}{36} = 4.0\,\Omega$

total resistance in the circuit = 2.0 + 4.0 = 6.0 Ω

(b) $I = \frac{V}{R} = \frac{12}{6} = 2.0\,\text{A}$

(c) potential drop across the wires = resistance of the wires × current through them = 2.0 × 2.0 = 4.0 V

(d) power dissipated in the wires = potential drop across wires × current = 4.0 × 2.0 = 8.0 W

power dissipated in the lamp = potential drop across lamp × current = (12.0 − 4.0) × 2.0 = 16.0 W

Expert tip

In this example you can see that one-third of the total potential drop is across the wires and consequently one-third of the power is dissipated in the wires. The lamp lights only dimly and much energy is wasted. If the voltage is stepped up before being transmitted, as in the second diagram, a much smaller current is needed to transmit the same power. Consequently the potential drop across the wires (and the power dissipated in them) is much less. The voltage is then stepped down to 12.0 V once more before being fed to the lamp, which now lights brightly.

Rectification

Half-wave rectification

Revised

Although it is advantageous to transmit power using alternating currents, many electrical appliances require a direct current. The simplest way to convert an alternating supply to a direct supply is to use a single diode (Figure 28.6).

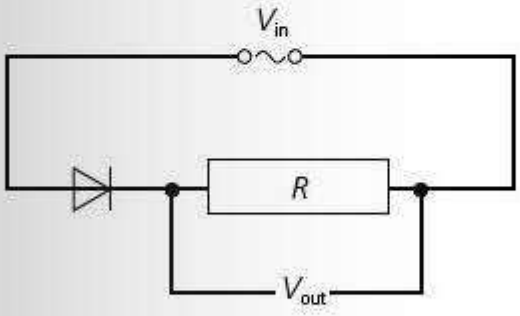

Figure 28.6 Use of a diode as a rectifier

The diode allows a current to pass only one way through it. The current through the resistor causes a potential drop across it when the diode conducts. When the input voltage is in the opposite direction, there is no current through the resistor, so the potential difference across it is zero. This is known as **half-wave rectification** (Figure 28.7).]

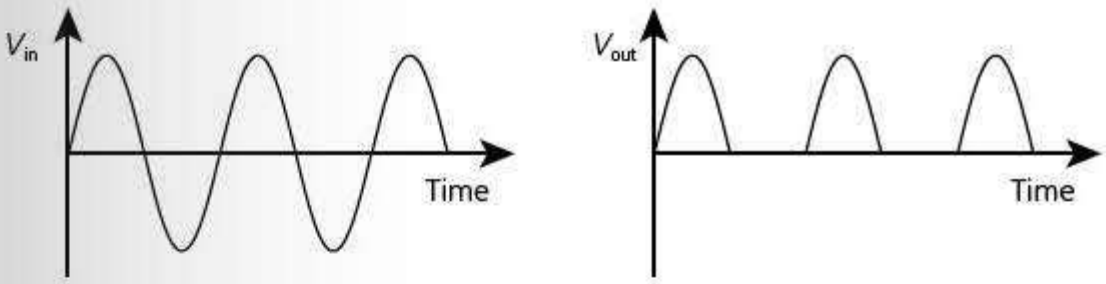

Figure 28.7 Graph showing half-wave rectification

Full-wave rectification

Revised

With half-wave rectification there is a current for only half a cycle. To achieve full-wave rectification, a diode bridge is used (Figure 28.8).

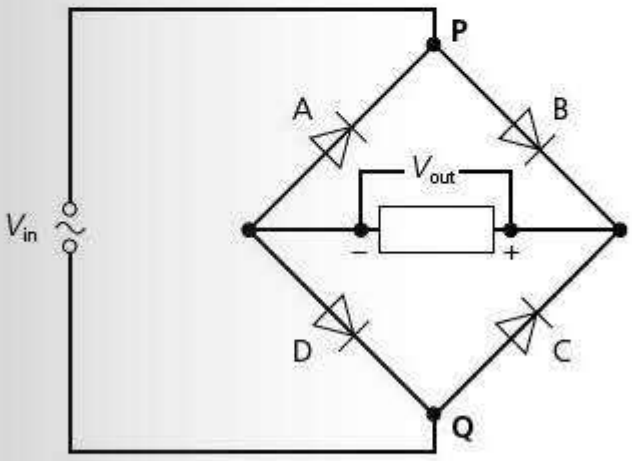

Figure 28.8 Diode bridge for full-wave rectification

You can see that when point **P** is positive with respect to **Q**, then a current will pass from **P** through diode B, through the resistor, then through diode D to point **Q**. When point **P** is negative with respect to **Q**, then the current will pass from **Q** through diode C, through the resistor, and through diode A to point P.

In both cases the current is in the same direction through the resistor, so the potential difference across it is always in the same direction. There is a full-wave rectified output voltage, as shown in Figure 28.9.

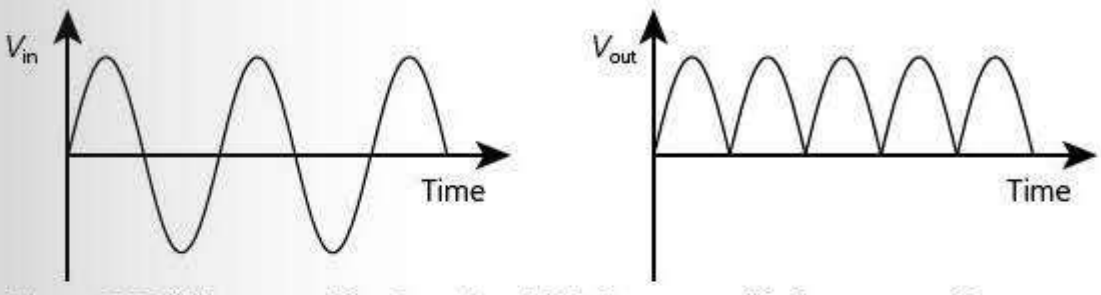

Figure 28.9 (a) Input e.m.f. against time (b) Full-wave rectified output e.m.f.

Revision activity

- Copy out Figure 28.8 twice. On the first copy consider point **P** to be positive and point **Q** to be negative. Draw arrows to show the currents in the diodes and through the resistor. On the second copy repeat the exercise but this time consider point **P** to be negative and point **Q** to be positive. Draw arrows to show the currents in the diodes and through the resistor.

  Note that the current (and hence the potential difference) across the resistor is in the same direction in both cases.

The output from a full-wave rectifier is still rough, rising from zero to a maximum and back to zero every half cycle of the original alternating input. Many devices, such as battery chargers, require a smoother direct current for effective operation. To achieve this, a capacitor is connected across the output resistor (Figure 28.10).

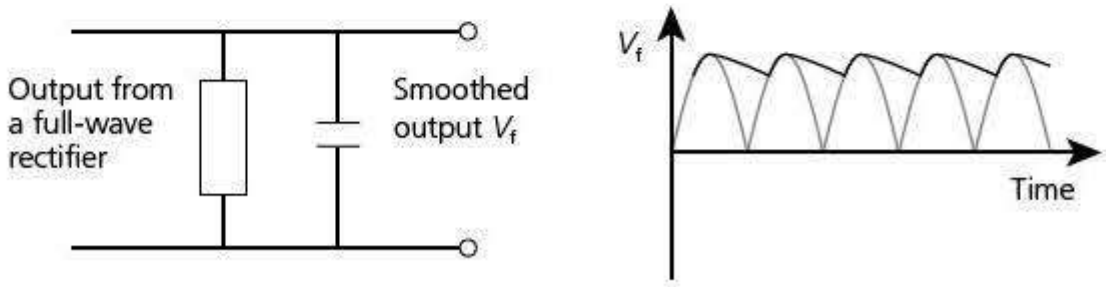

Figure 28.10 Smoothing circuit and the smoothed output produced by using a single capacitor

Because the capacitor takes some time to discharge, it will only partially discharge in the time it takes for the potential difference to rise once more. The value of the product *CR* (where *C* is the capacitance of the capacitor and *R* is the load resistance) should be much greater than the time period of the original alternating input. This means that the capacitor does not have sufficient time to discharge significantly.

The time constant of a circuit

Revised

The unit of capacitance is the farad; the unit of resistance is the ohm.

$F = CV^{-1} = AsV^{-1}$ and $\Omega = VA^{-1}$

So the units of *CR* are:

$F\Omega = AsV^{-1} \times VA^{-1} = s$

The product *CR* is called the **time constant** of a capacitor–resistor circuit.

You will meet something similar to this when you study the decay of a radioactive isotope. You can see that increasing either the resistance or the capacitance will decrease the 'ripple' on the output voltage.

The **time constant** is the time taken for the charge to fall to $\frac{1}{e}$ of the original charge (where e = 2.7182…).

Revision activity

- Add the following equations to your must-learn list:

$I = I_0 \sin \omega t$

$V = V_0 \sin \omega t$

$I_{r.m.s.} = \frac{I_0}{\sqrt{2}}$

$V_{r.m.s.} = \frac{I_0}{\sqrt{2}}$

$\frac{V_s}{V_p} = \frac{N_s}{N_p}$

Now test yourself

Tested

1 Calculate the r.m.s. current when the peak current is 2.4 A.
2 Calculate the peak voltage when the r.m.s. voltage is 48 V.
3 In an a.c. circuit the peak potential difference across a resistor is 20 V and the peak current is 3 A. Calculate the power dissipated in the resistor.
4 An ideal transformer has 50 turns in the primary coil and 2000 turns in the secondary coil. The input voltage is 25 V. Calculate the output voltage.
5 The input current to the transformer in question 4 is 12 A. Assuming the transformer is 100% efficient, calculate the output current.
6 The capacitance in a smoothing circuit is 2000 μF and the resistance is 150 Ω. Calculate the time constant.

Answers on p.216

29 Quantum physics

Energy of a photon

Waves or particles?

Revised

In Topic 9 you learned that light shows the properties of waves — in particular, diffraction and interference. In this section we investigate properties of light that suggest that it also behaves like particles. You will also learn that electrons show wave properties.

Photoelectric effect

Revised

The photoelectric effect is demonstrated using a gold-leaf electroscope (Figure 29.1). The electroscope is charged negatively. When visible light is shone onto the zinc plate the electroscope remains charged no matter how bright the light. When ultraviolet light is shone onto the plate, it discharges steadily; the brighter the light the faster it discharges. Ultraviolet light has enough energy to lift electrons out of the plate and for them to leak away into the atmosphere; visible light does not have sufficient energy.

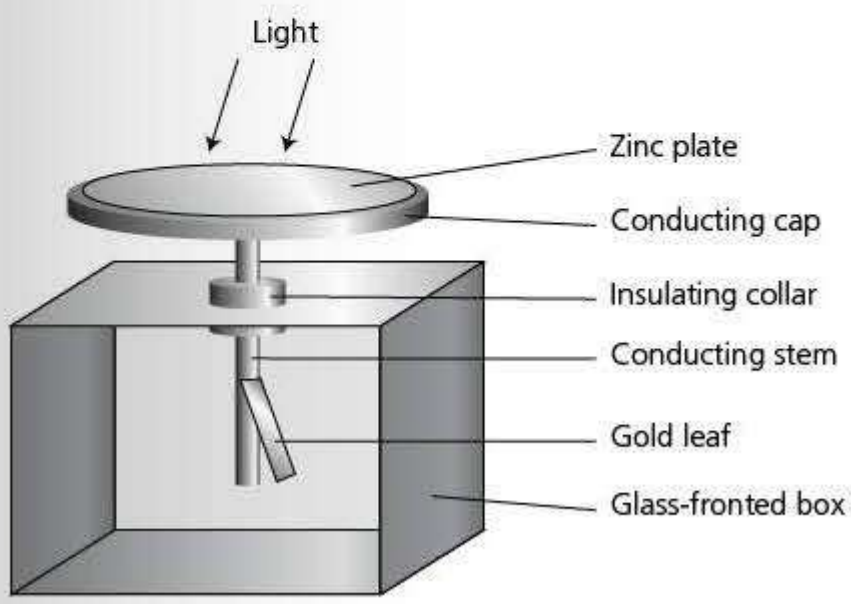

Figure 29.1

This cannot be explained in terms of a wave model. If light is transferred by waves, eventually, whatever the frequency, enough energy would arrive and electrons would escape from the metal surface. In practice, provided the radiation has a high enough frequency, electrons are emitted instantaneously. Electromagnetic radiation arrives in packets of energy — the higher the frequency, the larger the packet. These packets of energy, or **quanta**, are called **photons**. The emission of photoelectrons occurs when a single photon interacts with an electron in the metal — hence the instantaneous emission of the photoelectron. The packets of energy for visible light are too small to eject electrons from the zinc plate; the ultraviolet packets are large enough to do so.

More on the photoelectric effect

More detailed experiments measuring the maximum energy of electrons emitted in the photoelectric effect (photoelectrons) give evidence for the

relationship between photon energy and frequency. They also show that the intensity of the electromagnetic radiation does not affect the maximum energy with which the electrons are emitted, just the rate at which they are emitted.

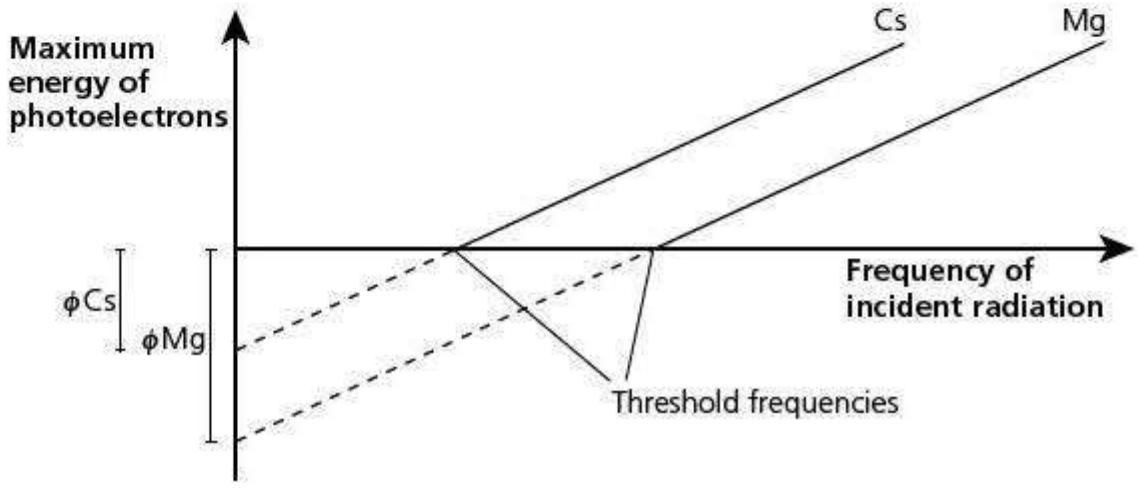

Figure 29.2 Graph of maximum energy of photoelectrons against frequency of incident radiation

Figure 29.2 gives a great deal of information:

- The graphs are straight lines with the same gradient, whatever metals are used.
- The **threshold frequency** for any metal is unique to that particular metal.
- The quantity ϕ in the diagram is called the **work function**. This is dependent on the threshold frequency and is, therefore, different for each metal.

The **threshold frequency** is the minimum-frequency radiation that is required to release electrons from the surface of a metal.

The **work function** is the minimum energy, or minimum work, needed to remove an electron from the surface of a metal.

The general equation for straight-line graphs is:

$$y = mx + c$$

In this case:

$$\boldsymbol{E = hf - \phi}$$

The gradient is the same for all metals, so h is universal. It is known as the **Planck constant** $= 6.63 \times 10^{-34}$ J s.

If you study the graph in Figure 29.2 you will see that the quantity hf is the energy of the incoming photons. So:

photon energy $\boldsymbol{E = hf}$

This equation, sometimes known as the Einstein–Planck equation, combines the wave nature (frequency) and the particle nature (energy of a photon) in the same equation. The equation also shows that the maximum energy of a photoelectron is independent of the intensity of the radiation and depends solely on the frequency of the radiation. Higher intensity means a faster rate of arrival of photons, but the energy of each photon is still the same.

Worked example

The wavelength of red light is approximately 7×10^{-7} m. Calculate the energy of a red light photon.

Answer

$$E = hf = -\frac{hc}{\lambda} = -\frac{6.63 \times 10^{-34} \times 3 \times 10^{8}}{7 \times 10^{-7}} = 2.8 \times 10^{-19}$$

Expert tip

The alternative way of expressing the energy of a photon, $E = \frac{hc}{\lambda}$, is derived from $E = hf$ and $f\lambda = c$. It is a useful expression to remember.

When photoelectrons are ejected from the surface of a metal, the 'spare' energy of the photon (the energy that is not used in doing work to lift the electron out of the metal) is given to the electron as kinetic energy. When light is incident on the metal surface, electrons are emitted with a range of kinetic energies, depending on how 'close' they were to the surface when the photons were

incident upon them. The maximum kinetic energy is when the minimum work is done in lifting the electron from the surface, consequently:

$$hf = \phi + \tfrac{1}{2}mv^2_{max}$$

It follows that $hf_0 = \phi$, where f_0 is the threshold frequency of the radiation.

Worked example

The work function energy of caesium is 2.1 eV.

(a) Calculate the threshold frequency for this metal.

(b) State in what range of the electromagnetic spectrum this radiation occurs.

(c) Radiation of frequency 9.0×10^{14} Hz falls on a caesium plate. Calculate the maximum speed at which a photoelectron can be emitted. (mass of an electron = 9.1×10^{-31} kg; charge on an electron = 1.6×10^{-19} C)

Answer

(a) $\phi = 2.1 \times 1.6 \times 10^{-19} = 3.36 \times 10^{-19}$ J

$E = hf$

$$f = \frac{E}{h} = \frac{3.36 \times 10^{-19}}{6.63 \times 10^{-34}} = 5.1 \times 10^{14}\ \text{Hz}$$

(b) It is in the visible spectrum, in the yellow region.

(c) Energy of the photon:

$E = hf = 6.63 \times 10^{-34} \times 9.0 \times 10^{14} = 5.97 \times 10^{-19}$ J

$hf = \phi + E_k$

$E_k = hf - \phi = 5.97 \times 10^{-19} - 3.36 \times 10^{-19} = 2.61 \times 10^{-19}$ J

$E_k = \tfrac{1}{2}mv^2$

$$v = \sqrt{\frac{2E_k}{m}} = \sqrt{\frac{2 \times 2.61 \times 10^{-19}}{9.1 \times 10^{-31}}} = 7.6 \times 10^5\ \text{m s}^{-1}$$

Energy levels in atoms and line spectra

Line emission spectra

Revised

The visible spectrum of a hot body is a continuous band of light with one colour merging gradually into the next. Such a spectrum is called a continuous spectrum (Figure 29.3a). If a large potential difference is put across low-pressure gases they emit a quite different spectrum, consisting of a series of bright lines on a dark background. This type of spectrum is called a **line emission spectrum** (Figure 29.3b).

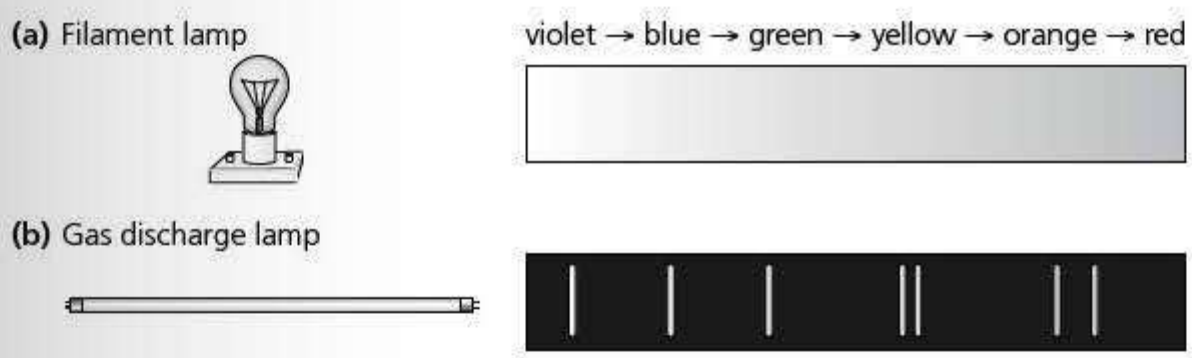

Figure 29.3 (a) Continuous spectrum from a hot filament lamp, (b) Line emission spectrum from a gas-discharge tube

The precise lines visible depend on the gas in the discharge tube; each gas has its own unique set of lines. This is useful for identifying the gases present, not only in Earth-based systems but in stars as well. Each line has a particular frequency. Hence each photon from a particular line has the same energy.

Atoms in gases are relatively far apart from each other and have little influence on each other. The electrons in each atom can only exist in specific energy states. Exciting the gas means that electrons are given energy to move from a low energy state (the ground state) to a higher energy state. They will remain in that state for a time before dropping back to a lower state. When they do so they emit a photon.

Figure 29.4 shows the energy levels for a hydrogen atom and an electron falling from level $n = 3$ to $n = 1$.

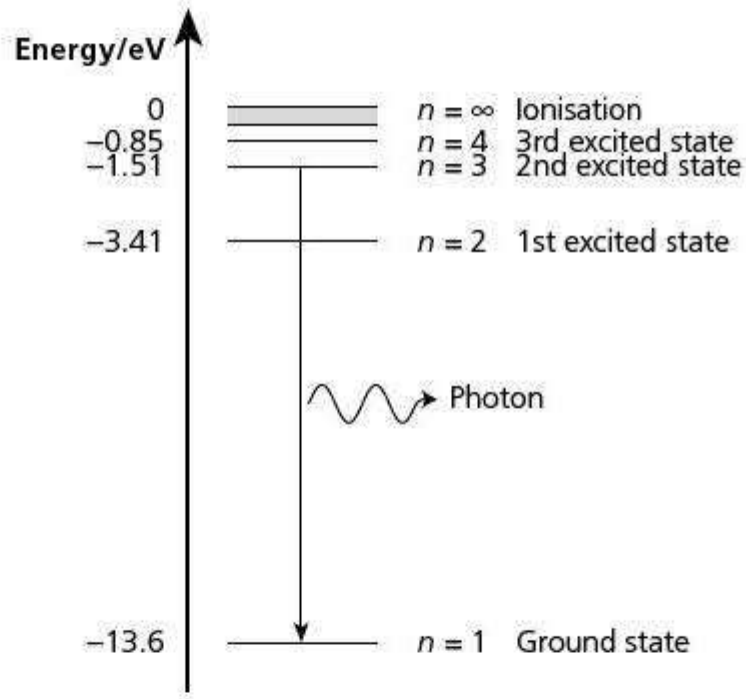

Figure 29.4

In general, the frequency of the emitted photon when an electron drops from a level E_1 to a level E_2 can be calculated from the equation:

$$hf = E_1 - E_2$$

Worked example

Calculate the frequency of the photon emitted when the hydrogen atom falls from the second excited state to the ground state.

Answer

$E = hf$

E = the difference in the energy levels = $-1.51 - (-13.6) \approx 12.1\,\text{eV}$

$E = 12.1 \times 1.6 \times 10^{-19} = 19.4 \times 10^{-19}\,\text{J}$

$$f = \frac{E}{h} = -\frac{1.94 \times 10^{-19}}{6.63 \times 10^{-34}} = 2.9 \times 10^{15}\,\text{Hz}$$

This is in the ultraviolet part of the spectrum.

Expert tip

When an electron is totally removed from the nucleus the ionisation level is zero and the other energies are all negative. Compare this with the potential energies near a charged sphere.

Line emission spectra give strong evidence for the existence of discrete energy levels in atoms. The photons emitted are of a definite set of frequencies and therefore of a definite set of energies. Each specific energy photon corresponds to the same fall in energy of an orbital electron as it drops from one discrete energy level to a second, lower, discrete energy level.

Line absorption spectra

Revised

When white light from a continuous spectrum is shone through a gas or vapour the spectrum observed is similar to a continuous spectrum, except that it is crossed by a series of dark lines (Figure 29.5).

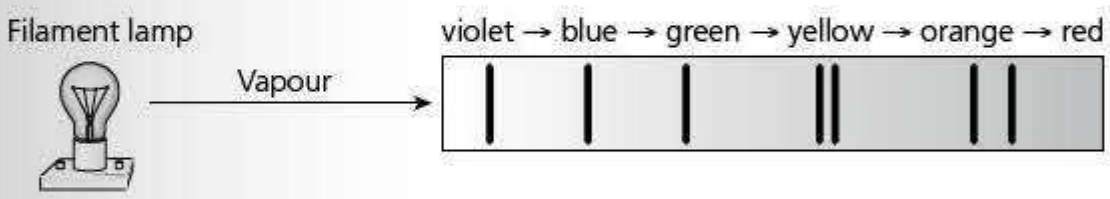

Figure 29.5 A line absorption spectrum

This type of spectrum is called a **line absorption spectrum**. White light consists of all colours of the spectrum, which is a whole range of different frequencies and therefore photon energies. As the light goes through the gas/vapour the photons of energy exactly equal to the differences between energy levels are absorbed, as shown in Figure 29.6.

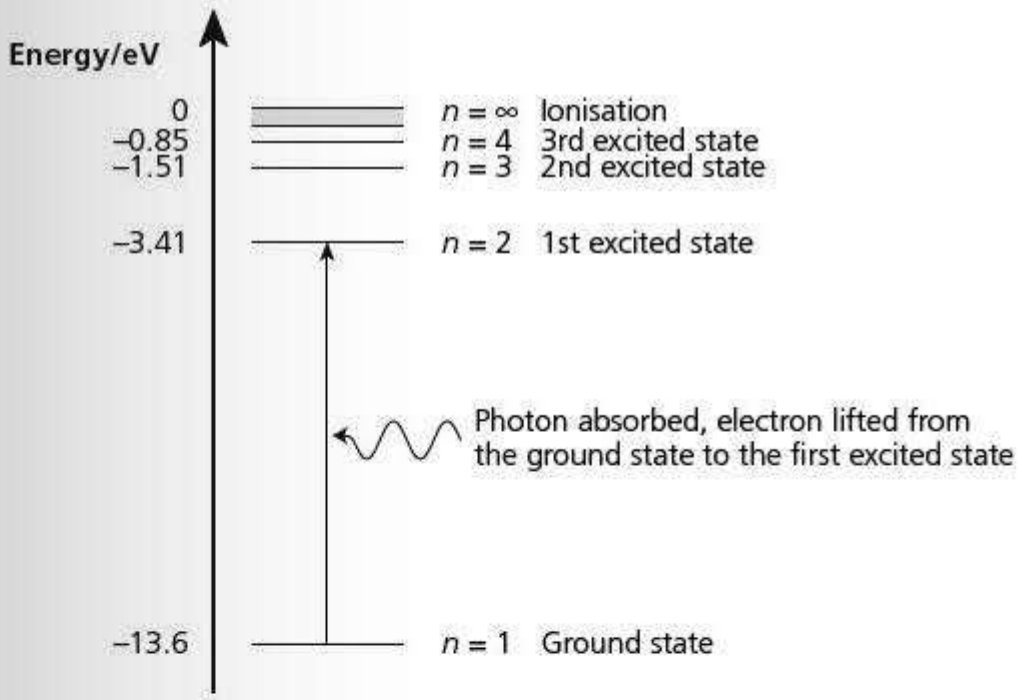

Figure 29.6 Energy level diagram showing absorption of a photon, which excites an electron into a higher energy level

The light is then re-emitted by the newly excited atom. However, this secondary photon can be emitted in any direction, so the energy of this frequency radiated towards the observer is very small. Hence dark lines are observed in the spectrum.

Worked example

The line absorption spectrum from a star is studied. A dark line is observed at a wavelength of 6.54×10^{-7} m. Calculate the difference in the two energy levels that produces this line.

Answer

$$E = hf = \frac{hc}{\lambda} = \frac{6.63 \times 10^{-34} \times 3 \times 10^{8}}{6.54 \times 10^{-7}} = 3.04 \times 10^{-19}\,\text{J}$$

Expert tip

If the answer to the worked example is converted to electronvolts, it becomes 1.90 eV. This is the difference between the first ($n = 2$) and second ($n = 3$) excited levels in the hydrogen atom. This reaction is quite likely — the outer atmosphere of the star, although cooler than the core, is still at a high temperature, so a lot of atoms will be in the first, and other, excited states. This provides evidence that the outer atmosphere of the star contains hydrogen, although more lines would need to be observed for this to be confirmed.

Wave–particle duality

Electrons

Revised

'If light can behave like waves and like particles, can electrons behave like waves?'

That was the thought, in the 1920s, of a postgraduate student, **Louis de Broglie**, who first proposed the idea of 'matter waves'. If electrons do travel through space as waves, then they should show diffraction effects.

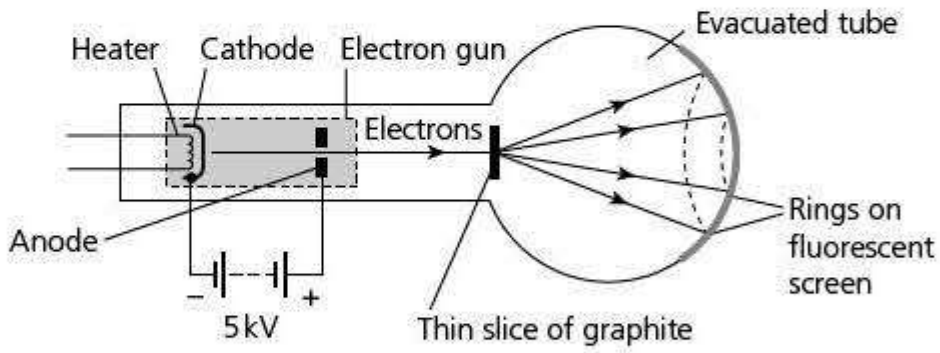

Figure 29.7 Apparatus to demonstrate electron diffraction

In the experiment in Figure 29.7, electrons are emitted from the hot cathode and accelerated towards the thin slice of graphite. The graphite causes diffraction and the maxima are seen as bright rings on the fluorescent screen. The diameter of the rings is a measure of the angle at which the maxima are formed. The diameters are dependent on the speed to which the electrons are accelerated. The faster the speed the smaller the diameter, and hence the smaller the diffraction angle. From this information it can be concluded that:

- electrons travel like waves
- the wavelength of those waves is similar to the spacing of the atoms in graphite (otherwise diffraction would not be observed)
- the wavelength of the waves decreases with increasing speed of the electrons

The de Broglie equation

Revised

It was proposed by de Broglie that the wavelength associated with electrons of mass m travelling at a velocity v could be given from the formula:

$$\lambda = \frac{h}{mv}$$

You will recall that the quantity mv is the momentum p. The equation can be rewritten as:

$$\lambda = \frac{h}{p}$$

Expert tip

The latter form of the equation is the more significant. This is because all matter has an associated wave function and it is the momentum, rather than the speed, that is the determining factor of the wavelength.

Worked example

Electrons accelerated through a potential difference of 4.0 kV are incident on a thin slice of graphite that has planes of atoms 3.0×10^{-10} m apart.

Show that the electrons would be suitable for investigating the structure of graphite. (mass of an electron = 9.1×10^{-31} kg)

Answer

energy of the electrons = 4.0 keV = $4.0 \times 10^3 \times 1.6 \times 10^{-19} = 6.4 \times 10^{-16}$ J

$E_k = \frac{1}{2}mv^2$

$$v = \sqrt{\frac{2E_k}{m}} = \sqrt{\frac{2 \times 6.4 \times 10^{-16}}{9.1 \times 10^{-31}}} = 3.8 \times 10^7 \text{ m s}^{-1}$$

$$\lambda = \frac{h}{mv} = \frac{6.63 \times 10^{-34}}{9.1 \times 10^{-31} \times 3.8 \times 10^7} = 1.9 \times 10^{-11} \text{ m}$$

The waves are of a similar order of magnitude to the atomic layers of graphite and are therefore suitable for investigating the structure of graphite.

Other matter waves

It is not just electrons that have an associated wave function; all matter does. Neutron diffraction is an important tool in the investigation of crystal structures because neutrons are uncharged. From the de Broglie equation, you can see that, for the same speed, neutrons will have a much shorter wavelength than electrons because their mass is much larger. Consequently, slow neutrons are used when investigating at the atomic level.

What about people-sized waves? Consider a golf ball of approximate mass 50 g being putted across a green at 3 m s^{-1}. Its wavelength can be calculated:

$$\lambda = \frac{h}{mv} = \frac{6.63 \times 10^{-34}}{0.05 \times 3} = 4.4 \times 10^{-33}$$

This is not even 1 trillionth the diameter of an atomic nucleus! Consequently, we do not observe the wave function associated with everyday-sized objects.

Band theory

Conduction theory

Revised

You have already met the idea that atoms are quantised, with the electrons allowed in only fixed energy levels (or shells/subshells). To move from a lower to a higher energy level an electron must absorb energy, the amount being dependent on the difference between the energy levels. This refers to a single isolated atom (an atom in a gas). Figure 29.8 explains what happens when atoms are not isolated. For a single isolated atom, such as in a gas, a large gap between energy levels means a large amount of energy is needed to lift an electron from the lower level to the higher level (Figure 29.8a). For two atoms close together, the energy levels from each atom form a pair of sub-levels (Figure 29.8b). With three atoms close together each energy level forms three sub-levels very close together (Figure 29.8c). When many atoms are close together, as in a solid crystal, bands of energy levels form with many sub-levels, with infinitesimal steps between each sub-level. The steps are so small that they can be considered to be continuous and the gap between the bands is further reduced (Figure 29.8d).

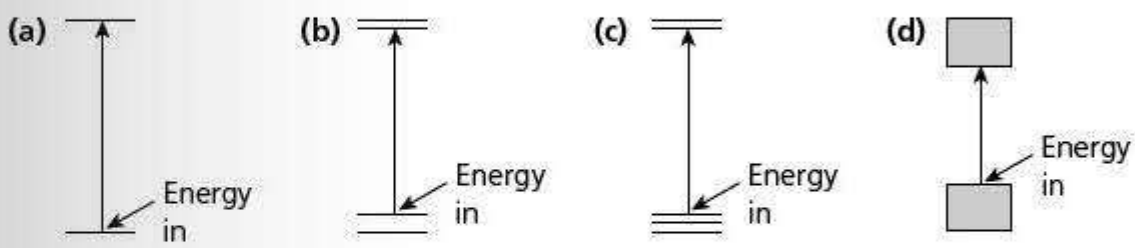

Figure 29.8

The lower band is known as the **valence band** and the upper band as the **conduction band**. The sub-levels within each band are very close together and once an electron is excited into the conduction band it is able to hop from one sub-level to another. If a potential difference is applied across the material the electron can move through the material. The energy gap between the band, known as the **forbidden band** or **band gap**, determines not only how well the material conducts, but also the conduction processes.

There are three scenarios:

1. The valence and conduction bands overlap (Figure 29.9a). This is typical of metallic resistors. Electrons can move into any energy level within the combined conduction and valence bands and can move freely through the material. These are the delocalised electrons found in metals. The material is a good conductor, often known as a metallic conductor.
2. The band gap ΔE is so large that very few or no electrons are able to jump from the valence band to the conduction band (Figure 29.9b). Hence there are few delocalised electrons to carry the charge. The material is an insulator.
3. The band gap ΔE is sufficiently small that a small number of electrons are excited (by thermal vibrations) and cross the forbidden band (Figure 29.9c). Once in the conduction band these electrons can move through the material and hence some conduction occurs. The materials conduct but not as well as the metallic conductors. This is typical of a class of materials known as **semiconductors**.

The **valence band** is the range of energy levels in which valence electrons are situated when in their lowest energy state.

The **conduction band** is the range of energy levels into which electrons are excited and in which they are free to move around the material.

The **forbidden band** or **band gap** is the energy gap between the valence and conduction bands, in which electrons cannot exist.

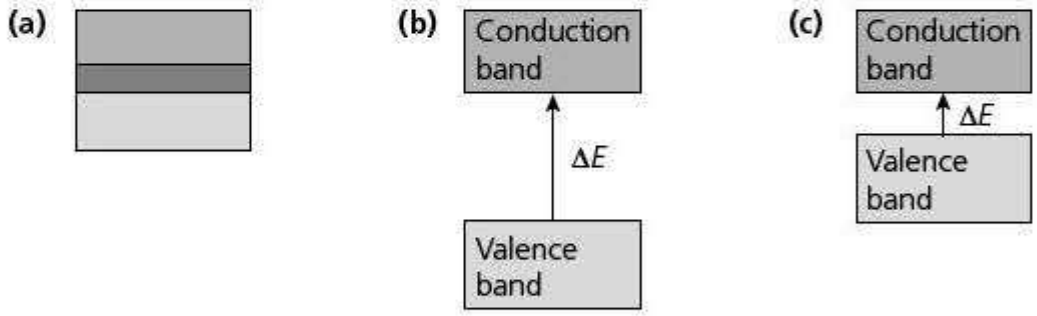

Figure 29.9

Examples of semiconductors are the elements silicon and germanium, although compounds such as gallium arsenide are used increasingly.

Semiconductors are materials whose resistivity is between that of insulators and metallic conductors. They differ from conductors, not only in their higher resistance but also in the conduction process.

Conduction in semiconductors

Revised

When an electron jumps from the valence band to the conduction band, it leaves a vacancy in the valence band (Figure 29.10).

Figure 29.10 An electron jumps from the valence band to the conduction band, leaving a positive hole in the valence band

Figure 29.11 shows a model of the typical semiconductor, silicon, across which a potential difference is applied. Around each silicon atom there are four valence electrons. When an electron is excited into the conduction band and becomes a delocalised electron, it leaves a vacancy. The delocalised electron will move towards the positive potential as in metallic conduction. The vacancy is filled by an electron jumping from an adjacent atom, attracted by the positive potential. A new vacancy is created, which in turn is filled in a similar manner. The result is that the vacancy moves towards the negative potential, just like a positive particle. The amazing thing is that this vacancy behaves exactly like a positive particle and is called a **positive hole**.

A **positive hole** is the vacancy left in the valence band when an electron is excited into the conduction band.

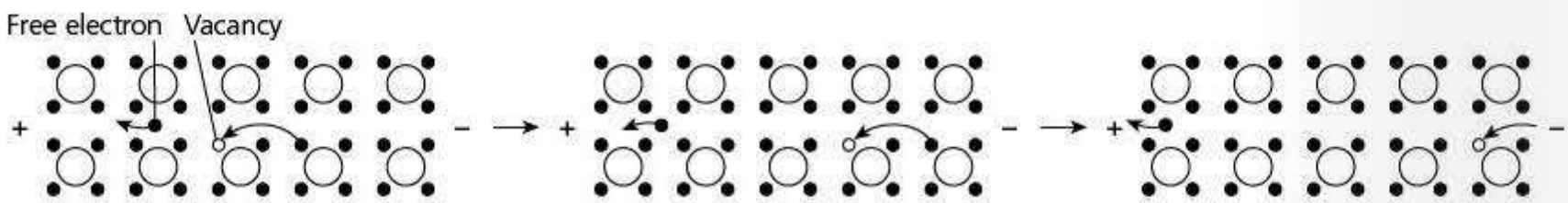

Figure 29.11 Model of conduction in a semiconductor

It can be seen that in semiconductors there are two types of charge carrier: electrons and positive holes.

The effect of temperature on conduction

Revised

Metals

The valence and conduction bands overlap, so only very small energy quanta are needed to enable the delocalised electrons to move from one of the many energy levels within these bands to another, and virtually all the valence electrons are able to enter the conduction band and carry charge. Increasing the temperature causes the ions to vibrate more, making it more difficult for the electrons to move through the crystal lattice and increasing the resistance of the metal.

Semiconductors

The main factor that limits the conductivity in a semiconductor is the small number of electrons that can cross the forbidden band and hence participate in the conduction process (fewer than one in a million). An increase in temperature means that more electrons have sufficient energy to cross the forbidden band, increasing the number of charge carriers and reducing the resistance of the material.

Expert tip

At absolute zero (0 K) all semiconductors (and insulators) act as perfect insulators, because there is no available energy to excite electrons up into the conduction band.

Insulators

There is no such thing as a perfect insulator at room temperature — the occasional electron will cross the forbidden band, however wide it is. The higher the temperature the more will cross, so as with semiconductors the resistance decreases.

Conduction in a light-dependent resistor (LDR)

Revised

In an LDR the energy for an electron to cross the forbidden zone is supplied by a photon. The photon gives all its energy to the electron and it moves from the valence band to the conduction band (Figure 29.12).

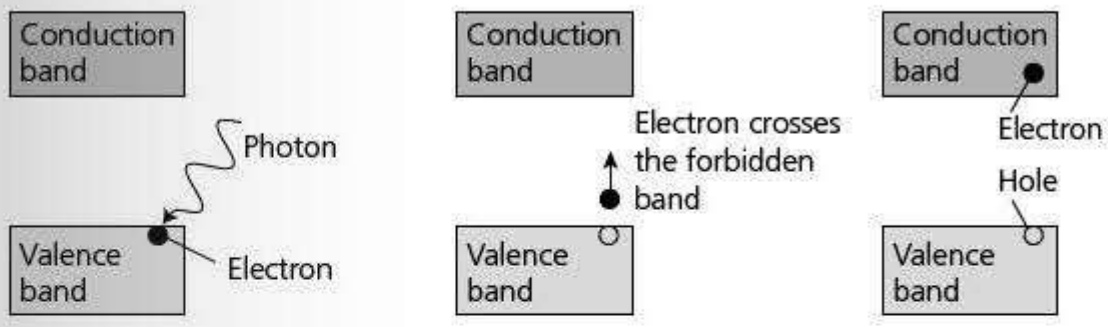

Figure 29.12 Conduction in a light-dependent resistor

The number of electrons crossing the forbidden zone is directly dependent on the number of photons striking the LDR per unit time, so the brighter the light the greater the number of charge carriers and the lower the resistance.

Production and use of X-rays

Production of X-rays

Revised

X-rays are formed when electrons are accelerated to very high energies (in excess of 50 KeV) and targeted onto a heavy metal. Most of the electron energy is converted to heat but a small proportion is converted to X-rays.

The cathode is not actually shown in Figure 29.13; it will be heated indirectly to a high temperature, which causes electrons to be emitted from the surface. This is known as **thermionic emission**. The anode is at a much higher potential than the cathode, so the electrons emitted by the cathode are accelerated towards it at very high speeds.

Thermionic emission is the emission of electrons from a hot metal surface.

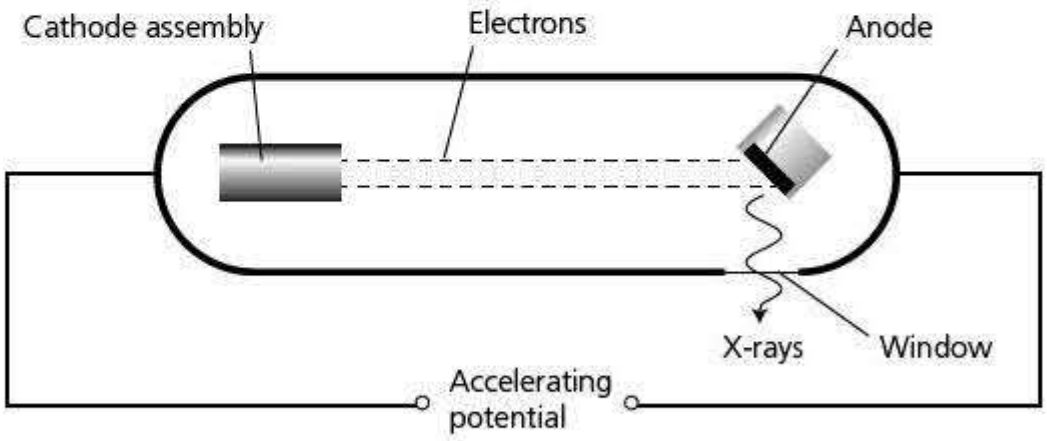

Figure 29.13 Principle of X-ray production

Table 29.1 shows some of the features of a modern X-ray tube.

Table 29.1

Modification	Reason
Rotating anode	To avoid overheating the anode
Coolant flowing round anode	To avoid overheating the anode
Thick lead walls	To reduce radiation outside the tube
Metal tubes beyond the window	Collimate and control the width of the beam
Cathode heating control	The cathode in a modern tube is heated indirectly; the current in the heater determines the temperature of the cathode

The intensity of the X-ray beam is controlled by the number of electrons hitting the anode per unit time. This is the **tube current**. The faster the rate of arrival of electrons, the higher is the intensity. The tube current is controlled by the rate of emission of electrons from the cathode. This in turn is controlled by the temperature of the cathode. The higher the temperature, the faster is the rate of emission of electrons.

Reducing the dose

A wide range of X-ray frequencies is emitted from a simple X-ray tube. The very soft (long) wavelength rays do not penetrate through the body of the patient, yet would add to the total dose received. An aluminium filter is used to absorb these X-rays before they reach the patient.

X-ray spectrum

Revised

A typical X-ray spectrum consists of a line emission spectrum superimposed on a continuous spectrum, as shown in Figure 29.14.

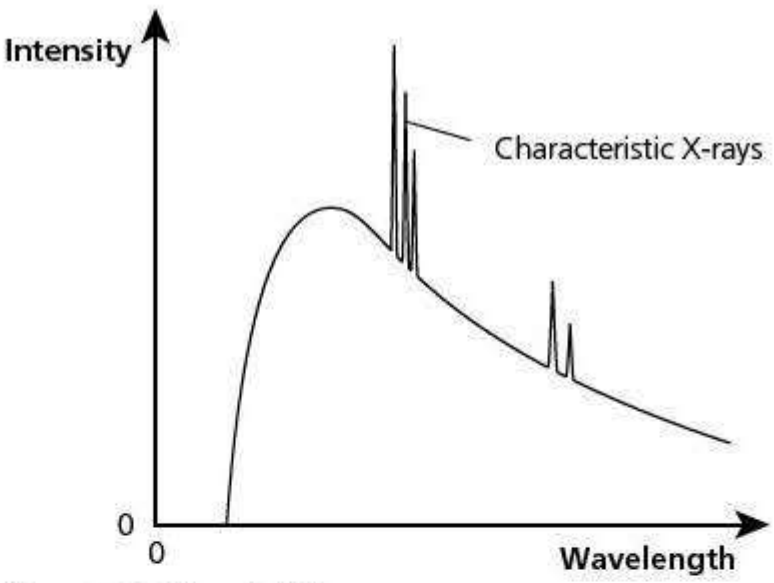

Figure 29.14 A typical X-ray spectrum

The continuous part of the spectrum is known as Bremsstrahlung or braking radiation. It is caused by the electrons interacting with atoms of the target and being brought to rest. Whenever charged particles are accelerated, electromagnetic radiation is emitted. The large decelerations involved in bringing the electrons to rest produce high-energy photons that are in the X-ray region. Sometimes the electrons lose all their energy at once, and at other times give it up through a series of interactions — hence the continuous nature of the spectrum. The maximum photon energy cannot be higher than the maximum energy of the incident electrons. This means that there is a sharp cut off at the maximum frequency/minimum wavelength of the X-rays, (remember the photon energy is directly proportional to the photon frequency). This cut-off point is determined by the accelerating potential.

The hardness of the X-rays is a measure of their penetrating effect. The higher the frequency of X-rays, the deeper their penetration. The frequency, and hence hardness, of X-rays is determined by the accelerating voltage; the higher the voltage the higher the frequency and the harder the X-ray.

The characteristic X-rays and their energies are dependent on the target metal; they are of little importance in medical physics. These are line emission spectra. The incident electrons excite the inner electrons of the anode material up to higher energy levels. When an excited electron drops back to the ground state, a photon of a specific energy, and hence frequency, is emitted.

Worked example

Calculate the minimum wavelength of X-rays that can be produced when electrons are accelerated through 120 kV.

Answer

energy of electrons = $eV = 1.6 \times 10^{-19} \times 120 \times 10^3 = 1.92 \times 10^{-14}$ J

$$E = hf = \frac{hc}{\lambda}$$

$$\text{So } \lambda = \frac{hc}{E} = \frac{6.63 \times 10^{-34} \times 3 \times 10^8}{1.92 \times 10^{-14}} = 1.04 \times 10^{-11}\,\text{m}$$

Uses of X-rays in medical imaging

Revised

The major use of X-rays is in diagnostics, particularly for broken bones and ulcerated tissues in the duodenum and other parts of the gut. Bone tissue is dense and is a good absorber of X-rays; flesh and muscle are much poorer absorbers. Therefore, if a beam of X-rays is incident on an area of damaged bone a shadow image is formed. The bones appear light, because very few X-rays pass through and reach the film. The background, where many X-rays reach the film, will be much darker. It is worth noting that this is a 'negative' image.

When considering the diagnosis of ulcers there is little difference in the absorption by healthy tissue and ulcerated tissue. In order to improve the **contrast**, the patient is given a drink containing a salt that is opaque to X-rays. The ulcerated tissue absorbs more of the salt than healthy tissue and hence absorbs much more of the X-radiation. This material, often a barium salt, is called a **contrast medium**.

The **contrast** is a measure of the difference in brightness between light and dark areas.

A **contrast medium** is a material that is a good absorber of X-rays, which consequently improves the contrast of an image.

Clarity of images

Revised

The clarity or clearness of an image depends on the contrast between the dark areas and the light areas and on the sharpness of the image. Table 29.2 gives the main methods by which contrast can be improved.

Table 29.2

Method	Detail
Contrast medium	Used to distinguish between soft tissues
Longer exposure time	This improves contrast but has the disadvantage of increasing the patient's exposure to X-radiation
Choice of X-ray hardness	Much harder (more penetrative) X-rays are used for investigating bone injuries than for soft-tissue diagnosis, e.g. stomach ulcers
Image intensifier	At its simplest, an image intensifier can be a fluorescent sheet placed at the back of the photographic film; X-rays that pass through the film hit this, causing it to fluoresce; the detector picks this up, making the dark parts darker; more sophisticated image intensifiers consist of cells in which the incident X-rays liberate electrons in a photocathode; these are fed to a digital detector

The sharpness of an image is determined by the width of the incident beam and its collimation (how parallel it is). The narrower the beam, the sharper is the image.

The cross-section of the beam depends on:

- the size of the anode — the larger the anode, the wider the beam
- the diameter of the window — the larger the window, the wider the beam

Likewise, the better the collimation the sharper is the image. This can be improved by passing the beam through narrow slits, as shown in Figure 29.15.

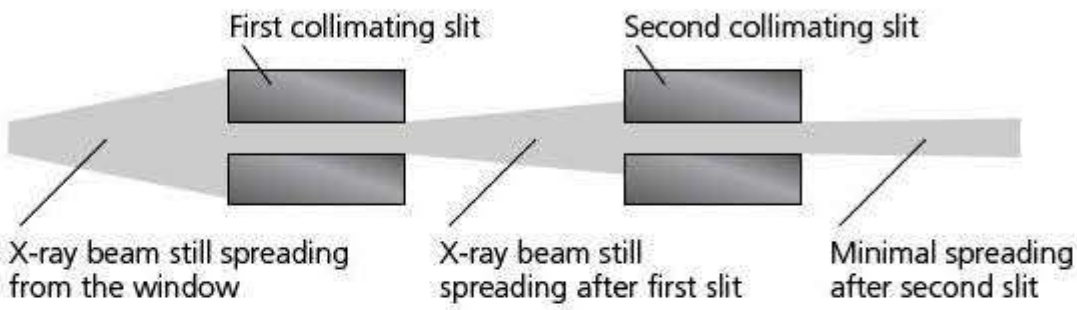

Figure 29.15 Collimation of an X-ray beam

Scattering

Some X-rays are scattered from various organs in the body. If these reach the plate on which the image falls they lead to a loss of sharpness. To avoid this happening, an anti-scatter grid is used. This is a series of parallel aluminium and lead plates, as shown in Figure 29.16.

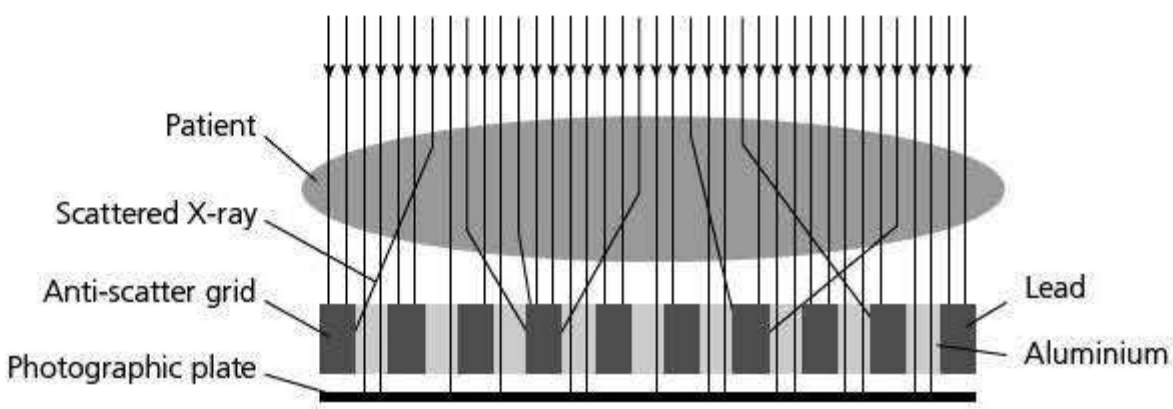

Figure 29.16 An anti-scatter grid

The aluminium allows the X-rays through, whereas the lead absorbs any scattered X-rays.

Attenuation of X-rays

Revised

The formal term for the decrease in intensity of a signal as it passes through a material is **attenuation**. Attenuation of X-rays depends on the material it is passing through — for dense materials such as bone it is high; for less dense

material such as flesh it is much lower. However, for each, the attenuation (provided the beam is parallel) is exponential in nature, giving the equation:

$$I = I_0 e^{-\mu x}$$

where I is the intensity, I_0 is the initial intensity, μ is the linear attenuation (or absorption) coefficient and x is the thickness of material the signal has passed through.

The mathematics of, and dealing with, this equation are identical to that for the radioactive decay equation. The equivalent of half-life is the **half-value thickness** (h.v.t.) of the material. This is the thickness of material that reduces the intensity of the incident signal to half of its original intensity.

The linear attenuation coefficient depends not only on the material but also on the hardness of the X-rays that are used.

The **half-value thickness** of material is the thickness that reduces the intensity of the incident signal to half its original intensity.

Worked example

Bone has a linear attenuation coefficient of $0.35\,\text{cm}^{-1}$ for X-rays of a particular frequency.

Calculate the half-thickness of bone for this type of X-ray.

Answer

$$x_{½} = \frac{\ln 2}{\mu} = \frac{0.693}{0.35} = 2.0\,\text{cm}$$

Revision activity

- Compare the equation in the worked example with the equation for finding the half-life of a radioactive isotope on page 198. You will also see a similar equation if you compare these with the equation for the absorption of ultrasound on page 131.

Computerised tomography scanning

Revised

The traditional use of X-rays has the major disadvantage of producing only a shadow image. This makes it difficult to identify the true depth of organs. Computerised tomography (CT) takes the technology of X-rays a step further. The main principles of CT scanning are:

- The patient lies in the centre of a ring of detectors (Figure 29.17). An X-ray source moves around the patient, taking many images at different angles.
- The images are put together, using a powerful computer, to form an image of a slice through the patient.
- The patient is moved slightly forward so an image of another slice is made. This is repeated for many slices.
- The computer puts the slices together to form a three-dimensional image that is rotated so that medical practitioners can view the image from different angles.

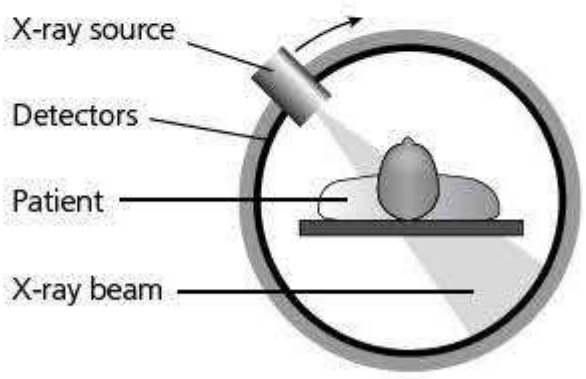

Figure 29.17

Build up of the image

The body part under investigation is split into tiny cubes called **voxels**. The build-up of the picture depends on voxels having different linear absorption coefficients, allowing different signal strengths to reach the detector. As the camera is moved round the circle, the signal strengths from different directions are measured and an image is built up. The intensity of the beam is reduced as it passes through each voxel. This reduction gives the **pixel intensity** (w, x, y and z). Figure 29.18 on the next page shows how a CT image is built up.

This calculation is greatly simplified. In reality, there are far more voxels and the scanner takes readings at hundreds of angles to produce a picture of just one slice. In addition to this, X-rays of different hardness are used in order to identify different types of tissue. You can begin to see the necessity for the use of a powerful computer to do the calculations, and you may not even have started to think about combining the many slices to form a three-dimensional image!

A **voxel** is a small cube of tissue.

Pixel intensity is the intensity of the X-ray beam after passing though voxels.

Revision activity

- Add the following must-learn equations to your list:

$$E = hf$$

$$E = hf + \phi$$

$$hf = E_1 - E_2$$

$$\lambda = \frac{h}{p}$$

Step 1

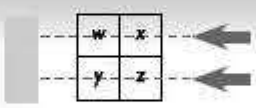

X-rays are incident on the voxel cube. The detector adds pixel intensities receiving a total of $w + x$ on the upper layer and $y + z$ on the lower layer, interpreting this as an array:

$w + x$	$w + x$
$y + z$	$y + z$

Step 2

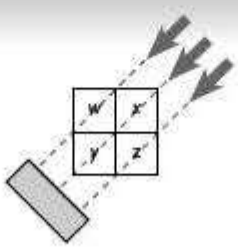

The X-ray tube swings round. When the X-ray source is at 45°, the detector interprets this as an array:

w	$x + y$
$x + y$	z

This is added to the array in Step 1 to give:

$2w + x$	$w + 2x + y$
$x + 2y + z$	$y + 2z$

Step 3

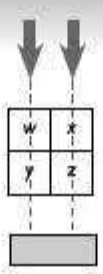

Now consider the position when the X-ray tube has swung round a further 45°. The detector interprets this as an array:

$w + y$	$x + z$
$w + y$	$x + z$

This is added to the array in Step 2 to give:

$3w + x + y$	$w + 3x + y + z$
$w + x + 3y + z$	$x + y + 3z$

Step 4

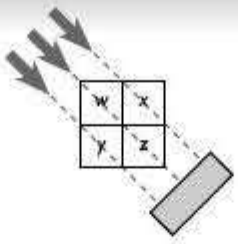

When the source swings round a further 45° the detector interprets this as an array:

$w + z$	x
y	$w + z$

Adding this to the final array in Step 3 gives:

$4w + x + y + z$	$w + 4x + y + z$
$w + x + 4y + z$	$w + x + y + 4z$

Step 5

The background intensity is subtracted from the totals — this is the sum of the intensities at any one position, in this case: $w + x + y + z$.

minus:

$w + x + y + z$	$w + x + y + z$
$w + x + y + z$	$w + x + y + z$

gives:

$3w$	$3x$
$3y$	$3z$

Step 6

This is then divided by 3 because the process is repeated at three more angles. This gives the original figures:

w	x
y	z

Try working through this procedure using the initial values 5, 6, 1 and 8.

Figure 29.18 Building up a CT image

Now test yourself

Tested

1 Calculate the energy of a photon of yellow light of frequency 5.1×10^{14} Hz.

2 Calculate the energy of an X-ray photon of wavelength 4.0×10^{-10} Hz.

3 Calculate the minimum frequency of electromagnetic radiation that will liberate an electron from the surface of magnesium. (work function of magnesium = 5.9×10^{-19} J)

4 Light of wavelength 4.5×10^{-7} m is incident on calcium. Calculate the maximum kinetic energy of an electron emitted from the surface. (work function of calcium = 4.3×10^{-19} J)

5 An electron is travelling at a speed of 3.2×10^{6} m s^{-1}.

a Calculate the wavelength of this electron.

b State and explain how the wavelength of a neutron travelling at the same speed would differ from that of the electron. (mass of an electron = 9.1×10^{-31} kg; mass of a neutron = 1.7×10^{-27} kg)

6 Soft tissue has an attenuation coefficient of 0.40 cm^{-1}. Calculate the percentage reduction in the signal when a beam passes through 4.5 cm of the tissue.

Answers on p.216

30 Particle and nuclear physics

Mass defect and nuclear binding energy

Mass and energy

Revised

The idea of mass–energy was introduced towards the end of Topic 13 — the higher the energy of an object the greater its mass. These two quantities are linked by Einstein's mass–energy equation:

$$E = mc^2$$

This equation quantifies the extra mass a body gains when its energy is increased and is sometimes referred to as the **mass excess**.

Expert tip

The more energy a particle has the more mass it has. It does not matter whether it is kinetic energy, potential energy or whatever. Einstein suggested that one way of looking at this is to consider that the energy itself has mass. In everyday experience this extra mass is so small we do not notice it — it is only in extreme circumstances that it becomes significant.

Worked example

A proton in a particle accelerator is accelerated through 4.5 GV. Calculate the increase in mass of the proton.

Answer

energy gained by the proton = 4.5 GeV

Convert this into joules:

$$E = 4.5 \times 10^9 \times 1.6 \times 10^{-19} = 7.2 \times 10^{-10}\,\text{J}$$

$$E = mc^2$$

Therefore:

$$m = \frac{E}{c^2} = \frac{7.2 \times 10^{-10}}{(3.0 \times 10^8)^2} = 8.0 \times 10^{-27}\,\text{kg}$$

This is an amazing result. The rest mass of a proton is 1.66×10^{-27} kg. The increase in mass is almost five times this, giving a total mass of almost six times the rest mass.

Nuclear reactions

Revised

You have already met radioactive decay in earlier courses and should be familiar with decay equations such as that for polonium decay when it emits an alpha particle:

$$^{241}_{95}\text{Am} \rightarrow {}^{237}_{93}\text{Np} + {}^{4}_{2}\alpha + \text{energy}$$

Another common form of decay is beta decay:

$$^{90}_{38}\text{Sr} \rightarrow {}^{90}_{39}\text{Y} + {}^{0}_{-1}\beta + \text{energy}$$

Although alpha, beta and gamma decays are the most common forms of decay, there are many other possibilities. An important example is the formation of carbon-14 in the atmosphere. A neutron is absorbed by a nitrogen nucleus, which then decays by emitting a proton:

$$^{14}_{7}\text{N} + {}^{1}_{0}\text{n} \rightarrow {}^{14}_{6}\text{C} + {}^{1}_{1}\text{p}$$

Expert tip

You should recognise that both the total nucleon number and the total proton number are conserved in every decay.

Worked example

A $^{16}_{8}O$ nucleus absorbs a neutron. The newly formed nucleus subsequently decays to form a $^{17}_{9}F$ nucleus.

(a) Write an equation to show the change when the neutron is absorbed.

(b) Deduce what type of particle is emitted when the decay of the newly formed nucleus occurs.

Answer

(a) $^{16}_{8}O + ^{1}_{0}n \rightarrow ^{17}_{8}O$

(b) When the $^{17}_{8}O$ nucleus decays to form the $^{17}_{9}F$ nucleus, the following changes occur:

new proton number = 9, old proton number = 8

new nucleon number = 17, old nucleon number = 17

The particle that is emitted therefore has a proton number of −1 and a nucleon number of 0. This is a β particle ($^{0}_{-1}\beta$).

Binding energy and mass defect

Revised

Just as with the energy levels in the outer atom and with the electrical energy of a negative particle near a positive charge, the field inside a nucleus can be considered attractive.

The zero of energy, as in the gravitational and electrostatic field, is taken as infinity and, therefore, the particles in the nucleus have negative energy. To separate a nucleus into its constituent protons and neutrons, work must be done. This work is called the **binding energy**.

All nuclides have different binding energies; the binding energy per nucleon in a nuclide is a measure of its stability. The more energy needed to tear the nucleus apart, the less likely it is to be torn apart. A binding energy curve showing the general trend and specific important nuclides is shown in Figure 30.1.

Expert tip

Be careful here — there is electrostatic repulsion between the protons inside the nucleus. The attractive forces that hold the nucleus together are *not* electrostatic in nature.

The **binding energy** of a nuclide is the work done or energy required to separate, to infinity, the nucleus into its constituent protons and neutrons.

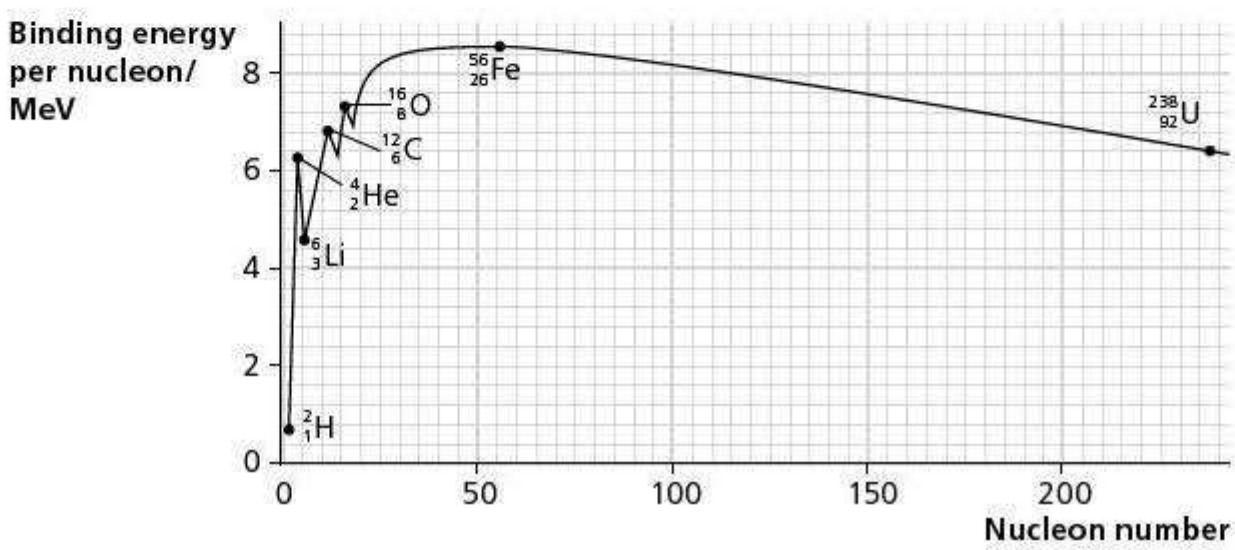

Figure 30.1 Binding energy curve

In particular, note the high binding energies for $^{4}_{2}He$, $^{12}_{6}C$ and $^{16}_{8}O$. The highest binding energy per nucleon, and therefore the most stable nuclide, is $^{56}_{26}Fe$.

Binding energies are very large and hence there is a measurable difference in the mass of a proton that is bound in a nucleus and that of a free proton at rest. The shape of the curve for the 'missing mass' per nucleon, known as the **mass defect** per nucleon, is exactly the same as that for binding energy.

The **mass defect** of a nuclide is the difference in mass between the nucleus of a nuclide and the total mass of the nucleons of that nuclide, when separated to infinity.

Worked example

A carbon-12 atom consists of 6 protons, 6 neutrons and 6 electrons. The unified mass unit (u) is defined as 1/12 the mass of the carbon-12 atom. Calculate:

(a) the mass defect in kilograms

(b) the binding energy

(c) the binding energy per nucleon

(mass of a proton = 1.007 276 u; mass of a neutron = 1.008 665 u; mass of an electron = 0.000 548 u, 1 u = 1.66×10^{-27} kg)

Answer

(a) mass of 6 protons + 6 neutrons + 6 electrons
$= 6 \times (1.007\,276 + 1.008\,665 + 0.000\,548)\,\text{u} = 12.098\,934\,\text{u}$

mass defect $= 12.098\,934 - 12 = 0.098\,934\,\text{u}$
$= 0.098\,934 \times 1.66 \times 10^{-27}\,\text{kg} = 1.64 \times 10^{-28}\,\text{kg}$

(b) binding energy, $E = mc^2 = 1.64 \times 10^{-28} \times (3.0 \times 10^8)^2$
$= 1.48 \times 10^{-11}\,\text{J}$

(c) binding energy per nucleon $= \dfrac{1.48 \times 10^{-11}}{12} = 1.23 \times 10^{-12}\,\text{J}$

Nuclear fission

Revised

Fission is the splitting of a nucleus into two roughly equal-sized halves with the emission of two or three neutrons. If you look at the binding energy curve in Figure 30.1, you will see that the nuclides with nucleon numbers between about 50 and 150 have significantly more binding energy per nucleon than the largest nuclides with nucleon numbers greater than 200. A few of these larger nuclides are liable to fission. Fission happens rarely in nature. However, physicists can induce fission by allowing large, more stable nuclides to capture a neutron to form an unstable nuclide. For example, a uranium-235 nucleus, which is found in nature, can capture a slow-moving neutron to form a uranium-236 nucleus.

$$^{235}_{92}\text{U} + ^{1}_{0}\text{n} \rightarrow ^{236}_{92}\text{U}$$

This nucleus is unstable and will undergo fission (Figure 30.2):

$$^{236}_{92}\text{U} \rightarrow ^{146}_{57}\text{La} + ^{87}_{35}\text{Br} + 3^{1}_{0}\text{n}$$

In Figure 30.2:

- Step 1 — a neutron trundles towards a U-235 nucleus
- Step 2 — the U-235 nucleus absorbs the neutron to form an unstable U-236 nucleus
- Step 3 — the U-236 nucleus splits into two roughly equal halves (the fission fragments), which fly apart; three neutrons are released, which also fly away at high speeds

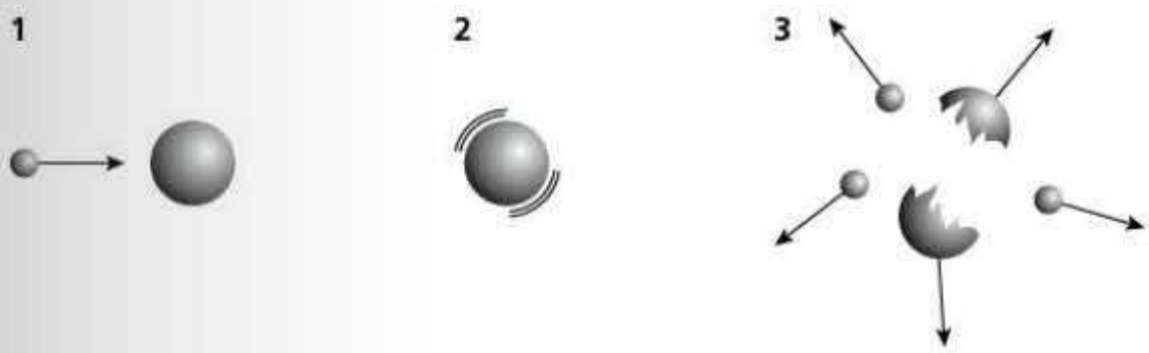

Figure 30.2 A cartoon view of fission

Most of the energy in fission is carried away by the fission fragments as kinetic energy, although some is carried away by the neutrons. In addition, gamma rays are formed. Some are formed almost immediately and some are formed later as the nucleons in the fission fragments rearrange themselves into a lower, more stable energy state.

Fission is used in all working nuclear power stations. If the fissionable nuclide being used is uranium, the neutrons released are slowed down, so that they cause new fissions to keep the process going. For power generation, each fission

must, on average, produce one new fission to keep the reaction going at a constant rate.

The earliest nuclear weapons used fission. The principle is the same but in this case each fission must induce more than one new fission on average, so that the reaction rate rapidly gets faster and faster, causing an explosion.

Nuclear fusion

Revised

Nuclear fusion can be thought of as the opposite of fission. Two small nuclei move towards each other at high speed, overcome the mutual electrostatic repulsion and merge to form a larger nucleus (Figure 30.3). If you look at the binding energy curve in Figure 30.1 again, you will see that the binding energy per nucleon of deuterium ($^{2}_{1}H$) is much less than that of helium ($^{4}_{2}He$). So two deuterium nuclei could fuse to form a helium nucleus with the release of energy. In practice, the fusion of tritium ($^{3}_{1}H$) and deuterium is more common:

$$^{2}_{1}H + ^{3}_{1}H \rightarrow ^{4}_{2}He + ^{1}_{0}n$$

Fusion releases much more energy per nucleon involved than fission. The difficulty in using fusion commercially is that the pressure and temperature of the fusing mixture are extremely high — so high that all the electrons are stripped from the nuclei and the mixture becomes a sea of positive and negative particles called a plasma. A physical container cannot be used to hold the plasma — it would immediately vaporise (not to mention cool the plasma). Extremely strong magnetic fields are used to contain the plasma. Even though scientists have not yet solved the problems of controlling nuclear fusion, we rely on it because it is the process that fuels the Sun.

In Figure 30.3:

- Step 1 — a deuterium nucleus and a tritium nucleus move towards each other at high speed
- Step 2 — they collide and merge
- Step 3 — a helium nucleus and a neutron are formed and fly apart at high speed

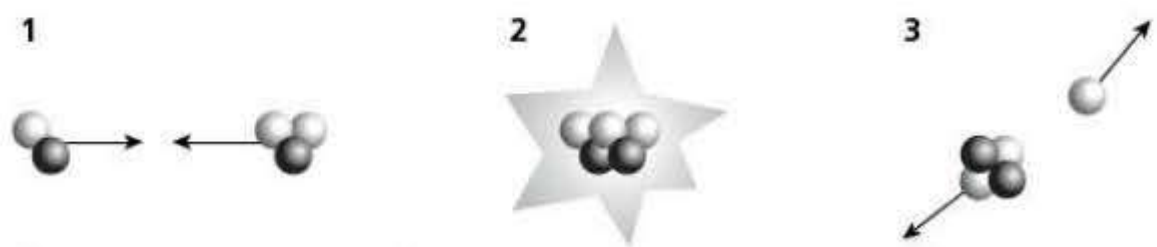

Figure 30.3 A cartoon view of fusion

Radioactive decay

Some nuclides are unstable and decay by emitting radiation; this is known as **radioactive decay**. The rate of radioactive decay is not dependent on outside conditions (e.g. temperature, pressure). In this sense, the decay is said to be **spontaneous**. It is only dependent on the stability of the particular nuclide. However, if only a single nucleus is considered it is impossible to predict *when* it will decay. In this way, radioactive decay is **random**. However, we can say that there is a fixed chance of decay occurring within time Δt. Hence, a fixed proportion of a sample containing millions of atoms will decay in that time interval. This randomness is clearly demonstrated by the fluctuations in the count rate observed when radiation from a radioactive isotope is measured with a Geiger counter or other detector.

A mathematical treatment of radioactive decay

Revised

The random nature of radioactive decay means we cannot tell when a particular nucleus will decay, only that there is a fixed chance of it decaying in a given time interval. Thus, if there are many nuclei we can say:

$$A = \lambda N$$

where A is the **activity**, N is the total number of nuclei in the sample and λ is a constant, known as the **decay constant**.

The **activity** of a sample of radioactive material is the number of decays per unit time.

The **decay constant** is the probability per unit time that a nucleus will decay.

The activity is measured in a unit called the **bequerel** (Bq). The decay constant is measured in s^{-1}, min^{-1}, yr^{-1} etc.

One **bequerel** is an activity of 1 decay per second.

If you measure the activity of an isotope with a relatively short half-life (say 1 minute) then you can plot a graph similar to Figure 30.4.

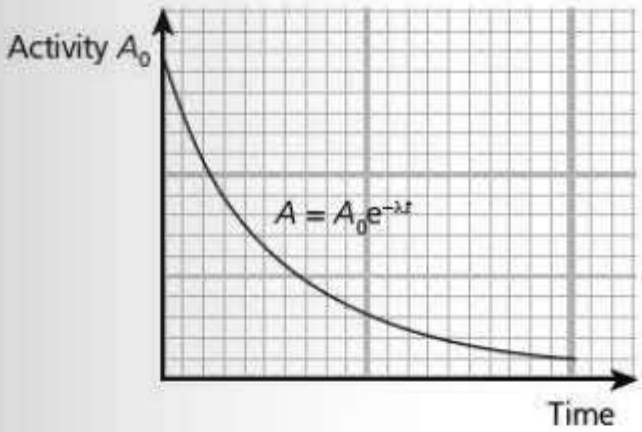

Figure 30.4 Exponential decay of a radioactive isotope

If you study this graph, you will find that the activity falls by equal proportions in successive time intervals. The number of atoms decaying in a fixed period decreases because the number of atoms remaining is decreasing. This type of decay is called exponential decay and the equation that describes it has the form:

$$x = x_0 e^{-\lambda t}$$

In the example given in Figure 30.4, the y-axis is labelled activity A, but because the activity is directly proportional to the number of nuclei present (N) it could equally be N. The count rate is directly proportional to the activity, so y could also apply to this.

Half-life and radioactive decay

Revised

Look at Figure 30.4 again. You have already observed that the activity decreases by equal proportions in equal time intervals. Now look at how long it takes to fall to half the original activity. How long does it take to fall to half this reading (one-quarter of the original)? How long does it take to fall to half of this? You should find that each time interval is the same. This quantity is called the **half-life ($t_{½}$)**.

The **half-life** of a radioactive isotope is the time taken for half of the nuclei of that isotope in any sample to decay.

Investigation of radioactive decay

When investigating the decay of a radioactive isotope it is not possible to measure directly either the number of atoms of the isotope remaining in the sample, or the activity of the sample. The detector detects only a small proportion of the radiation given off by the sample. Radiation is given off in all directions and most of it misses the detector. Even radiation that enters the detector may pass straight through it without being detected. What is measured is called the **received count rate**. The background count rate should be subtracted from the received count rate to give the corrected count rate.

Half-life and the decay constant

If the decay equation is applied to the half-life it becomes:

$$\tfrac{1}{2}N_0 = N_0 e^{-\lambda t_{1/2}}$$

Cancelling the N_0 gives:

$$\tfrac{1}{2} = e^{-\lambda t_{1/2}}$$

Taking logarithms of both sides:

$$\ln(\tfrac{1}{2}) = -\lambda t_{1/2}$$

$$\ln(\tfrac{1}{2}) = -\ln 2$$

Therefore:

$$\ln 2 = \lambda t_{1/2}$$

and

$$t_{1/2} = \frac{\ln 2}{\lambda}$$

Remember that ln 2 is the natural logarithm of 2 and is approximately equal to 0.693.

Worked example

The proportion of the carbon-14 isotope found in former living material can be used to date the material.

The half-life of carbon-14 is 5730 years. A certain sample has 76.4% of the proportion of this isotope compared with living tissue.

(a) Calculate the decay constant for this isotope of carbon.

(b) Calculate the age of the material.

Answer

(a) $\lambda = \frac{\ln 2}{t_{1/2}} = -\frac{0.693}{5730} = 1.21 \times 10^{-4}\,\text{year}^{-1}$

(b) $N = N_0 e^{-\lambda t}$

$$\ln\left(\frac{N}{N_0}\right) = -\lambda t$$

$$t = -\ln\left(\frac{76.4/100}{1.21 \times 10^{-4}}\right) = 2200\,\text{years}$$

Revision activities

- Two of the important concepts and key terms in this section are mass defect and binding energy. Make sure you understand the link between them and their link to the stability of different nuclides.
- Go on to explain why energy is released in both fission and fusion. Discuss this with a fellow student — see if you agree with each other.
- Add the following must-learn equations to your list:

  $E = mc^2$

  $N = N_0 e^{-\lambda t}$

Now test yourself

Tested

1 A helium-4 nucleus consists of 2 protons and 2 neutrons and has a mass of $6.6464776 \times 10^{-27}$ kg. Calculate **a** the mass defect and **b** the binding energy of the helium-4 nucleus. (mass of a neutron = $1.6749286 \times 10^{-27}$ kg; mass of a proton = $1.6726231 \times 10^{-27}$ kg)

2 Copy and complete the equation, which shows a possible fission of plutonium:

$^{239}_{94}\text{Pu} + ^{1}_{0}\text{n} \rightarrow ^{\dots}_{\dots}\text{Pu} \rightarrow ^{150}_{\dots}\text{Nd} + ^{88}_{34}\text{Se} + \dots ^{1}_{0}\text{n}$

3 The activity of a sample of radioactive titanium falls by 1% after 40 hours. Calculate **a** the decay constant and **b** the half-life of the isotope.

Answers on p.216

A level experimental skills and investigations

Practical skills and investigations are examined on Paper 5, which is worth 30 marks. This is not a laboratory-based paper but, nevertheless, it tests the practical skills that you should have developed during the second year of your course.

The syllabus explains each of these skills in detail. It is important that you read the appropriate pages so that you know what each skill is, and what you will be tested on.

The examination questions

There are usually two questions on Paper 5, each worth 15 marks. Question 1 tests planning skills. Question 2 tests analysis, conclusions and evaluation. Read the questions carefully and make sure that you know what is being asked of you.

Question 1

Revised

This question asks you to plan an investigation. It is an open-ended question, which means that you need to think carefully about your answer before you start. There are various stages in planning an investigation.

Stage 1: define the problem

This requires you to look at the task that has been assigned and to identify the variables that impact on the problem:

- the independent variable (the variable that *you* control)
- the dependent variable (the variable that changes as a result of your changing the independent variable)
- any other variables that might affect your results, and which you need to control — generally by attempting to keep them constant

Stage 2: data collection

Once you have identified the variables, you have to decide on a method. You have to describe this method. You will almost certainly need to include a simple diagram to show the required apparatus. The description should include how you are going to take measurements and how you intend to control any variables that might lead to the basic relationship between the independent and dependent variables being obscured. At this stage, you need to think about any safety precautions you need to take.

Stage 3: analysis of results

The third stage in an investigation is the analysis of results. This will include:

- derived quantities that have to be calculated
- graphs that are to be plotted to identify the relationships between the variables

Expert tip

Before the exam: your practical course should include practice in designing and carrying out experiments. It is only by carrying out experiments that you will learn to look critically at the design and see the flaws in them.

In the exam: the examiner is highly unlikely to give you an experiment that you have met before, so do not be put off by something that seems unfamiliar. There will be prompts to guide you in answering the question. It is important that you look at these prompts and follow them carefully.

Question 2

Revised

This question takes an experiment that has been carried out and has had the results recorded for you. Your tasks are to analyse the results, including:

- calculating derived quantities and their uncertainties
- plotting suitable graphs to enable conclusions to be drawn
- evaluating the conclusions with regard to the calculated figures and the uncertainties

The syllabus requires that you should be able to:

- rearrange expressions into the forms $y = mx + c$, $y = ax^n$ and $y = ae^{kx}$
- plot a graph of y against x and use the graph to find the constants m and c in an equation of the form $y = mx + c$
- plot a graph of $\lg y$ against $\lg x$ and use the graph to find the constants a and n in an equation of the form $y = ax^n$
- plot a graph of $\ln y$ against x and use the graph to find the constants a and k in an equation of the form $y = ae^{kx}$

How to get high marks in Paper 5

Question 1

Revised

To demonstrate the stages in answering a question, it is useful to consider a particular question. Suppose the examiner asks you to investigate energy loss and its relationship with the thickness of a specific type of insulation.

Before starting you should have in your mind the sort of experiment that you would do to investigate these variables. There is no unique solution. One possibility is to put heated water in a beaker that has insulation wrapped around it and then to measure the rate of cooling of the water.

Stage 1

The independent variable is the thickness of insulation that is used. The dependent variable is the energy lost from the container per unit time. What other variables need to be controlled? Before you read any further, you should jot down some ideas.

Here are some thoughts that you might have considered:

- maintaining the same mass of water throughout the experiment
- the temperature of the surroundings should be kept constant
- the temperature fall during the test should be much smaller than the temperature difference between the container and the surroundings
- evaporation from the surface of any liquid used should be reduced to a minimum

Stage 2

The next task is to think about how you are going to carry out the experiment. Once you have a method in mind you need to:

- describe the method to be used to vary the independent variable
- describe how the independent variable is to be measured
- describe how the dependent variable is to be measured
- describe how other variables are to be controlled
- describe, with the aid of a clear labelled diagram, the arrangement of apparatus for the experiment and the procedures to be followed
- describe any safety precautions that you would take

In the experiment to investigate the energy loss through insulation, you may decide that the simplest way of varying the independent variable is to place the 'test beaker' inside a series of larger beakers and to fill the space between them with the insulating material. The thickness of the insulating material can then be calculated from the diameters of the different beakers and of the test beaker. These diameters could be measured using the internal jaws of a pair of vernier calipers. The energy loss could be measured by the temperature drop of the water in a specified time, or better, the time taken for a specified drop.

You should then describe how to ensure that other variables are controlled. You might use a top-pan balance to measure the mass of the test beaker and water between each set of readings. You could ensure that the water is at the same temperature each time by heating it in a constant temperature water bath (and then double checking the temperature before starting the stopwatch).

What extras might you include to ensure that your investigation is as accurate as possible? This tests your experience of doing practical work. Have you sufficient experience to spot things that would improve the experiment?

Some of the ideas in the introduction to this part might be included. You might be able to think of some more:

- Choose a temperature drop that is much less than the difference between the starting temperature and room temperature.
- Stir the water in the bath so that it all reaches a uniform temperature.
- Make sure that the water is at the same starting temperature each time.
- Make sure that the room temperature is constant.
- Put a lid on the test beaker to prevent evaporation.
- Use a digital thermometer so that it is easy to spot when the temperature has fallen to a predetermined value.

Finally, a simple diagram of the apparatus is required. This will save a lot of description and can avoid ambiguities.

Expert tip

You might find it helpful to write out your description of the stages as a list of bullet points, rather than as continuous writing. Try it now with this example.

Stage 3

You will probably be told the type of relationship to expect. From this you should be able to decide what graph it would be sensible to plot. In this example, it might be suggested that the relationship between the variables has the form:

$$\frac{\Delta E}{\Delta t} = ae^{-kx}$$

where $\Delta E/\Delta t$ is the rate of loss of energy, x is the thickness of the insulation and a and k are constants.

Taking logarithms of both sides of the equation gives:

$$\ln\frac{\Delta E}{\Delta t} = -kx + \ln a$$

Consequently, if you draw a graph of $\ln(\Delta E/\Delta t)$ against x it should be a straight line with a negative gradient. The gradient equals k and the intercept on the y-axis is equal to $\ln a$.

Question 2

Revised

How you tackle this will depend on which relationship the question asks you to explore. The most likely relationships have the form $y = ae^{kx}$ or $y = ax^n$

Relationship $y = ae^{-kx}$

To tackle this type of relationship you need to plot a graph of $\ln y$ against x.

Worked example

Consider the experiment described in Question 1. This table provides a possible set of results.

Thickness of insulation (x)/cm	Time taken for the temperature to fall 5.0°C/s	Rate of temperature fall ($\Delta T/\Delta t$)/°C s^{-1}	ln(($\Delta T/\Delta t$)/°C s^{-1})
2.0	110	0.0455	−3.09
3.1	127	0.0393	−3.24
4.3	149	0.0336	−3.39
5.1	165	0.0303	−3.50
6.4	195	0.0256	−3.67
7.2	216	0.0231	−3.77

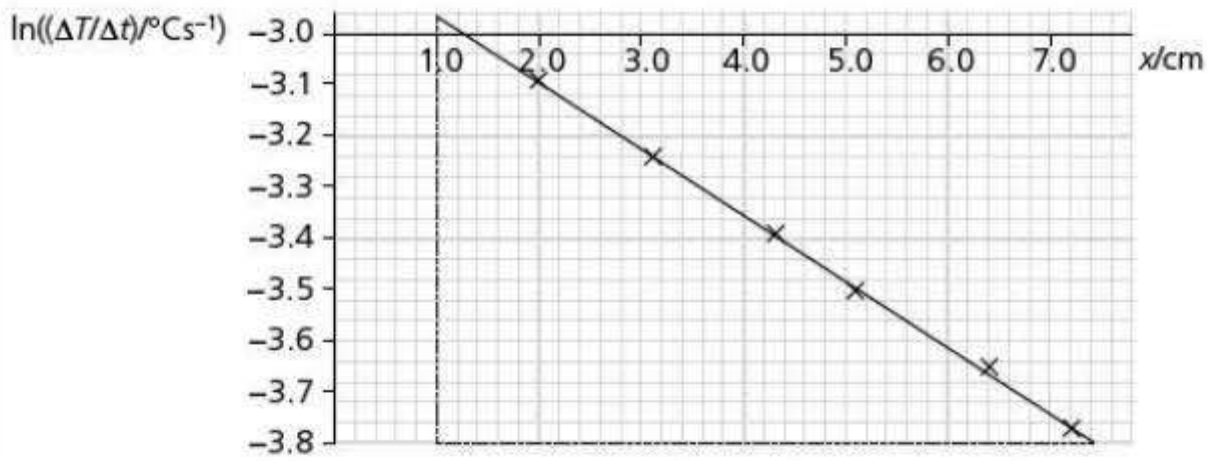

Choose the points (1.0, −2.96) and (7.4, −3.80) to calculate the gradient:

$$\text{gradient} = \Delta y/\Delta x = \frac{-2.96 - (-3.80)}{1.0 - 7.4} = \frac{0.84}{-6.4} = -0.13$$

Hence, $k = -0.13\,\text{cm}^{-1}$

To find a, choose a single point and use the generic equation for a straight line, $y = mx + c$. In this case, $y = \ln(\Delta T/\Delta t) + c$. So, choosing the point (1.0, −2.96):

$$-2.96 = -0.13 \times 1.0 + c$$

$$c = -2.83$$

$$c = \ln a$$

Therefore:

$$a = e^c = e^{-2.83} = 0.0590\,°\text{C s}^{-1}$$

Relationship $y = ax^n$

For this type of relationship you need to draw a graph of lg$x$ against lg$y$.

Worked example 1

An experiment is set up to investigate the diffraction of electrons by a carbon film. The diagram shows the experimental setup.

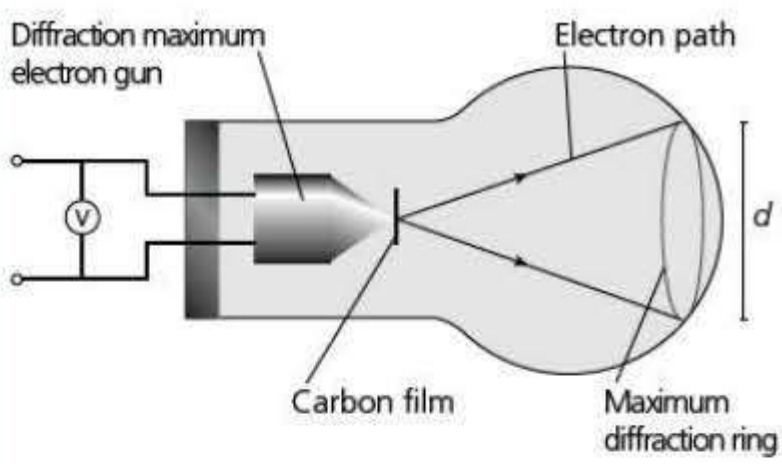

The diameter of the diffraction maximum ring was measured at different accelerating voltages.

The results are recorded in the table.

V/V × 10^3	d/m × 10^{-2}	lg(V/V)	lg(d/m)
2.0	9.8 ± 0.2	3.30	−1.01 ± 0.1
3.0	8.0 ± 0.2	3.48	−1.10 ± 0.1
4.0	6.9 ± 0.2	3.60	−1.16 ± 0.1
5.0	6.2 ± 0.2	3.70	−1.21 ± 0.2
6.0	5.6 ± 0.2	3.78	−1.25 ± 0.1

It is suggested that V and d are related by an equation of the form:

$$d = kV^n$$

where d is the diameter of the maximum ring, V is the accelerating voltage and k and n are constants.

Draw a graph to test the relationship between V and d. Include suitable error bars on your graph.

Draw the line of best fit through the points and also the worst acceptable line. Ensure that the lines are suitably labelled. →

Answer

To solve this type of problem a graph of lg(*V*/V) against lg(*d*/m) is required.

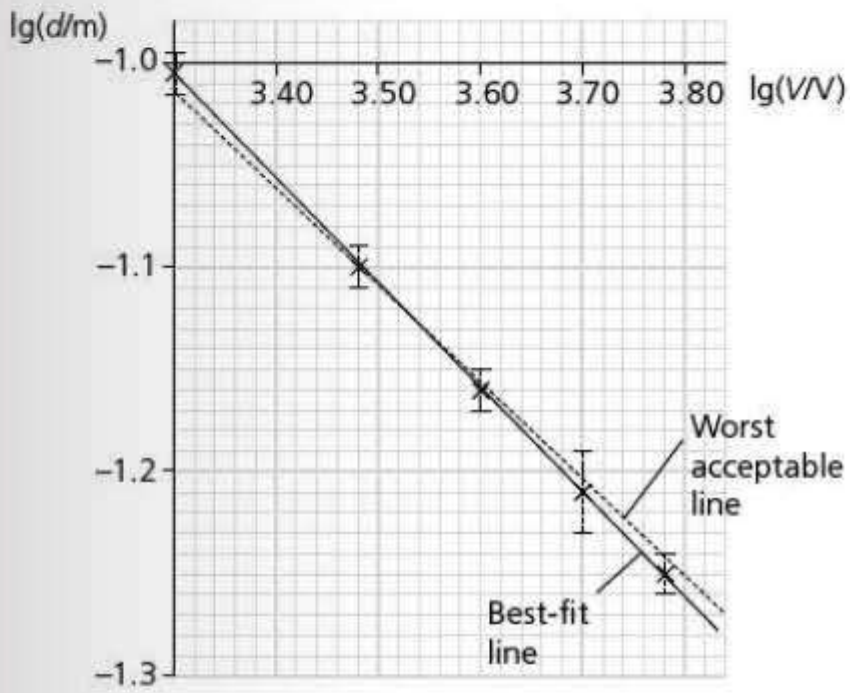

You will observe that the uncertainties for *d* and for lg(*d*/m) are given. In an examination, you would be given the former but you would have to work out the latter. This is done by finding the value of lg(*d*/m) for the recorded value and for either the largest or smallest value in the range.

For example, if:

$d/\text{m} = (8.0 \pm 0.2) \times 10^{-2}$

$\lg(8.0 \times 10^{-2}) = -1.10$ and $\lg(8.2 \times 10^{-2}) = -1.09$

uncertainty = 1.10 − 1.09 = 0.01

It is important to realise that this process is required for every value of *d*.

The graph is a straight line, which confirms that the relationship of the form $d = kV^n$ is valid.

Expert tip

The worst acceptable line is the line that has either the maximum or the minimum gradient and goes through all the error bars. In this example, the line of least gradient has been chosen.

Worked example 2

(a) Calculate the gradient of the line. Include the uncertainty in your answer.

(b) Determine the intercept of the line of best fit. Include the uncertainty in your answer.

Answer

(a) For the gradient of the best-fit line, choose the points (3.30, −1.01) and (3.88, −1.30).

$$\text{gradient} = \Delta y/\Delta x = \frac{-1.30 - (-1.01)}{3.88 - 3.30} = \frac{-0.29}{0.58} = -0.50$$

For the worst acceptable line, choose the points (3.30, −1.02) and (3.91, −1.30):

gradient = $\Delta y/\Delta x = (-1.30 - (-1.02))/(3.91 - 3.30) = -0.28/0.61 = -0.46$

gradient = -0.50 ± 0.04

(b) To calculate the intercept, use the generic equation for a straight line:

$y = mx + c$

where, in this example, $y = \lg(d/\text{m})$, m is the gradient = 0.50, $x = \lg(V/\text{V})$ and c is the intercept = $\lg k$.

Choose the point (3.30, −1.01)

$-1.01 = (-0.50 \times 3.30) + c$

$c = 0.64$

$k = 10^c = 10^{0.64} = 4.37\ (\text{mV}^{1/2})$

To find the uncertainty in *k*, repeat the procedure using the worst acceptable line. Choose the point (3.30, −1.02), with a gradient 0.54.

$-1.02 = (-0.54 \times 3.30) + c$

$c = 0.762$

$k = 10^c = 10^{0.762} = 5.78\ (\text{mV}^{1/2})$

The uncertainty in $k = \pm(5.78 - 4.37) = \pm 1.41\ (\text{mV}^{1/2})$

From these answers the full expression for the relationship can be written down:

$d = 4.4V^{-0.5}$ which could be written:

$$d = 4.4\sqrt{\frac{1}{V}}$$

The uncertainty in *k* makes it sensible to round to two significant figures.

A level exam-style questions and answers

This section provides a practice examination paper similar to Paper 4. All the questions are based on the topic areas described in previous sections of this book.

You have 2 hours to complete the paper. There are 100 marks on the paper, so you can spend just over 1 minute per mark. If you aim for 1 minute per mark this will give you some leeway and perhaps time to check through your paper at the end.

See page 90 for advice on using this practice paper.

Exemplar paper

Question 1

(a) Define gravitational potential at a point. [1]

(b) A planet has a mass of 6.4×10^{23} kg and radius of 3.4×10^{6} m.
The planet may be considered to be isolated in space and to have its mass concentrated at its centre.

(i) Calculate the energy required to completely remove a spacecraft of mass 800 kg from the planet's surface to outer space. You may assume that the frictional forces are negligible. [3]

(ii) A single short rocket burn was used for the spacecraft to escape from the surface of the planet to outer space. Calculate the minimum speed that the spacecraft would need to be given by the burn. [3]

(c) Calculate the gravitational field strength at the surface of the planet. [2]

[Total: 9]

Answer A

(a) Potential is the energy a mass has at a particular point in space. ✗

The student has not picked up on the central point that potential refers to potential energy per unit mass. *Mark: 0/1*

Answer A

(b) (i) energy $= -\frac{GMm}{r}$ ✓

$= -6.67 \times 10^{-11} \times 6.4 \times 10^{23} \times \frac{800}{3.4 \times 10^{6}}$

$= -1.0 \times 10^{10}$ J ✓✗

This is quite a good answer. Unfortunately the student is a little confused about the signs. The potential energy at the surface is indeed negative, because it is an attractive field. However, to give the spacecraft more negative energy suggests that it is burrowing into the ground! This mark scheme is strict in that it penalises the presence of the minus sign. Mark: 2/3

Answer A

(ii) kinetic energy $= \frac{1}{2}mv^2 = 1.0 \times 10^{10}$

$0.5 \times 800 \times v^2 = 1.0 \times 10^{10}$

$v^2 = \frac{1.0 \times 10^{10}}{0.5 \times 800}$

$= 2.5 \times 10^{7}$ m s^{-1} ✓✓✗

A good start is made; everything is worked through correctly until at the end, where the square root of the value obtained for v^2 is not taken. Mark: 2/3

Answer A

(c) $g = -\frac{GM}{r^2} = 6.67 \times 10^{-11} \times \frac{6.4 \times 10^{23}}{(3.4 \times 10^{6})^2} = 3.7$ N kg^{-1} ✓✓

Once more there is confusion over the minus sign, which suddenly disappears. However, a penalty for this was applied in part (b)(i), so there is no further penalty. Mark: 2/2

Answer B

(a) Potential at a point is the work done in bringing unit mass from infinity to that point. ✓

This is a perfect answer. It shows an understanding that potential is energy per unit mass and it uses the formal definition in terms of work. Mark: 1/1

Answer B

(b) (i) potential energy of the body $= -\frac{GMm}{r}$

So, energy that must be given to the body

$= 6.67 \times 10^{-11} \times 6.4 \times 10^{23} \times \frac{800}{3.4 \times 10^{6}}$

$= 1.0 \times 10^{10}$ J ✓✓✓

This is an excellent answer. The explanation is clear and the working is laid out so that it is easy to understand. Mark: 3/3

Answer B

(ii) kinetic energy = $\frac{1}{2}mv^2$ = the energy given for the spacecraft to escape from the planet

$0.5 \times 800 \times v^2 = 1.0 \times 10^{10}$

$v^2 = \frac{1.0 \times 10^{10}}{0.5 \times 800}$

$v = 5000\,\text{m s}^{-1}$ ✓✓✓

This is another excellent and clearly explained answer. Mark: 3/3

Answer B

(c) $g = -\frac{GM}{r^2} = -6.67 \times 10^{-11} \times \frac{6.4 \times 10^{23}}{(3.4 \times 10^6)^2} = -3.7\,\text{N kg}^{-1}$

The minus sign shows that the acceleration is towards the centre of the planet. ✓✓

This is another outstanding answer, with the added bonus of an explanation of the meaning of the minus sign. Mark: 2/2

Question 2

(a) Explain what is meant by internal energy. [2]

(b) 0.140 m³ of helium is contained in a cylinder by a frictionless piston. The piston is held in position so that the pressure of the helium is equal to atmospheric pressure and its temperature is 20 °C.
(atmospheric pressure = 1.02×10^5 Pa)

(i) Calculate the number of moles of helium in the container. [1]

(ii) Calculate the total kinetic energy of the helium atoms in the container. [3]

(c) The temperature of the helium is gradually increased to 77°C and the helium expands against atmospheric pressure.

(i) Calculate the volume of helium at 77°C. [1]

(ii) Calculate the total kinetic energy of the helium atoms at 77°C. [1]

(iii) Calculate the energy input to the helium. [2]

[Total: 10]

Answer A

(a) Internal energy is the kinetic energy of a molecule in a body. ✗✗

The student has some idea that internal energy is connected with the energy of the individual molecules but makes two serious errors. First, internal energy is not just the kinetic energy; it is the sum of the kinetic and potential energies. Second, considering a single molecule only is meaningless because an individual molecule is continually colliding and interacting with other molecules, so its kinetic and potential energies are continually changing. Mark: 0/2

Answer A

(b) (i) $n = 1.02 \times 10^5 \times \frac{0.14}{8.31 \times 20} = 85.9\,\text{mol}$ ✗

This is a common error. The student has forgotten to convert degrees Celsius to Kelvin. Mark: 0/1

Answer A

(ii) $pV = \frac{1}{3}Nm\langle c^2\rangle$, so $Nm\langle c^2\rangle = 3pV$
$= 3 \times 1.02 \times 10^5 \times 0.14 = 42\,840$ ✓

$E_k = \frac{1}{2}mv^2 = \frac{42\,840}{2} = 21\,420\,\text{J}$ ✓

This is done well. However, the lack of explanation means that it would have been difficult to award part marks had there been an arithmetical error. There is no penalty for the extra significant figure. Mark: 3/3

Answer A

(c) (i) $\frac{p_1V_1}{T_1} = \frac{p_2V_2}{T_2}$

$\frac{0.14}{20} = \frac{V_2}{77}$

$V_2 = 0.539\,\text{m}^3$ ✓ (e.c.f.)

This is an acceptable method of finding the new volume. However, the mistake of not converting to kelvin is repeated. It has not been penalised a second time, hence the error carried forward. Mark: 1/1

Answer A

(ii) $pV = \frac{1}{3}Nm\langle c^2\rangle$, so $Nm\langle c^2\rangle = 3pV$
$= 3 \times 1.02 \times 10^5 \times 0.539 = 164\,934\,\text{J}$

$E_k = \frac{1}{2} \times 164\,934 = 82\,467\,\text{J}$ ✓

This is calculated correctly. Mark: 1/1

Answer A

(iii) energy input = 82 467 − 42 840 = 39 627 J ✗

The student has simply found the differences in the kinetic energies, and has not recognised that the gas does work in expanding and therefore loses potential energy. Mark: 0/2

Answer B

(a) Internal energy is the sum of the random kinetic and potential energies of the particles in the body.

This is an excellent answer. The student has a clear idea of the concept. Mark: 2/2

Answer B

(b) (i) $pV = nRT$

$1.02 \times 10^5 \times 0.140 = n \times 8.31 \times 293$

$n = 5.86$ ✓

The calculation is correct. Mark: 1/1

Answer B

(ii) E_k for one atom $= \frac{3}{2}kT = \frac{3}{2} \times 1.38 \times 10^{-23} \times 293$

$= 6.07 \times 10^{-21}$ J ✓

total kinetic energy = energy of 1 atom × number of atoms

total $E_k = 6.07 \times 10^{-21} \times 5.86 \times 6.02 \times 10^{23}$

$= 2.14 \times 10^4$ J ✓✓

This is done well. This student has used a different method from that used in answer A. The use of the equation $E_k = \frac{3}{2}kT$ is a good way of solving the problem. Mark: 3/3

Answer B

(c) (i) $pV = nRT$

$V = 5.86 \times 8.31 \times \frac{350}{1.02 \times 10^5} = 0.167\,m^3$ ✓

The student has successfully applied the ideal gas equation. Mark: 1/1

Answer B

(ii) Temperature is proportional to E_k.

ratio of temperatures = ratio of the two E_k values

$\frac{350}{293} = \frac{\text{new } E_k}{2.14 \times 10^4}$

new $E_k = 2.56 \times 10^4$ J ✓

This is a neat, if slightly risky, way of doing this calculation. It might be more orthodox to go through the $E_k = \frac{3}{2}kT$ calculation again. Mark: 1/1

Answer B

(iii) $\Delta U = \Delta Q + \Delta W = \Delta Q + p\Delta V$

$\Delta Q = \Delta U - p\Delta V$

$= (2.56 - 2.14) \times 10^4 - ((0.140 - 0.167) \times 1.02 \times 10^5)$

$= 4200 + 2750 \approx 6.95 \times 10^4$ J ✓✓

This is an outstanding answer. The student clearly understands the physics and has worked through the problem sensibly. Notice that ΔW is negative because the gas does work on the atmosphere, rather than having work done on itself. Mark: 2/2

Question 3

The pendulum bob on a large clock has a mass of 0.75 kg and oscillates with simple harmonic motion. It has a period of 2.0 s and an amplitude of 12 cm.

(a) Calculate the maximum restoring force on the pendulum bob. [2]

(b) (i) Calculate the maximum kinetic energy of the bob. [3]

(ii) State the maximum potential energy of the bob. [1]

(c) If the clock is not wound up the oscillation of the pendulum is lightly damped.

(i) Explain what is meant by 'lightly damped'. [1]

(ii) Draw a graph on the grid to show the oscillation of this lightly damped oscillation. [2]

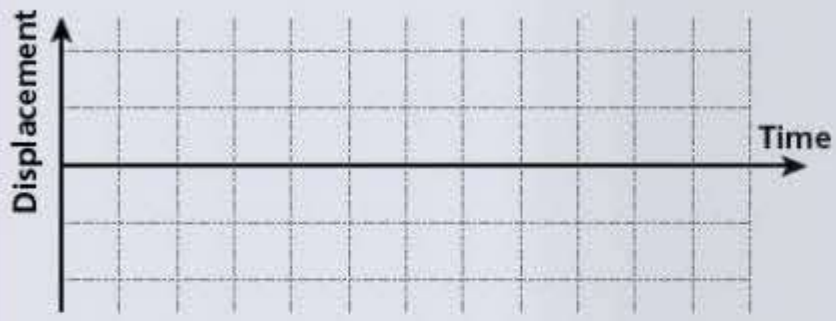

[Total: 9]

Answer A

(a) $F = m\omega^2 r$

$F = 0.75 \times \pi^2 \times 12 = 89$ N ✓✗

The working is reasonably clear and gets the nearly correct answer, although it is not quite clear where the π^2 comes from (it is ω^2). Unfortunately, in the equation, the amplitude is not converted into metres. Mark: 1/2

Answer A

(b) (i) maximum speed $= \omega r = \pi \times 12 = 38\,cm\,s^{-1}$ ✓

$E_k = \frac{1}{2}mv^2 = 0.5 \times 0.75 \times 38^2 = 542$ J ✓✓

(ii) $mgh = ?$ ✗

This is a repeated error, only this time not converting $cm\,s^{-1}$ into $m\,s^{-1}$. This is not penalised a second time, although the student should have realised that the answer obtained is far too large. The next part is not answered because the student does not understand that the kinetic energy and the potential energy add to give the total energy, which remains constant. Mark: 2/4

Answer A

(c) Its amplitude is decreasing. ✗

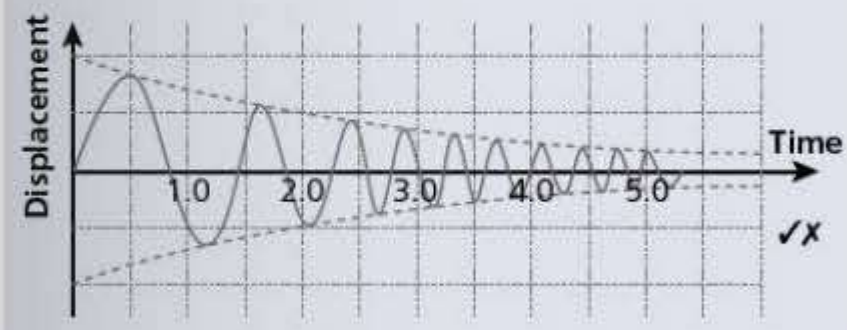

There is some understanding of light damping but the graph is poor. Although the envelope is correct, the question asks for a graph of this particular motion, which indicates some values are needed — in this case the period. The student does not show the period as 2 s but reduces the period as the amplitude decreases. Mark: 1/3

Answer B

(a) $F = -m\omega^2 r$

$\omega = \frac{2\pi}{T} = \frac{2\pi}{2} = \pi$

$F = -0.75 \times \pi^2 \times 0.12 = -0.89\,\text{N}$ ✓✓

There is clear working here to arrive at the correct answer, with the understanding that the maximum restoring force is at maximum displacement. The inclusion of the minus sign, while not an absolute requirement, shows an appreciation that the force is a restoring force. Mark: 2/2

Answer B

(b) (i) maximum speed $= \omega r = \pi \times 0.12 = 0.38\,\text{m s}^{-1}$ ✓

$E_k = \frac{1}{2}mv^2 = 0.5 \times 0.75 \times 0.38^2 = 0.054\,\text{J}$ ✓✓

(ii) 0.054 J ✓

Once more there is clear working leading to the correct answer, and then a clear understanding that the kinetic energy is converted to potential energy. Mark: 4/4

Answer B

(c) It is having to do work against something like friction, so it gradually loses energy and the amplitude decreases slowly. ✓

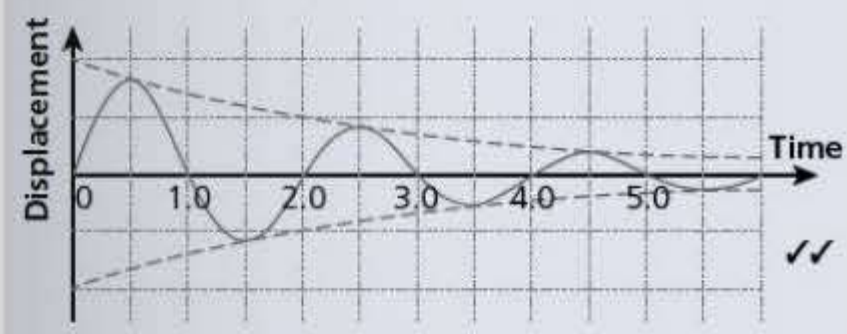

The answer shows a clear understanding of damping and the diagram confirms an understanding of light damping. The correct (and constant) period is pleasing. Mark: 3/3

Question 4

(a) When a signal is sent along a cable it is attenuated. Explain what is meant by the term *attenuation*. [1]

(b) Explain the causes of attenuation in:

(i) a fibre-optic cable [1]

(ii) a coaxial cable [2]

(c) A cable of total length 50 km has an attenuation per unit length of 5.2 dB km^{-1}. Eight repeater amplifiers are connected into the cable, each with a gain of 32 dB. A signal of input power of 600 mW is transmitted along the cable. Calculate:

(i) the attenuation caused by the cable alone [1]

(ii) the total gain from the amplifiers [1]

(iii) the power of the signal after transmission [3]

[Total: 9]

Answer A

(a) Attenuation is the reduction in the magnitude of a signal as it travels along a cable. ✗

The student has some idea of attenuation but the term 'magnitude' is too vague here. Acceptable terms would be power, voltage, amplitude, energy. Mark: 0/1

Answer A

(b) (i) Some of the signal is scattered in the glass. ✓

(ii) Heating of the cable as the current goes through. ✓✗

The student has got the idea that the radiation is scattered but has not gone into detail. Nevertheless, there is just about enough for the mark. There is only one point made in the second part but it is made quite well and deserves the mark. Mark: 2/3

Answer A

(c) (i) signal attenuation $= 50 \times 5.2 = 260\,\text{dB}$ ✓

(ii) gain $= 32 \times 8 = 256\,\text{dB}$ ✓

(iii) net loss $= 260 - 256 = 4\,\text{dB}$ ✓

$-4 = 10 \ln \frac{P_{out}}{P_{in}}$

$e^{-0.4} = \frac{P_{out}}{600}$ ✓

$P_{out} = 402 \approx 400\,\text{mW}$ ✗

This is fine until the last stage, where the student uses natural logarithms, rather than logarithms to the base 10. Notice how the student calculates the net loss along the cable, and correctly puts this in as a negative quantity in the equation. Enough has been done to gain a compensation mark. Mark: 4/5

Answer B

(a) Attenuation is the reduction in the power of a signal as it travels along a cable. ✓

This is a correct description of attenuation. Mark: 1/1

Answer B

(b) (i) The light/infrared radiation that carries the information is scattered by impurities in the glass. ✓

(ii) There is a current in the copper cable. Hence there is heating due to the electrical resistance of the copper ✓. Energy is also radiated away as the cable acts like an aerial with the varying current in it ✓.

There are three good points here, all expressed clearly and well explained. Mark: 3/3

Answer B

(c) (i) signal attenuation = 50 × 5.2 = 260 dB ✓

(ii) gain = 32 × 8 = 256 dB ✓

(iii) net gain = 256 − 260 = −4 dB ✓

$-4 = 10\lg\frac{P_{out}}{P_{in}}$ ✓

$10^{-0.4} = \frac{P_{out}}{600}$

$P_{out} = 239 \approx 240\,\text{mW}$ ✓

The student has worked through the calculation correctly, showing understanding of attenuation and gain (when measured in decibels). Unlike in answer A, the net gain is calculated, which automatically comes up as a negative figure. Mark: 5/5

Question 5

The spherical dome on a van de Graaff generator is placed near an earthed metal plate.

Consider the dome as an isolated sphere with all its charge concentrated at its centre.

(a) The dome has a diameter of 50 cm and the potential at its surface is 65 kV.

(i) Calculate the charge on the dome. [2]

(ii) Calculate the capacitance of the dome. [1]

The metal plate is moved slowly towards the dome and it partially discharges through the plate, leaving the dome with a potential of 12 kV.

(b) Calculate the energy that is dissipated during the discharge. [4]

[Total: 7]

Answer A

(a) (i) $V = \frac{1}{4\pi\varepsilon_0} \times \frac{Q}{r}$

$65 \times 10^3 = \frac{1}{4\pi \times 8.85 \times 10^{-12}} \times \frac{Q}{0.5}$

$Q = 3.6 \times 10^{-6}\,\text{C}$ ✓✗

(ii) $C = \frac{Q}{V} = \frac{3.60 \times 10^{-6}}{65 \times 10^3} = 5.5 \times 10^{-11}\,\text{F}$ ✓ (e.c.f.)

This is a reasonable effort. It is correct apart from the diameter (0.5 m), rather than the radius (0.25 m), of the dome being used. Mark: 2/3

Answer A

(b) change in voltage = 55 kV, therefore:

change in energy = ½QV = $0.5 \times 3.60 \times 10^{-6} \times (65 - 12) \times 10^3$

$= 9.5 \times 10^{-2}\,\text{J}$ ✓✗✗✗

The student is taking the energy to vary linearly with the voltage — it varies with voltage squared. The easiest way of calculating the discharge energy is to find both the energy before and the energy after discharge. Then work out the difference between them. A compensation mark is given for the use of the formula ½QV. Mark: 1/4

Answer B

(a) (i) $V = \frac{1}{4\pi\varepsilon_0} \times \frac{Q}{r}$

$65 \times 10^3 = \frac{1}{4\pi \times 8.85 \times 10^{-12}} \times \frac{Q}{0.25}$

$Q = 1.80 \times 10^{-6}\,\text{C}$ ✓✓

(ii) $C = \frac{Q}{V} = \frac{1.80 \times 10^{-6}}{65 \times 10^3} = 2.8 \times 10^{-11}\,\text{F}$ ✓

These are good, clear calculations, resulting in the correct answers. Mark: 3/3

Answer B

(b) energy before discharge = ½QV

$= 0.5 \times 1.80 \times 10^{-6} \times 65 \times 10^3 = 5.9 \times 10^{-2}\,\text{J}$ ✓✓

energy after discharge = ½CV²

$= 0.5 \times 2.8 \times 10^{-11} \times (12 \times 10^3)^2 = 2.0 \times 10^{-3}\,\text{J}$ ✓

energy dissipated = $(5.9 - 0.2) \times 10^{-2}\,\text{J} = 5.7 \times 10^{-2}\,\text{J}$ ✓

The problem is tackled in a logical manner and the working is once more easy to follow. Mark: 4/4

Question 6

(a) (i) Explain what is meant by negative feedback in an amplifier. [2]

(ii) State two advantages of having negative feedback with an operating amplifier. [2]

(b) The circuit diagram shows an operational amplifier as an inverting amplifier.

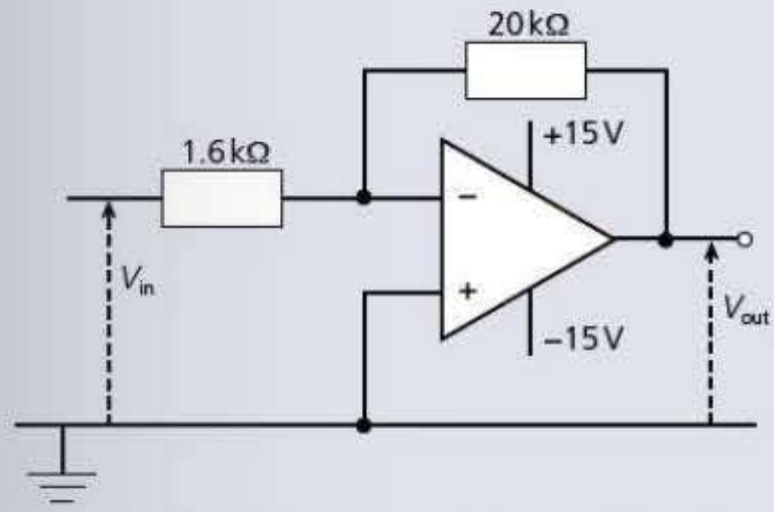

Calculate the voltage output when the input voltage is:

(i) 0.60 V [2]

(ii) 1.8 V [1]

(c) An operational amplifier is used as a comparator to switch a 2 kW heater on when the temperature falls below a specified temperature.

Explain, with the aid of a diagram, how the output from the operational amplifier could be used to switch on the heater. You do not need to draw the op-amp circuit. [4]

[Total: 11]

Answer A

(a) (i) Some of the output is fed back to the input. ✗✗

The student has some idea of feedback but does not refer to its negative aspect. The use of the term 'fed back' to describe feedback is not wise, as it paraphrases the question. The benefit of the doubt is not given. Mark: 0/2

Answer A

(ii) There is less distortion due to the op-amp saturating ✓. There is a wider frequency range ✗.

The first point is correct but the second part is unclear. Does it mean that there is a wider bandwidth or that there is more consistent amplification over a wider frequency range? Mark: 1/2

Answer A

(b) (i) gain $= \frac{R_f}{R_{in}} = \frac{20}{1.6} = 12.5$ ✗

$V_{out} = AV_{in} = 12.5 \times 0.6 = 7.5\,V$ ✓ (e.c.f.)

(ii) $V_{out} = AV_{in} = 12.5 \times 1.8 = 22.5\,V$ ✗

The student misses the idea of the inverting amplifier and gives the gain as a positive number. This feeds through the answers. The fact that the amplifier saturates when the input voltage is 1.8 V is not recognised. Mark: 1/3

Answer A

(c)

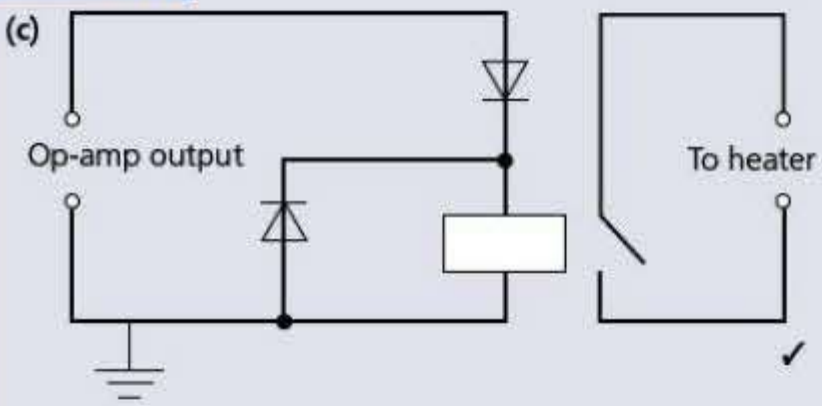

The heater would require a larger power input than the op-amp can supply ✓. A relay is used to switch the heater, which is run from a high-power circuit. The diodes are used to protect the op-amp ✓.

This is quite good. A little more detail on how the diodes protect the operational amplifier would make the answer excellent. Mark: 3/4

Answer B

(a) (i) Some of the output that is out of phase with the input is returned to the input. ✓✓

This is a good, succinct answer that includes the negative nature of the feedback. Mark: 2/2

Answer B

(b) (ii) There is a more consistent gain over a wider range of frequencies and there is less distortion due to the op-amp saturating. ✓✓

This is a fully correct answer, which includes both the relevant points. Mark: 2/2

Answer B

(b) (i) gain $= \frac{-R_f}{R_{in}} = \frac{-20}{1.6} = -12.5$ ✓

$V_{out} = AV_{in} = -12.5 \times 0.6 = -7.5\,V$ ✓

(ii) $V_{out} = AV_{in} = -12.5 \times 1.8 = -22.5\,V$

But the supply voltage is ±15 V, so the op-amp saturates and the output is −15 V. ✓

This fully correct answer scores full marks. Mark: 3/3

Answer B

(c)

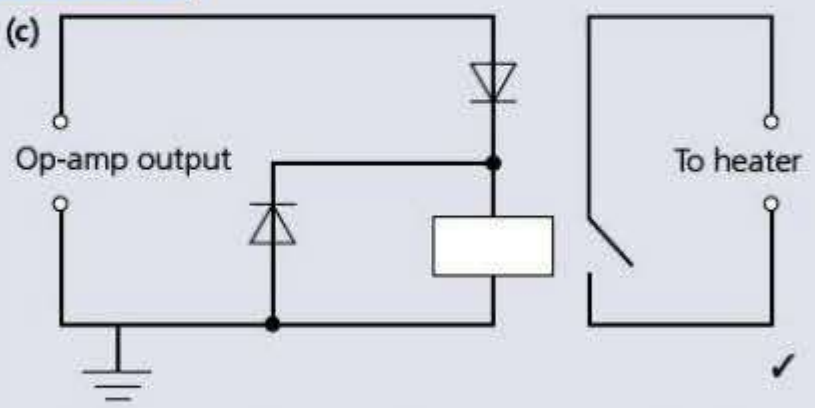

The heater would require a larger power input than the op-amp can supply ✓. A relay is used to switch the heater, which is run from a separate high-power circuit. The diodes are used to protect the op-amp ✓ because a large back e.m.f. is induced across the ends of the relay coil when it opens ✓.

This full answer explains why the diodes are necessary. The student might have gone on to explain the logic of how the diodes protect the op-amp. A mark has been awarded for the correct diagram. However, there are only 4 marks for this part-question and three further relevant points have been made already. Mark: 4/4

Question 7

(a) State Faraday's law of electromagnetic induction. [2]

(b) An aeroplane is flying at a steady altitude in a direction perpendicular to the Earth's magnetic axis. The Earth's magnetic field has a flux density of 34 μT and it makes an angle of 60° with the Earth's surface. The wingspan of the aeroplane is 42 m and it is travelling at a speed of 180 m s^{-1}.

(i) Calculate the e.m.f. induced across the wings of the aeroplane. [3]

(ii) Explain why this e.m.f. could not drive a current through a conductor connected across the wingtips of the aeroplane. [1]

(iii) State and explain the effect on the e.m.f. across the wingtips if the aeroplane were travelling parallel to the Earth's magnetic axis. [2]

[Total: 8]

Answer A

(a) An induced e.m.f. is equal to the rate of cutting magnetic flux. ✓✓

The student has some concept of Faraday's law. The idea of cutting flux is a useful model, although it could be argued that it excludes a change in flux density. Another fault is that it does not include the idea of flux linkage, which includes the number of turns in a coil. This definition only really caters for a single wire in the field. Nevertheless, the examiner has given the student the benefit of the doubt. Mark: 2/2

Answer A

(b) (i) $E = BA\sin\theta$

$E = 34 \times 10^{-6} \times 180 \times 42 \times \sin 30 = 0.13\,\text{V}$ ✓✗✗

This is not explained well. The student has worked out the area swept out by multiplying the speed by the wingspan but has used the incorrect angle. It is the vertical component that induces the e.m.f. across the wings, not the horizontal component. 1/3

Answer A

(ii) The voltage is too small to drive a meaningful current. ✗

The student has not spotted the fact that the conductor would have to move along with the aeroplane. Mark: 0/1

Answer A

(iii) There would be no voltage as the aeroplane would be flying parallel to the flux. ✗✗

It is the vertical component of the field that induces an e.m.f. across the wings. The horizontal component would induce an e.m.f. between the top and the bottom of the aeroplane. Mark: 0/2

Answer B

(a) The magnitude of an induced e.m.f. is equal to the rate of change of magnetic flux linkage. ✓✓

This is a textbook definition that includes all the relevant points. Mark: 2/2

Answer B

(b) (i) $E = \frac{-\Delta\phi}{\Delta t} = \frac{\Delta A}{\Delta t} B\sin\theta$

area swept out per unit time = $Lv = 42 \times 180$
$= 7560\,\text{m}^2\,\text{s}^{-1}$ ✓

vertical component of the flux induces this e.m.f.
$= B\sin 60$ ✓

$E = 7560 \times 34 \times 10^{-6} \times \sin 60 = 0.22\,\text{V}$ ✓

This is done well. The student shows each stage of the calculation clearly. Mark: 3/3

Answer B

(b) (ii) The conductor would also travel through the magnetic field and therefore have the same e.m.f. induced across it. ✓

This is a good answer. Mark: 1/1

Answer B

(b) (iii) There would be no change ✓. It is the vertical component that induces the field across the wing ✓.

The student has spotted the important factor and explained it concisely. Mark: 2/2

Question 8

(a) Electrons are accelerated through a potential difference of 4.8 keV. Calculate the velocity of the electrons. [3]

In a different experiment, electrons travelling at a speed of $2.8 \times 10^7\,m\,s^{-1}$ enter a uniform magnetic field perpendicularly to the field. The magnetic field has a flux density 4.0 mT.

(b) (i) Explain why the electrons travel in a circular path in the magnetic field. [2]

(ii) Calculate the magnitude of the force on the electrons due to the magnetic field. [2]

(iii) Calculate the radius of the circular path of the electrons. [2]

(c) As the electrons travel through the field they gradually lose energy. State and explain the effect of this on the radius of the path. [2]

[Total: 11]

Answer A

(a) energy $= eV = 1.6 \times 10^{-19} \times 4.8 = 7.68 \times 10^{-19}$ J ✗

$7.68 \times 10^{-19} = 0.5 \times 9.1 \times 10^{-31} \times v^2$

$v = \sqrt{\dfrac{7.68 \times 10^{-19}}{0.5 \times 9.1 \times 10^{-31}}} = 1.3 \times 10^6\,m\,s^{-1}$ ✓✓ (e.c.f.)

This is a good effort, although the student forgot to change kilovolts to volts. The work is set out reasonably well, although it would be improved by including the expression for kinetic energy. Nevertheless, it is easy to spot the mistake, so only 1 mark is lost. Mark: 2/3

Answer A

(b) (i) The force is at right angles to the velocity ✓, so the motion is circular.

The student scores the first mark for recognising that the force is at right angles to the velocity but does not develop the argument. Mark: 1/2

Answer A

(ii) $F = Bqv = 4.0 \times 10^{-3} \times 1.6 \times 10^{-19} \times 2.8 \times 10^7$
$= 1.79 \times 10^{-14}$ N ✓✓

This part is done well and scores both marks. Mark: 2/2

Answer A

(iii) $F = \dfrac{\frac{1}{2}mv^2}{r}$ ✗

$1.79 \times 10^{-14} = \frac{1}{2} \times 9.1 \times 10^{-31} \times \dfrac{(2.8 \times 10^7)^2}{r}$

$r = \frac{1}{2} \times 9.1 \times 10^{-31} \times \dfrac{(2.8 \times 10^7)^2}{1.79 \times 10^{-14}} = 1.99 \times 10^{-2}$ m ✗

The formula is wrong. The student has added in a '½', as if it were kinetic energy. This is a serious error, showing a failure to understand the physics, so both marks are lost. Mark: 0/2

Answer A

(c) The radius is reduced ✓ because it decreases when the velocity decreases ✗.

The student recognises that the radius decreases — perhaps the result is remembered from the experiment being carried out during the course. However, the reasoning simply repeats what has been said already. Mark: 1/2

Answer B

(a) energy of the electrons $= eV = 1.6 \times 10^{-19} \times 4.8 \times 10^3$
$= 7.68 \times 10^{-16}$ J

$E_k = \frac{1}{2}mv^2$

$7.68 \times 10^{-16} = 0.5 \times 9.1 \times 10^{-31} \times v^2$

$v = \sqrt{\dfrac{7.68 \times 10^{-16}}{0.5 \times 9.1 \times 10^{-31}}} = 4.1 \times 10^7\,m\,s^{-1}$
$= 4.1 \times 10^7\,m\,s^{-1}$ ✓✓✓

This is a clear, well set out and correct calculation. Mark: 3/3

Answer B

(b) (i) The force is at right angles to the velocity of the electrons, so there is no change in the magnitude of the velocity. As the direction of the velocity changes, so does the force direction, always remaining at right angles to the velocity. The magnitude of the velocity remains constant. ✓✓

This excellent description takes the argument further than answer A, explaining how the direction of the force changes continuously as the velocity direction changes. Mark: 2/2

Answer B

(b) (ii) $F = Bev = 4.0 \times 10^{-3} \times 1.6 \times 10^{-19} \times 2.8 \times 10^7$
$= 1.79 \times 10^{-14}$ N ✓✓

This shows good, clear use of the equation for the force on a charged particle in a magnetic field. The student uses e for the charge, because it is the charge on an electron. Mark: 2/2

Answer B

(b) (iii) $F = \frac{mv^2}{r}$

$$1.79 \times 10^{-14} = 9.1 \times 10^{-31} \times \frac{(2.8 \times 10^7)^2}{r} \checkmark$$

$$r = 9.1 \times 10^{-31} \times \frac{(2.8 \times 10^7)^2}{1.79 \times 10^{-14}} = 3.98 \times 10^{-2}\,\text{m} \checkmark$$

This is clear use of the equation for circular motion. Mark: 2/2

Answer B

(c) The radius is reduced because the velocity falls. The centripetal force is equal to $Bqv = mv^2/r$, thus $r = mv/Bq$. B, q and m are unchanged, so r is proportional to v. ✓✓

This is a well-reasoned argument. Mark: 2/2

Question 9

The Planck constant links both the wave–particle duality of matter and of electromagnetic radiation.

(a) State the equations that show this duality. [2]

(b) Describe the photoelectric effect and explain why it gives evidence for the wave–particle duality of electromagnetic radiation. [4]

(c) (i) Aluminium has a work function energy of 6.52×10^{-19} J. Calculate the maximum kinetic energy with which an electron can be emitted from this metal when electromagnetic radiation of wavelength, 1.80×10^{-7} m falls on its surface. [3]

(ii) State which part of the electromagnet spectrum this radiation is in. [1]

[Total: 10]

Answer A

(a) $E = hc/\lambda$

$\lambda = h/p$ ✓✗

The equations are correct. However, the student has not explained what the symbols mean, so a mark is lost. Mark: 1/2

Answer A

(b) The photoelectric effect is the emission of electrons from a metal surface when light falls on it ✗. There is a minimum frequency at which electrons are emitted. If light were waves there would be no minimum ✓, so light comes in packets of energy called photons ✗✗.

This is not a good description. The photoelectric effect is not just about visible light but about all electromagnetic radiation, so the first mark is lost. The student has some idea of the reasoning but does not explore it very deeply. The comment regarding photons is correct but not really relevant to the argument and requires more development. Mark: 1/4

Answer A

(c) (i) $E = \frac{hc}{\lambda} = 6.63 \times 10^{-34} \times \frac{3 \times 10^8}{1.8 \times 10^{-7}} = 1.105 \times 10^{-18}$ ✓

energy of the photon = E_k + work function

$= 1.105 \times 10^{-18} + 6.52 \times 10^{-19} = 1.76 \times 10^{-19}$ J ✗✗

The student starts off well, calculating the energy of the photon and then correctly writing down the equation. However, not enough care has been taken in rearranging the equation. Mark: 1/3

Answer A

(ii) X-rays ✗

You need to know the rough boundaries of the parts of the electromagnetic spectrum. This radiation is well into the ultraviolet. Mark: 0/1

Answer B

(a) $E = hf$, where h = the Planck constant, E = the photon energy and f = the frequency of the radiation. ✓

$\lambda = h/p$, where λ is the electron wavelength, h is the Planck constant and p is the momentum of the electron. ✓

Both are correct. The equation for electromagnetic radiation can be used with either frequency or wavelength. The symbols used are explained clearly. Mark: 2/2

Answer B

(b) The photoelectric effect is the emission of electrons from a metal surface when electromagnetic radiation falls on it ✓. If electromagnetic radiation were purely wave-like in nature then radiation of all frequencies would cause the effect ✓. However, there is a minimum frequency radiation, which is different for all metals, below which no electrons are emitted ✓. This is called the threshold frequency. The electrons are emitted immediately radiation above the threshold frequency falls on the metal. There is no wait for the continuous wave to supply enough energy ✓.

This is an excellent description. The effect is described correctly and the points are made clearly. The answer is much deeper than answer A. The immediate emission of electrons is explored and there is discussion of the why the pure wave model does not work. Mark: 4/4

Answer B

(c) (i) $E = \frac{hc}{\lambda} = 6.63 \times 10^{-34} \times \frac{3 \times 10^8}{1.8 \times 10^{-7}} = 1.105 \times 10^{-18}$ J ✓

E_k = energy of the photon − work function
$= (11.05 - 6.52) \times 10^{-19} = 4.53 \times 10^{-19}$ J ✓✓

This is worked through well. Mark: 3/3

Answer B

(b) (ii) Visible light ✗

This is a rare error. The range of wavelength of visible radiation is from about 4×10^{-7} m (violet) to 7×10^{-7} m (red). Mark: 0/1

Question 10

(a) Describe the differences between the production of a CT-scan image and the production of a traditional X-ray image. [6]

(b) (i) Describe the advantages of an NMRI scan compared with a CT scan. [2]

(ii) Explain why it is sometimes useful to produce a combined image from a CT scan and an MRI scan. [2]

[Total: 10]

Answer A

(a) An X-ray image is a two-dimensional image formed by shining a beam of X-rays onto a photographic plate. CT scanning produces a three-dimensional image ✓ by making images of many slices ✓.

This is a reasonable answer, which, with a little more detail, could have scored more marks. The student understands the process of taking the X-ray image but should describe it as a 'shadow image', rather than as a two-dimensional image. There is no description of how the X-ray image is formed. The description of the CT image lacks detail and so does not gain full credit. Mark: 2/6

Answer A

(b) (i) CT scans do not give as good contrast with fleshy tissues as MRI scans ✓. MRI scans cannot be used with people who have metallic replacement parts in their bodies ✗.

The question has been answered as a disadvantage of CT scans but the point made is relevant and well worth a mark. The comment regarding the metallic replacement parts is irrelevant — if anything, this is a disadvantage of the MRI-scanning procedure, not an advantage. Mark: 1/2

Answer A

(ii) The combination gives doctors the best results from both methods and gives them more information. ✗✗

The student has said nothing relevant here. What are the best results from each? Mark: 0/2

Answer B

(a) An X-ray image is a shadow image ✓ caused by the differing absorption ✓ of the different body tissues as a single beam of X-rays is passed through the patient. In a CT scan the patient is in the centre of a ring and the X-ray source rotates around the patient, taking a series of images through a slice ✓. The information gained is sent to a computer, which builds up a picture of the slice ✓. The patient is moved slowly through the machine so that this is repeated to make images of many slices ✓. These images are then put together by the computer to form a three-dimensional image, which can be viewed from different angles ✓.

This is an excellent answer that covers almost all the points. A comparison between the two-dimensional nature of a traditional X-ray image and the three-dimensional image from CT scanning is the only extra point that might have been included. Nevertheless there is enough here to gain full marks. Mark: 6/6

Answer B

(b) (i) MRI scans do not rely on ionising radiation, unlike CT scans ✓. This makes it safer for both patient and medical staff. MRI scans give a better contrast between soft tissues than CT scans ✓.

This excellent answer highlights two quite different advantages. Mark: 2/2

Answer B

(b) (ii) While MRI scans give a better contrast between soft tissues ✓, CT scans give better contrast with bony tissue ✓. The combination allows the doctors to relate the soft tissue to the bony tissue.

Once more the student shows a clear understanding of the situation. Mark: 2/2

Question 11

(a) For nuclear fusion to occur, temperatures in the region of 1 million degrees kelvin are required. Explain why such a high temperature is needed. [2]

(b) One form of nuclear fusion in stars is known as the proton–proton chain. In this chain a total of six protons combine to form an alpha particle. In addition to the formation of the alpha particle, two protons and two positrons are released. Calculate the energy, in joules, released in the proton–proton chain. [4]
(mass of an alpha particle = 6.64424×10^{-27} kg; mass of a proton = 1.67261×10^{-27} kg; mass of a positron = 9.1×10^{-31} kg)

[Total: 6]

Answer A

(a) The very large electrostatic repulsion between nuclei as they approach to within fusion distances means they must have a very high speed. ✓✗

The student has the basic idea but does not go on to explain the link between mean velocity of the particles and temperature. Mark: 1/2

Answer A

(b) 10.03566×10^{-27} kg ✓

mass of products = $6.64424 \times 10^{-27} + (2 \times 9.1 \times 10^{-31}) = 6.64606 \times 10^{-27}$ kg ✗

mass lost = $(10.03566 - 6.64606) \times 10^{-27} = 3.3896 \times 10^{-27}$ kg ✓ (e.c.f.)

$E = mc^2 = 3.3896 \times 10^{-27} \times (3.0 \times 10^8)^2 = 3.05 \times 10^{-10}$ J ✓

This is a good effort. Unfortunately, the two protons released in the process have been missed. Apart from that omission, the answer shows a clear understanding of the physics. Error carried forward (e.c.f.) means that only 1 mark is lost. Mark: 3/4

Answer B

(a) The very large electrostatic repulsion between nuclei as they approach to within fusion distances means they must travel at very high speed ✓. Temperature is proportional to the mean square speed ✓.

This excellent answer takes the argument a step further than answer A. Mark: 2/2

Answer B

(b) net number of protons = 4

mass of four protons = 4 × initial mass of protons
$= 4 \times 1.67261 \times 10^{-27} = 6.69044 \times 10^{-27}$ kg ✓

mass of products = $6.64424 \times 10^{-27} + (2 \times 9.1 \times 10^{-31})$
$= 6.64606 \times 10^{-27}$ kg ✓

mass lost = $(6.69044 - 6.64606) \times 10^{-27}$
$= 0.04438 \times 10^{-27}$ kg ✓

$E = mc^2 = 0.04438 \times 10^{-27} \times (3.0 \times 10^8)^2 = 3.99 \times 10^{-12}$ J ✓

This is worked through in a logical way, with all the steps shown clearly. Mark: 4/4

Now test yourself answers

AS topics

1 Physical quantities and units

1 time
2 kilogram, kelvin
3 $kg\,m^2\,s^{-3}\,A^{-1}$
4 $p \rightarrow N\,m^{-2} \rightarrow kg\,m^{-1}\,s^{-2}$; $\rho gh \rightarrow (kg\,m^{-3})\,(m\,s^{-2})\,(m) \rightarrow kg\,m^{-1}\,s^{-2}$
5 1.0×10^9
6 1.0×10^{-9}

2 Measurement techniques

1 3.83 cm
2 2.02 mm
3 12.5 μs
4 0.035 V

3 Kinematics

1 Similarity: both have the same dimensions or same units. Difference: velocity has direction (or is a vector); speed does not have direction (is a scalar).
2 $2.8\,m\,s^{-2}$ (2.75)
3 $1.7\,m\,s^{-2}$
4 **a** Parabolic or initially horizontal curving downwards towards the Earth.
b **i** 0.49 s
ii 140 m (139)
iii Air resistance negligible in the vertical direction; significant in the horizontal direction, reducing flight length.

4 Dynamics

1 weight (downwards), upthrust/buoyancy (upwards), friction (upwards); resultant force = 0
2 **a** $2.9\,m\,s^{-2}$ **b** 3.4×10^3 N **c** $2.16 \times 10^4\,kg\,m\,s^{-1}$
3 **a** $5\,m\,s^{-1}$
b E_k before collision = 21 J; E_k after collision = 8.1 J; inelastic
4 **a** $11.0\,kg\,m\,s^{-1}$ **b** $9.3\,kg\,m\,s^{-1}$

5 Forces, density and pressure

1 2.8 N
2 19.2 N cm
3 0.16 kg
4 3.46 N
5 6.67×10^4 Pa

6 Work, energy and power

1 **a** 100 J **b** 50 J **c** 50 J
2 **a** 73.5 J **b** 48.6 J **c** 24.9 J
3 1.88×10^3 N

7 Deformation of solids

1 **a** $37.5\,N\,m^{-1}$
b 1200 J
2 $3.8 \times 10^9\,N\,m^{-2}$
3 6.4×10^{-3}
4 0.071 m

8 Waves

1 **a** 5.91×10^{-7} m
b orange/yellow
2 125 Hz
3 $2.7 \times 10^7\,m\,s^{-1}$

9 Superposition

1 $304\,m\,s^{-1}$
2 3.45×10^{-4} m
3 4.0×10^{-7} m

10 Electric fields

1 2.24×10^{-15} N
2 $2.5 \times 10^5\,V\,m^{-1}$ (or $N\,C^{-1}$)
3 **a** No change **b** Doubled

11 Current of electricity

1 **a** 1.5 A **b** 9.0 W **c** 1350 C **d** 8100 J
2 $9.1 \times 10^{24}\,m^{-3}$
3 **a** 960 Ω **b** 43.6 m

12 D.C. circuits

1 −0.6 A. The minus sign shows that the current is away from the junction.
2 $6.0 - (1.6I - 4.8I) = 0 \rightarrow I = \frac{6.0}{6.4} = 0.94$ A
3 6.45 V

13 Particle and nuclear physics

1 Significant amount of two isotopes present (Cl-35 and Cl-37)
2 79 protons, 118 neutrons
3 **a** 0 **b** −1
4 **a** Proton changes to a neutron, thus an up quark changes to a down quark with the emission of a positron (a β^+) and a neutrino.
b charge on up quark = ⅔e, down quark = −⅓e, β^+ = +e, charge on neutrino = 0
charge before change = ⅔e
charge after change = −⅓e + e + 0 = ⅔e, hence charge is conserved.

A level topics

14 Motion in a circle

1 2.1 rad
2 30°
3 **a** $0.6\,rad\,s^{-1}$
b 7200 N

15 Gravitational fields

1 2.0×10^{20} N
2 $2.8 \times 10^6\,J\,kg^{-1}$
3 $2.4 \times 10^3\,m\,s^{-1}$
4 7100 s (2.0 hours)

16 Ideal gases

1 $820\,cm^3$
2 **a** 2.9 mol **b** 11.7 g
3 $495\,m\,s^{-1}$

17 Temperature

1 58°C, 331 K

18 Thermal properties of materials

1 410 J kg^{-1}

2 0.60 kg (don't forget that energy is needed to raise the temperature of the water to 100°C)

3 **a** 25 J **b** 125 J

4 The material will either expand or be compressed, so the potential energy of the molecules will either be reduced or increased accordingly.

19 Oscillations

1 1.0 s

2 **a** 0.25 cm s^{-1}

b 1.6×10^{-7} J

c 1.6×10^{-7} J

3 23.6 cm s^{-1}, 20.4 cm s^{-1}

4 Resonance is the large amplitude oscillation of an object caused by a driving oscillation of frequency equal to the natural frequency of oscillation of the driven object, or a multiple of the natural frequency.

20 Waves

1 **a** 3.0×10^6 Hz **b** 0.25 mm

2 **a** 1.4×10^6 kg m^{-2} s^{-1} **b** 9.2×10^{-4}

3 68%

21 Communication

1 **a** **i** 5% **ii** 5×10^{-5}%

b Transmissions in the microwave region have much wider bandwidths than those in the 'medium' waveband.

2 **a** 10001 **b** 41

3 **a** 63 **b** 0.095

4 32 W

22 Electric fields

1 5.8×10^{-13} N

2 8.0×10^4 N C^{-1}

3 24 kV

4 1.0×10^{-10} m

23 Capacitance

1 **a** 13.5 mF **b** 60 mJ

2 **a** 750 μF **b** 8400 μF

24 Current of electricity and D.C. circuits

1 2.5 Ω, assuming the diameter of the wire decreases

2 **a** 2.0 V **b** 5.6 V

25 Electronics

1 The change in the resistance of strain gauge is a small fraction of the original resistance. The op-amp can amplify this so that it is more significant.

2 Negative feedback increases the bandwidth, causes less distortion of the output signal and increases the stability of the output signal.

3 **a** 16 **b** −38.4 mV

26 Magnetic fields

1 6.5×10^{-3} N m^{-1}

2 3.2 A

a **i** 5.5×10^{-14} N **ii** 8.2×10^{12} m s^{-2}

b At right angles to both field and velocity.

27 Electromagnetic induction

1 **a** **i** 9.6×10^{-7} Wb **ii** 1.9×10^{-3} Wb

b 1.4×10^{-3} Wb

2 0.67 V

3 4.7×10^3 V

28 Alternating currents

1 1.7 A

2 68 V

3 30 W

4 1000 V

5 0.30 A

6 0.30 s

29 Quantum physics

1 3.4×10^{-19} J

2 5.0×10^{-16} J

3 8.9×10^{14} Hz

4 1.2×10^{-20} J

5 **a** 2.3×10^{-10} m

b The neutron's wavelength would be smaller than the electron's (by a factor of 17 000/8.9 = 1860), because the mass of the neutron is greater by the same factor.

6 83%

30 Particle and nuclear physics

1 **a** 4.86×10^{-29} kg **b** 4.38×10^{-12} J

2 $^{239}_{94}Pu + ^{1}_{0}n \rightarrow ^{240}_{94}Pu \rightarrow ^{150}_{60}Nd + ^{88}_{34}Se + 2^{1}_{0}n$

3 **a** 2.51×10^{-4} h^{-1} **b** 2762 h (115 days)