UGANDA NATIONAL EXAMINATIONS BOARD

Uganda Advanced Certificate of Education

PRACTICAL PHYSICS INSTRUCTIONS

P510/3/Inst. Sch.

November/December

CONFIDENTIAL

Great care should be taken that the information given below does not reach the candidates either directly or indirectly.

INSTRUCTIONS FOR PREPARING APPARATUS

The candidates will be instructed not to write out a detailed description of the apparatus. But the Teacher responsible for preparing the apparatus must give details (on the report form attached) about some of the items of apparatus he/she has supplied. The form should be signed by the invigilator, the Teacher responsible for preparing the apparatus and the Headteacher.

[N.B: The Headteacher must ensure that the teacher responsible for preparing the apparatus hands in his/her trial results properly sealed in a separate envelope and **firmly** fastened (attached) to the candidates' scripts envelope(s)].

© *2010 Uganda National Examinations Board* **Turn Over**

Scanned with CamScanner

In addition to the apparatus ordinarily contained in Physics laboratory, each candidate will require:

Question 1

1 piece of knitting thread 120 cm long.
1 piece knitting thread 25 cm long.
1 retort stand and clamp.
2 pieces of wood (about 4cm x 4cm x 2cm, each).
1 stop clock.
1 metre rule.
1 half metre rule (or second metre rule).
1 pendulum bob with a hook.

Question 2

1 vernier caliper.
1 glass block (about 11.2cm x 6.3cm x 1.8cm).
2 plain sheets of paper.
4 optical pins.
1 soft board.
4 drawing pins.
1 complete mathematical set.

Question 3

1 voltmeter (0 –3V).
1 ammeter (0–1A).
1 rheostat (0–50 Ω).
1 metre bridge.
1 centre zero galvanometer.

Constantan wire (SWG 26) 101 cm long with 40cm of it coiled on a piece of wool and covered using masking tape. Leave 1cm protruding at one end and 60 cm free as shown in the sketch below.

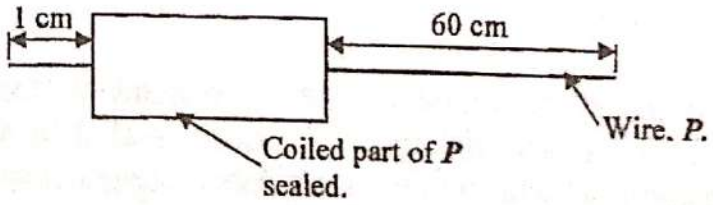

(Make sure the turns do not touch one another.)

2 fresh dry cells in separate cell holdings.
1 switch labelled **K**.
1 sliding contact (crocodile clip will do).
1 2.0 Ω resistor.
2 crocodile clips.
10 pieces of connecting wire, each about 50cm long.
1 metre rule.

Scanned with CamScanner

P510/3
PRACTICAL
PHYSICS
Paper 3
Nov./Dec. 2010
3 ¼ hours

UGANDA NATIONAL EXAMINATIONS BOARD

Uganda Advanced Certificate of Education

PRACTICAL PHYSICS

(PRINCIPAL SUBJECT)

Paper 3

3 hours 15 minutes

INSTRUCTIONS TO CANDIDATES:

Answer **Question 1** *and* **one** *other question.*

Candidates are not allowed to use the apparatu or write for the first fifteen minutes.

Graph paper is provided.

Mathematical tables and non-programmable scientific electronic calculator may be used.

Write on one side of the paper only.

Candidates are expected to record on their scripts all their observations as these observations are made and to plan the presentation of the records so that it is not necessary to make a fair copy of them. The working of the answers is to be handed in.

Details on the question paper should not be repeated in the answer, nor is the theory of the experiment required unless specifically asked for. Candidates should, however, record any special precautions they have taken and any particular feature of the method of going about the experiment.

Marks are given mainly for a clear record of the observations actually made, for their suitability and accuracy, and for the use made of them.

© 2010 Uganda National Examinations Board

Turn Over

Scanned with CamScanner

1. In this experiment, you will determine the acceleration due to gravity, g by two methods.

(34 marks)

METHOD I

(a) Tie the pendulum bob at the end of the long piece of thread provided.

(b) Suspend the pendulum bob as shown in figure 1 by clamping the end of the thread using two small pieces of wooden blocks, such that length $l = 0.900$m.

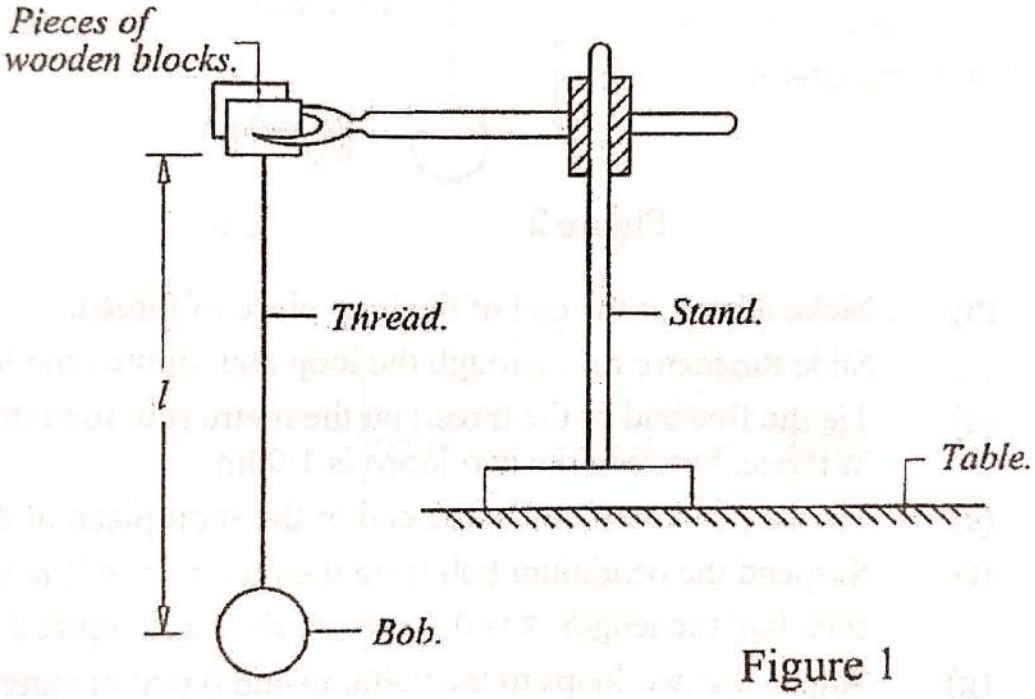

Figure 1

(c) Displace the bob slightly and release it to oscillate.

(d) Measure and record the time, t for 20 oscillations.

(e) Calculate period, T.

(f) Find the acceleration, g due to gravity from, $g = \dfrac{4\pi^2 l}{T^2}$.

(g) Dismantle the apparatus.

Scanned with CamScanner

METHOD II

(a) Clamp the metre rule horizontally so that its scale faces you.

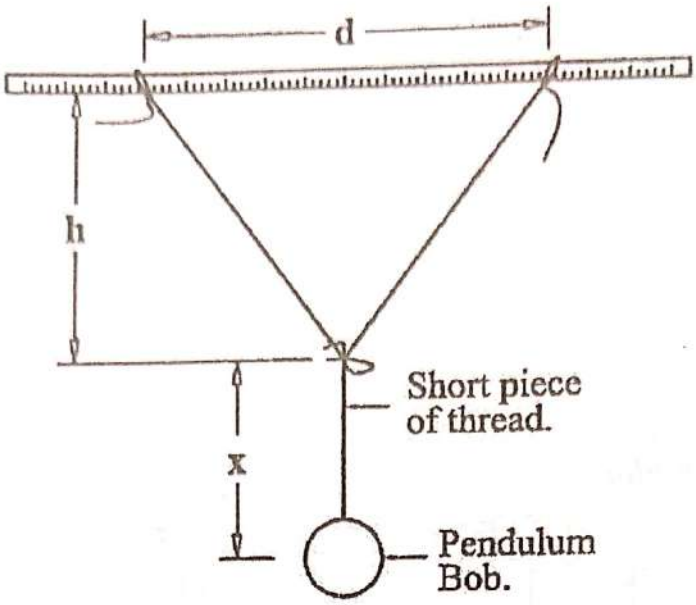

Figure 2

(b) Make a loop at the end of the long piece of thread.

(c) Slide the metre rule through the loop and tighten the loop.

(d) Tie the free end of the thread on the metre rule such that the length of thread between the two loops is 1.00m.

(e) Tie the pendulum bob at the end of the short piece of thread.

(f) Suspend the pendulum bob from the mid point of the looping thread such that the length, x is 0.200 m as shown in figure 2.

(g) Adjust the two loops to the 0.400 m and 0.600 m marks on the metre rule.

(h) Read the distance, d between the two marks.

(i) Measure and record the height, h in metres.

(j) Displace the bob slightly towards you and release it to oscillate.

(k) Measure and record the time, t, for 20 oscillations.

(l) Determine the period, T.

(m) Adjust the distance, d to 0.300m by moving each loop towards the end of the metre rule.

(n) Repeat procedures (i) to (l).

(o) Repeat procedures (i) to (l) for values of $d = 0.400, 0.500, 0.600$ and 0.700m.

(p) Tabulate your results including values of T^2.

Scanned with CamScanner

(q) Plot a graph of T^2 against h.

(r) Find the slope, w of the graph.

(s) Calculate acceleration, g due to gravity from, $g = \frac{4\pi^2}{w}$

DISMANTLE THE SET UP

2. In this experiment, you will determine the constant, S of the glass block provided using two methods. *(33 marks)*

METHOD 1

(a) Measure and record the length, l of the glass block.

(b) Draw a line on the plain sheet of paper.

(c) Place the glass block with the smallest area over the line.

(d) Hold a pin horizontally so that its pointed end is adjacent to the glass block as shown in figure 3.

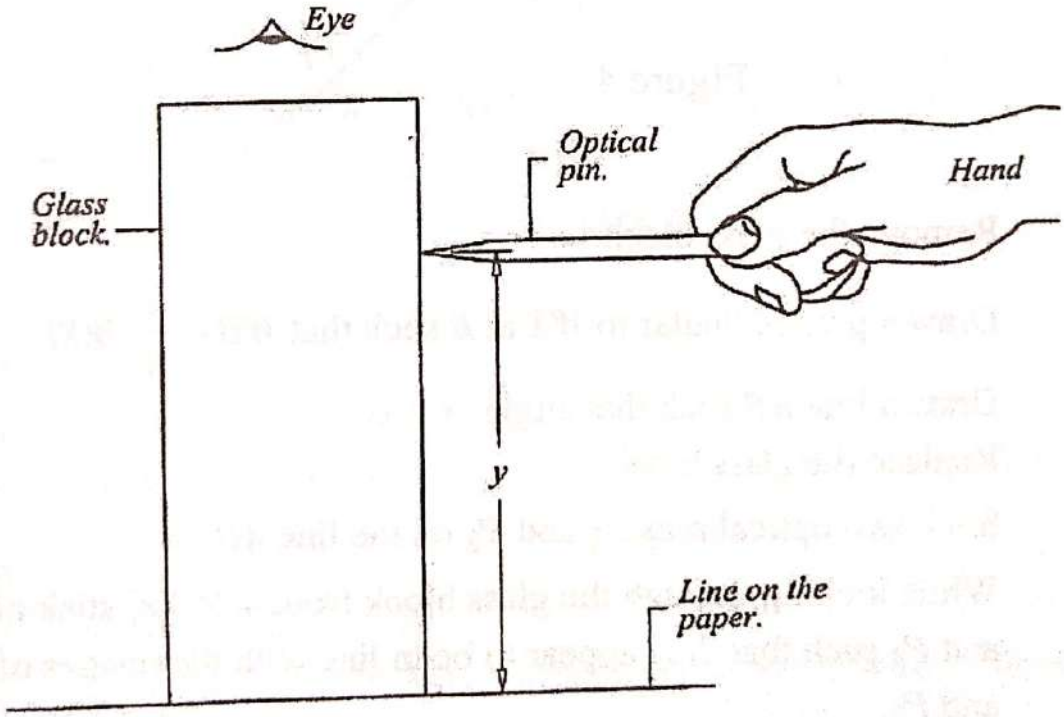

Figure 3

(e) Adjust the position of the optical pin until it appears to coincide with the image of the line as seen through the glass block.

(f) Measure and record the height, y of the pin from the line on the sheet of paper.

(g) Calculate the constant, S of the glass block from the expression

$$l = S(l - y)$$

Scanned with CamScanner

METHOD II

(a) Measure and record the width, b, of the glass block.

(b) Fix the plain sheet of paper on the soft board using drawing pins.

(c) Place the glass block in the middle of the plain sheet of paper with the largest face top most, and draw its outline XYZW as shown in figure 4.

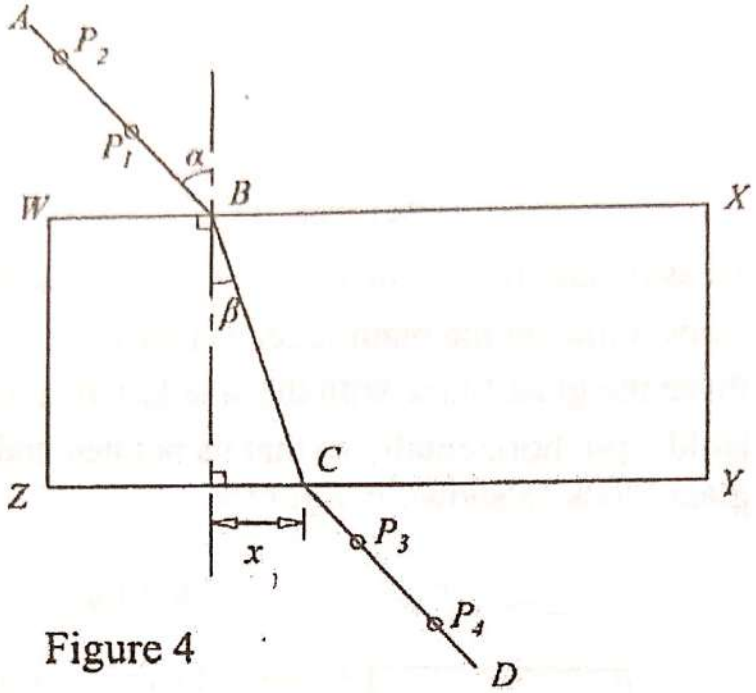

Figure 4

(d) Remove the glass block.

(e) Draw a perpendicular to WX at B such that $WB = \frac{1}{4}(WX)$.

(f) Draw a line AB such that angle $\alpha = 20^\circ$.

(g) Replace the glass block.

(h) Stick two optical pins P_1 and P_2 on the line AB.

(i) While looking through the glass block from side YZ, stick pins P_3 and P_4 such that they appear to be in line with the images of pins P_1 and P_2.

(j) Remove the glass block and the pins.

(k) Draw a line through P_3 and P_4 to meet YZ at C.

(l) Join C to B.

(m) Measure and record angle β, and distance, x.

(n) Repeat procedures (f) to (m) for $\alpha = 25^\circ, 30^\circ, 40^\circ, 50^\circ$ and 60°.

(o) Tabulate your results, including values of $\sin\alpha$ and $\frac{x\cos\beta}{b}$.

Scanned with CamScanner

(p) Plot a graph of $\sin\alpha$ against $\frac{x\cos\beta}{b}$.

(q) Find slope, S, of the graph.

N.B. Hand in the tracing paper used in the experiment together with your results.

3. In this experiment, you will determine the resistance per metre, S and the length l, of the sealed part of the wire, P provided. *(33 marks)*

PART I

(a) Connect the circuit shown in figure 5.

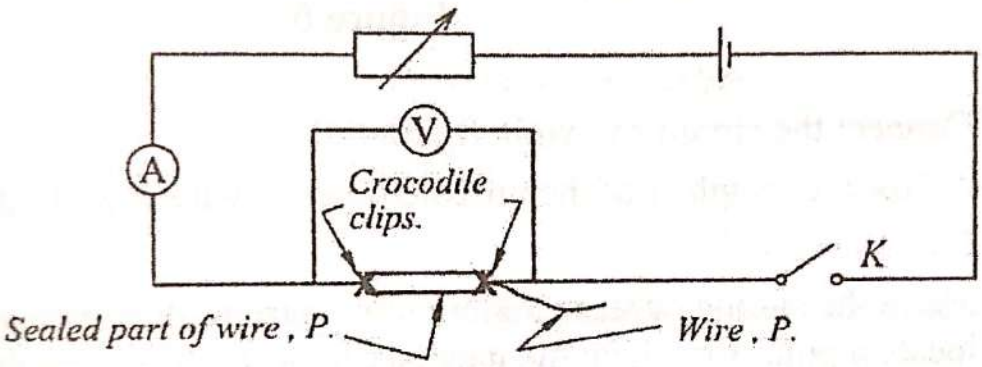

Figure 5

(b) Close switch K.

(c) Adjust the rheostat until the ammeter reading $I_0 = 0.06$A.

(d) Read and record the voltmeter reading, V_0 across the sealed part of P.

(e) Open switch K.

(f) Dismantle the circuit.

(g) Calculate the resistance, R_0, of the sealed part of wire P, from,

$$R_0 = \frac{V_0}{I_0}$$

Scanned with CamScanner

PART 11

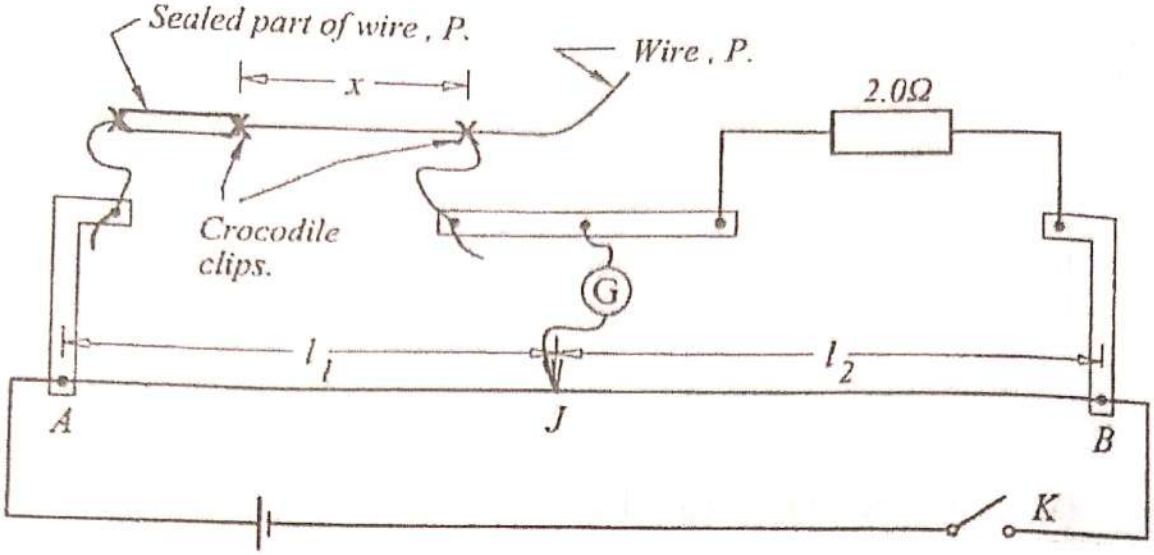

Figure 6

(a) Connect the circuit shown in figure 6.

(b) Adjust the length, x of the unsealed part of wire P to 0.100m.

(c) Close switch K.

(d) Move the sliding contact, J along the metre bridge wire AB to locate a point for which the galvanometer, G shows no deflection.

(e) Read and record the balance lengths l_1 and l_2.

(f) Open switch K.

(g) Repeat procedures (b) to (f) for values of
$x = 0.200, 0.300, 0.400, 0.500$ and 0.600 m

(h) Tabulate your results in a suitable table including values of
$R = 2\frac{l_1}{l_2}$.

(i) Plot a graph of R against x.

(j) Determine the slope, S of the graph.

(k) Read and record the intercept, R_1 on the $R-$axis.

(l) Calculate the average resistance, R_c of the sealed part of wire P
from $R_c = \frac{1}{2}(R_0 + R_1)$.

(m) Determine the length, l_0 of the sealed part of wire P from,
$l_0 = \frac{R_c}{S}$.

Scanned with CamScanner

P510/3 Inst. Sch.
PHYSICS
PRACTICAL
INSTRUCTIONS
Nov./Dec. 2011

UGANDA NATIONAL EXAMINATIONS BOARD

Uganda Advanced Certificate of Education

PHYSICS PRACTICAL INSTRUCTIONS

P510/3/Inst. Sch.

November/December, 2011

CONFIDENTIAL

Great care should be taken that the information given below does not reach the candidates either directly or indirectly.

INSTRUCTIONS FOR PREPARING APPARATUS

The candidates will be instructed not to write out a detailed description of the apparatus. But the Teacher responsible for preparing the apparatus must give details (on the report form attached) about some of the items of apparatus he/she has supplied. The form should be signed by the invigilator, the Teacher responsible for preparing the apparatus and the Headteacher.

[N.B: The Headteacher **must** ensure that the teacher responsible for preparing the apparatus hands in his/her trial results properly sealed in a separate envelope and firmly fastened (attached) to the candidates' scripts envelope(s)]

Scanned with CamScanner

In addition to the apparatus ordinarily contained in a Physics laboratory, each candidate will require:

Question 1

1	half – metre rule (a metre rule will do).
2	mass hangers of 100g each.
4	masses of 100g each.
2	pieces of knitting thread, each 60.0 cm long.
1	helical spring (nufield type).
1	metre rule.
1	retort stand and clamp.

Question 2

1	soft board.
1	equilateral glass prism (50mm x 50mm).
4	optical pins.
4	drawing pins (sellotape can do).
2	plain sheets of white paper.
1	complete mathematical set.

Question 3.

1	voltmeter (0-3V).
2	ammeter (0-1A).
1	centre-zero galvanometer.
2	sliding contacts.
2	switches labelled K_1 and K_2.
1	fresh size D dry cell marked E in a holder.
2	fresh size D dry cells in a holder labelled D.
1	1Ω standard resistor labelled R_s.
1	rheostat (0 - 50Ω).
1	slide wire potentiometer.
10	pieces of connecting wires each about 50cm long.
1	piece of connecting wire with one end connected to a crocodile clip to act as a jockey.

Scanned with CamScanner

P510/3
PHYSICS
PRACTICAL
Paper 3
Nov./Dec. 2011
$3^1/_4$ hours

UGANDA NATIONAL EXAMINATIONS BOARD

Uganda Advanced Certificate of Education

PHYSICS PRACTICAL

(PRINCIPAL SUBJECT)

Paper 3

3 hours 15 minutes

INSTRUCTIONS TO CANDIDATES:

Answer **Question 1** *and* **one** *other question.*

Candidates are not allowed to use the apparatus or write for the first fifteen minutes.

Graph papers are provided.

Mathematical tables and non-programmable scientific electronic calculators may be used.

Write on one side of the paper only.

Candidates are expected to record on their scripts all their observations as these observations are made and to plan the presentation of the records so that it is not necessary to make a fair copy of them. The working of the answers is to be handed in.

Details on the question paper should **not** *be repeated in the answer, nor is the theory of the experiment required unless specifically asked for. Candidates should, however, record any special precautions they have taken and any particular feature of their method of going about the experiment.*

Marks are given mainly for a clear record of the observations actually made, for their suitability and accuracy, and for the use made of them.

© 2011 Uganda National Examinations Board

Scanned with CamScanner

1. In this experiment, you will determine the force constant, k, of the spring provided. *(34 marks)*

(a) Measure and record the entire length, x_o, of the unstretched spring as shown in Figure 1.

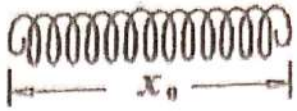

Fig. 1

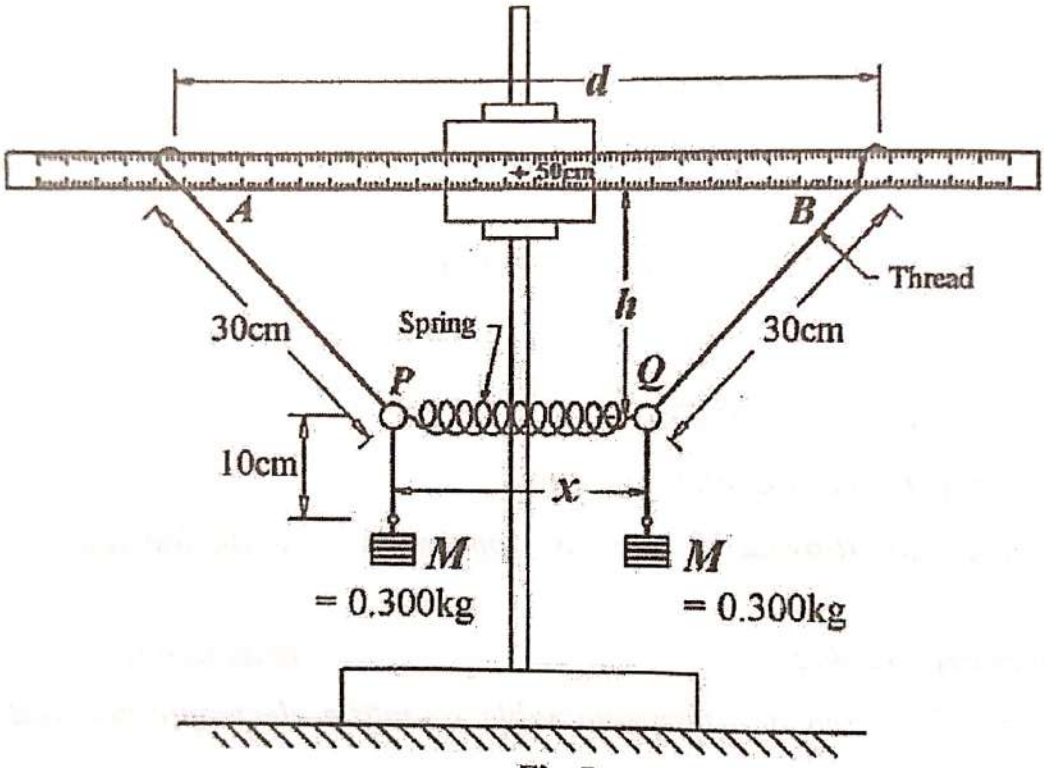

Fig. 2

(b) Clamp the metre rule provided with graduated scale facing you.

(c) Tie each of the two pieces of thread provided on the metre rule.

(d) Tighten one of the pieces of thread to end P of the spring, and the other piece to end Q of the spring such that $AP = BQ = 30.0$cm. (Ensure that the free end of each thread is about 15cm from the spring).

(e) Tie a mass $M = 0.300$kg to each of the free ends of the threads such that the length of each thread below the spring is 10.0cm as shown in Figure 2.

(f) Adjust the positions A and B such that their distance apart, $d = 20.0$cm.

Scanned with CamScanner

(g) Measure and record the vertical distance, h, from the spring to the metre rule.

(h) Measure and record the length, x, of the entire spring.

(i) Find the extension, e in metres of the spring.

(j) Calculate the value of $y = \frac{1}{2}(d - x)$.

(k) Repeat procedures (f) to (j) for values of $d = 30.0, 40.0, 50.0, 60.0$ and 70.0cm.

(l) Tabulate your results including values of y/h.

(m) Plot a graph of y/h against e.

(n) Determine the slope, S, of the graph.

(o) Calculate the force constant, k, from

$$S = \frac{k}{2Mg}$$

where $g = 9.81\text{ms}^{-2}$, acceleration due to gravity.

DISMANTLE THE SET UP.

2. In this experiment, you will determine the refractive index, n, of a glass prism in air by two methods. *(33 marks)*

METHOD I

(a) Fix a plain sheet of white paper on a soft board.

(b) Place the glass prism on the paper and trace its outline.

(c) Remove the prism and label its outline ABC.

(d) Mark point, O about midway along AB.

(e) Draw a line OR perpendicular to AC at N such that $ON = NR$ as shown in Figure 3.

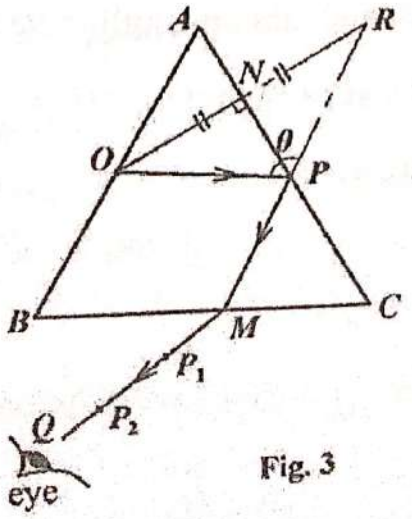

Fig. 3

Scanned with CamScanner

(f) Replace the prism on its outline.

(g) Fix an optical pin close to side AB at O.

(h) View through face BC the image I of O.

(i) While moving the eye towards B, observe the position when the image I just disappears.

(j) Fix pins P_1 and P_2 to mark this position.

(k) Remove the prism and the pins.

(l) Draw a line QM through P_1 and P_2.

(m) Join M to R.

(n) Draw line OP.

(o) Measure and record angle θ.

(p) Calculate the angle, β, from the expression

$$\beta = \tfrac{1}{2}(180 - \theta).$$

(q) Calculate the refractive index, n_1, from the expression,

$$n_1 = \frac{1}{Sin\beta}.$$

METHOD II

(a) Fix a fresh plain sheet of white paper on a soft board such that the longer length is horizontal.

(b) Place the glass prism on the paper and trace out its outline.

(c) Remove the prism and label its outline RST.

(d) Draw a normal AB at M such that $SM = \frac{1}{3}SR$ and $MB = 9.0\text{cm}$ as shown in Figure 4.

Scanned with CamScanner

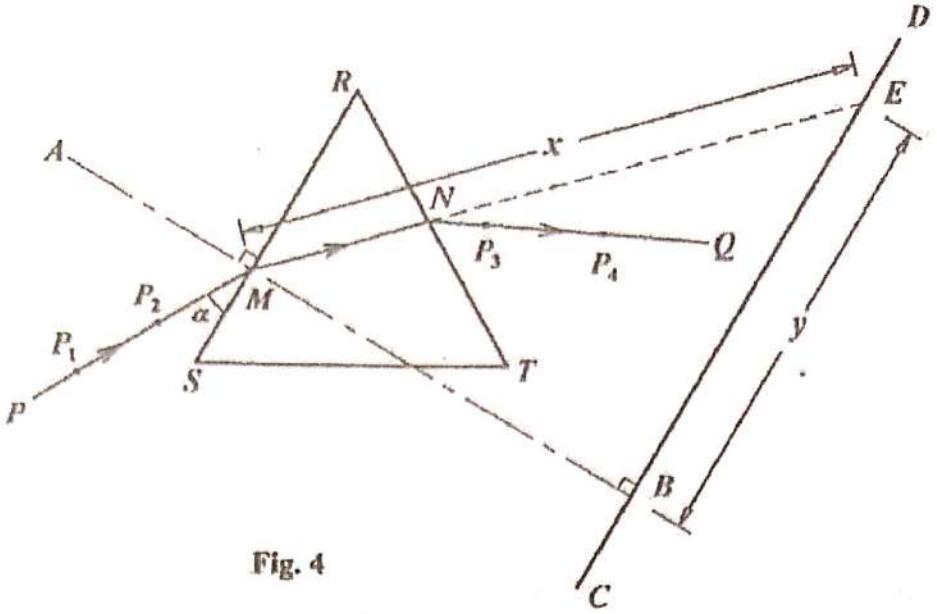

Fig. 4

(e) Draw another normal CD at B such that $BD = 10$cm.

(f) Draw a line PM such that angle $\alpha = 20^\circ$.

(g) Fix pins P_1 and P_2 vertically upright on PM.

(h) Replace the prism on its outline.

(i) While viewing through face RT, fix pins P_3 and P_4 such that they appear to be in line with the images of P_1 and P_2.

(j) Remove the prism and the pins.

(k) Draw a line NQ through the positions P_3 and P_4.

(l) Join M to N and extend the line to cut CD at E.

(m) Measure and record distances $ME = x$ and $BE = y$.

(n) Repeat procedures (f) to (m) for values of $\alpha = 25^\circ, 30^\circ, 35^\circ, 40^\circ, 45^\circ$ and 50°.

(o) Tabulate your results including values of $\cos\alpha$ and $\frac{y}{x}$.

(p) Plot a graph of $\cos\alpha$ against $\frac{y}{x}$.

(q) Determine the slope, n_2, of your graph.

(r) Calculate the refractive index, n of the material of the prism from the expression; $\frac{n}{n_1 + n_2} = (0.125)^{1/3}$.

HAND IN YOUR TRACING PAPERS TOGETHER WITH YOUR ANSWER SHEETS.

Scanned with CamScanner

3. In this experiment, you will check the calibration of an ammeter using a slide wire potentiometer. *(33 marks)*

(a) Connect the voltmeter provided across the terminals of the cell marked E.

(b) Read and record the voltmeter reading E_o.

(c) Connect the circuit shown in Figure 5.

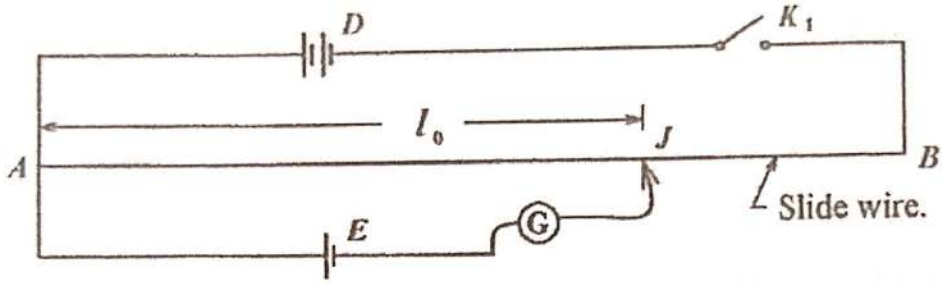

Fig. 5

(d) Close switch, K_1.

(e) Move the sliding contact, J, along the slide wire, AB to locate a point on it for which G shows no deflection.

(f) Measure and record the balance length, l_o.

(g) Open switch, K_1.

(h) Calculate the value of k from the expression

$$k = \frac{E_o}{l_o \times R_s} \quad \text{where } R_s = 1\Omega$$

(i) Connect the circuit shown in Figure 6.

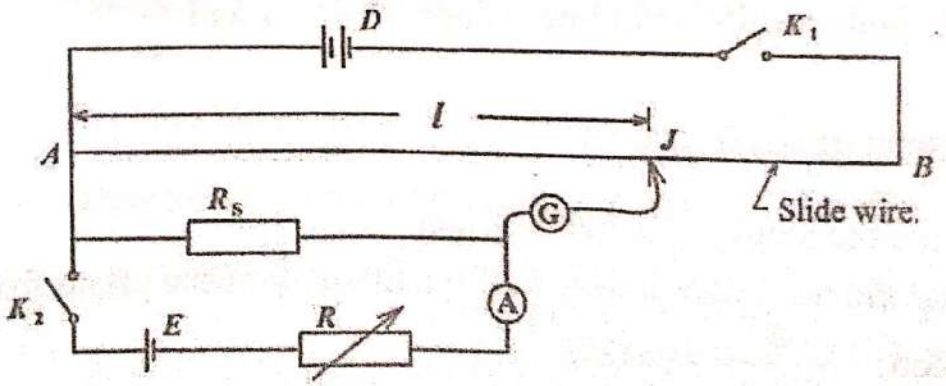

Fig. 6

Scanned with CamScanner

(j) Close switch, K_2.

(k) Adjust the rheostat, R, until the ammeter, A reads $I_r = 0.15$A.

(l) Close switch K_1.

(m) Move the sliding contact, J, along the slide wire to locate a point on it for which G shows no deflection.

(n) Measure and record the balance length l.

(o) Open switch, K_1.

(p) Repeat procedures (k) to (o) for ammeter readings $I_r = 0.20$, 0.25, 0.30, 0.35, 0.40, 0.45 and 0.50A.

(q) Tabulate your results including the values of $I_a = kl$.

(r) Plot a graph of I_a against I_r.

(s) Find the slope, S, of the graph.

(t) Comment on the value of the slope.

DISMASNTLE THE SET UP.

Scanned with CamScanner

UGANDA NATIONAL EXAMINATIONS BOARD

Uganda Advanced Certificate of Education

PHYSICS PRACTICAL INSTRUCTIONS

(P510/3/Inst. Sch)

November/December 2012

CONFIDENTIAL

Great care should be taken that the information given below does not reach the candidates either directly or indirectly.

INSTRUCTIONS FOR PREPARING APPARATUS

The candidates will be instructed not to write out a detailed description of the apparatus. But the Teacher responsible for preparing the apparatus must give details(on the report form attached) about some of the items of apparatus he/she has supplied. The form should be signed by the invigilator, the Teacher responsible for preparing the apparatus and the Headteacher.

[**N.B:** The Headteacher **must** ensure that the teacher responsible for preparing the apparatus hands in his/her trial results properly sealed in a separate envelope and **firmly** fastened (attached) to the candidates' scripts envelope(s)]

© 2012 *Uganda National Examinations Board.*

Scanned with CamScanner

In addition to the apparatus ordinarily contained in a Physics laboratory, each candidate will require:

Question 1

2	metre rules, one labelled X.
1	G – clamp (a heavy stone or brick can do)
1	retort stand with a clamp.
1	piece of cotton thread (about 50cm long).
1	optical pin (as a pointer).
1	piece of sellotape.
1	100g mass.
1	stop clock.

Question 2

1	glass prism (60° by 60° by 60°).
1	complete mathematical set.
1	soft board.
1	plain sheet of white paper.
4	drawing pins.
4.	optical pins.

Question 3

2	fresh dry cells (each 1.5V) in a holder.
102 cm	Constantan wire SWG 30, labelled, W
1	centre – zero galvanometer.
1	rheostat (0-50 Ω) labelled Q
1	switch labelled, K
2	pieces of sellotape
1	meter rule.
1	meter bridge.
1	5 Ω standard resistor.
1	10 Ω standard resistor.
1	ammeter (0 – 1A).
1	voltmeter (0 – 3V).
2	crocodile clips.
1	jockey (a crocodile clip can do)
8	pieces of connecting wires (each about 50 cm long).

Scanned with CamScanner

1. In this experiment, you will determine Young's modulus for a metre using two methods. *(34 marks)*

METHOD I

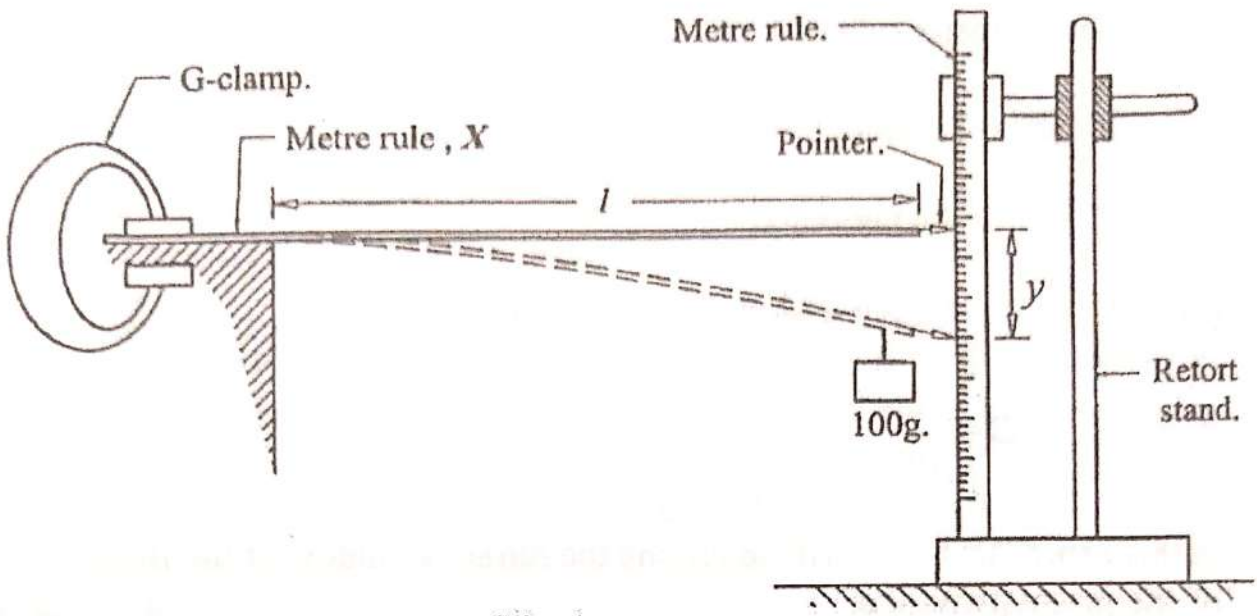

Fig. 1

(a) Measure and record the breadth, b and thickness, d of the metre rule labeled, X.

(b) Clamp the meter rule X on the table with length $l = 0.900$ m free. Attach a pointer at the free end of the metre rule as shown in Figure 1.

(c) Suspend a mass of 0.100 kg at a distance 2.0 cm from the free end of the metre rule X.

(d) Determine the depression, y in metres of X.

(e) Repeat procedure (b) to (d) for values of $l = 0.800$, 0.700, 0.600, 0.500, 0.400 and 0.300 m.

(f) Tabulate your results including values of $\log_{10} y$ and $\log_{10} l$.

(g) Plot a graph of $\log_{10} y$ against $\log_{10} l$.

(h) Read and record the intercept, C on the vertical axis.

(i) Calculate Young's Modulus, E from the expression,

$$C = \log_{10}\left(\frac{0.4g}{Ebd^3}\right)$$

Where $g = 9.81\ \text{ms}^{-2}$

Scanned with CamScanner

METHOD II

(a) Using the arrangement in Figure 1 above, adjust the length, l to 0.900 m.

(b) Set the metre rule into vertical vibration.

(c) Measure the time, t for 20 oscillations.

(d) Calculate the period, T.

(e) Calculate Young's Modulus, E from the expression:

$$E = \frac{16\pi^2 l^3}{10T^2 bd^3}$$

2. In this experiment, you will determine the refractive index, of the material of the prism provided. *(33 marks)*

(a) Fix the white sheet of paper on the drawing board using drawing pins.

(b) Place the prism on the sheet of paper and trace its outline, FGH.

(c) Remove the prism and draw a normal at a point, B midway between F and G.

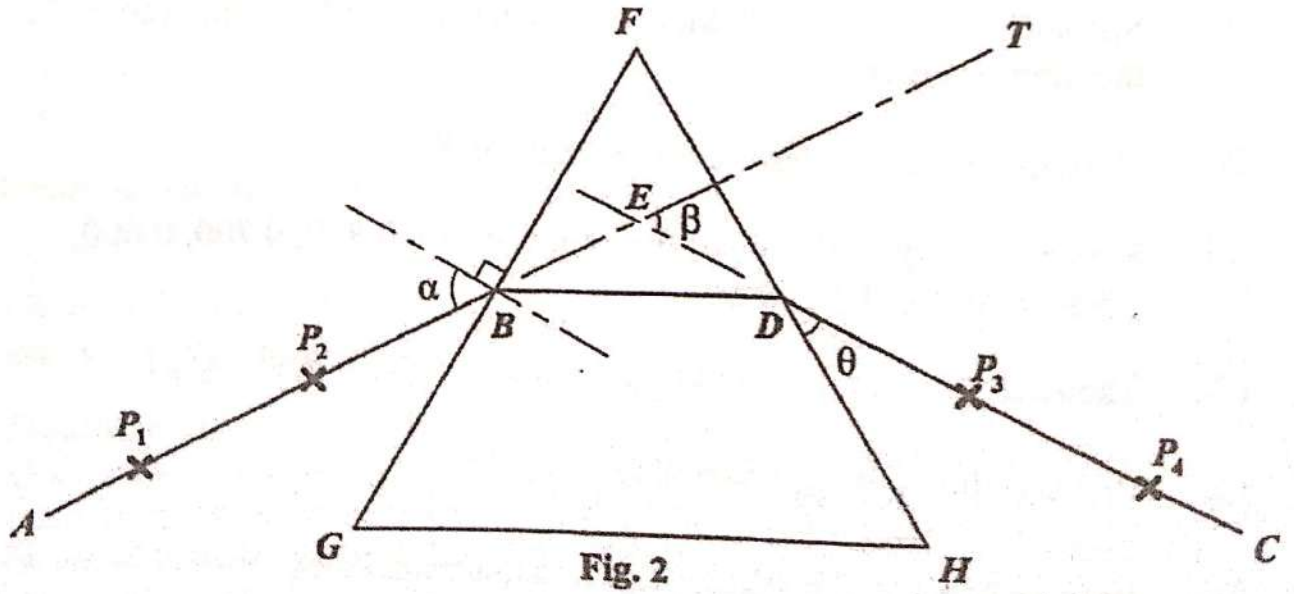

Fig. 2

Scanned with CamScanner

(d) Draw a line ABT making an angle, $\alpha = 35^{\circ}$ with the normal drawn at point B as shown in Figure 2.

(e) Place the prism back on its outline.

(f) Fix optical pins P_1 and P_2 along AB.

(g) Looking from side FH, fix pins P_3 and P_4, such that they appear in line with the images of pins P_1 and P_2.

(h) Remove the prism and draw a line CE through points P_3 and P_4 to meet line FH, at D.

(i) Measure and record angles $HDC = \theta$ and CET $= \beta$.

(j) Find $\phi = \beta + \theta - 90$.

(k) Repeat procedures (d) to (j) for $\alpha = 40^{\circ}, 45^{\circ}, 50^{\circ}, 55^{\circ}, 60^{\circ}$ and 65°.

(l) Record your results in a suitable table.

(m) Plot graphs of ϕ against α and β against α using the same axes.

(n) Read and record the intercept, C on the vertical axis for the graph of ϕ against α.

(o) Read and record the minimum value, β_o of β from the graph of β against α.

(p) Calculate the refractive index, k of the material of the prism from the expression

$$k = \frac{\sin\left[\left(\frac{\beta_o - C}{2}\right)\right]}{\sin\left(\frac{C}{2}\right)}$$

HAND IN THE TRACINGS TOGETHER WITH YOUR WORK.

Scanned with CamScanner

3. In this experience, you will determine the resistance per meter length of the wire provided. *(33 marks)*

PART I

(a) Connect the dry cell, a rheostat, Q, a switch, K, ammeter, A and a resistor of 5 Ω in series as shown in Figure 3.

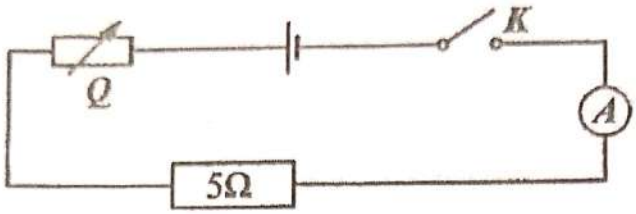

Fig. 3

(b) Close switch K.

(c) Adjust the rheostat until the ammeter registers a current, $I = 0.08$ A.

(d) Disconnect the circuit, but keep the setting of the rheostat unaltered.

(e) Connect the circuit shown in figure 4.

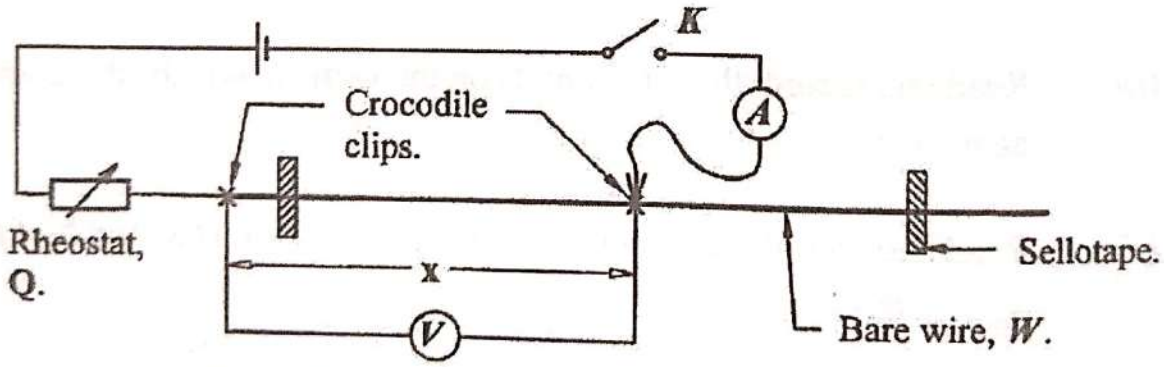

Fig. 4

(f) Close switch K.

(g) Without altering the setting of the rheostat, adjust the position of the crocodile clips until the reading of the ammeter, $I = 0.08$ A.

(h) Read and record the length x_o of the bare wire, W between the two crocodile clips.

(i) Open switch K.

Scanned with CamScanner

(j) Calculate the resistance per metre length, r_o from

$$r_o = \frac{5}{x_o}$$

(k) Close switch K.

(l) Adjust the length of the bare wire, W, between the crocodile clips such that $x = 0.200$ m.

(m) Adjust the rheostat until the current registered by the ammeter, $I = 0.08$ A.

(n) Read and record the voltmeter reading, V.

(o) Repeat procedures (l) to (n) for values of $x = 0.300$, 0.400, 0.500, 0.600 and 0.700 m.

(p) Disconnect the circuit.

(q) Tabulate your results including values of $^{I}/_{V}$ and $^{I}/_{x}$.

(r) Plot a graph of $^{I}/_{x}$ against $^{I}/_{V}$.

(s) Determine the slope, r_1 of the graph.

Scanned with CamScanner

PART II

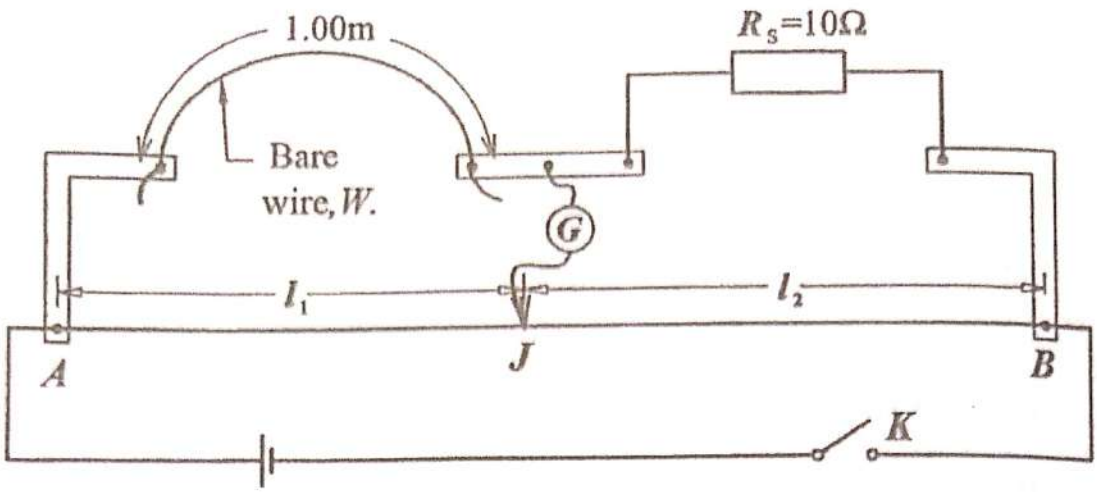

Fig. 5

(a) Connect the circuit shown in Figure 5 with 1.00 m length of the bare wire, *W* connected in the left hand gap of the metre bridge.

(b) Connect the standard resistor, $R_s = 10\ \Omega$ in the right hand gap of the metre bridge.

(c) Close switch *K*.

(d) Move the sliding contact, *J* along the metre bridge wire, *AB*, to locate a point for which the galvanometer shows no deflection.

(e) Read and record the balance lengths l_1 and l_2.

(f) Open switch, *K*.

(g) Calculate the resistance per metre length, r_2, of bare wire, *W* from

$$r_2 = R_s \, l_1 / l_2$$

(h) Repeat procedures (b) to (f) with $R_s = 5.0\ \Omega$.

(i) Calculate the resistance per metre length, r_3 of bare wire, *W* from

$$r_3 = R_s \, l_1 / l_2$$

(j) Calculate the average of r_o, r_1, r_2 and r_3.

Scanned with CamScanner

P510/3 Inst.Sc.
PRACTICAL
PHYSICS
INSTRUCTIONS
Nov./Dec. 2013

UGANDA NATIONAL EXAMINATIONS BOARD

Uganda Advanced Certificate of Education

PHYSICS PRACTICAL INSTRUCTIONS

P510/3 Inst.Sch.

November /December 2013

CONFIDENTIAL:

Great care should be taken that the information given below does not reach the candidates either directly or indirectly.

INSTRUCTIONS FOR PREPARING APPARATUS

The candidates will be instructed not to write out a detailed description of the apparatus. But the Teacher responsible for preparing the apparatus must give details (on the report form attached) about some of the items of apparatus he/she has supplied. The form should be signed by the invigilator, the Teacher responsible for preparing the apparatus and the Headteacher.

[**N.B:** The Headteacher must ensure that the teacher responsible for preparing the apparatus hands in his/her trial results properly sealed in a separate envelope and **firmly** fastened (attached) to the candidate's scripts envelope(s)]

Scanned with CamScanner

In addition to the apparatus ordinarily contained in physics laboratory, each candidate will require:

Question 1

1 uniform metre rule.
1 uniform half metre rule.
1 retort stand with a clamp.
2 20 g slotted masses.
4 pieces of knitting thread (each about 30 cm long).
Access to a weighing balance reading to at least one decimal point.

Question 2

1 convex lens (focal length = 15.0 cm) in a holder.
1 screen with a hole covered with a wire gauze.
1 metre rule.
1 torch bulb.
2 dry cells (size D) in a holder.
3 pieces of connecting wire each about 50 cm long.
1 switch labelled, *K*.
1 white screen.
1 plane mirror in a holder.
1 optical pin in a holder.

Question 3

1 metre bridge
10 pieces of connecting wire (each about 50 cm long).
1 metre rule.
1 ammeter (0 – 1.0 A).
1 voltmeter (0 – 3.0 V).
1 switch.
1 resistance box (0 – 20 Ω) or a combination of, one – 1 Ω resistor, two – 2 Ω resistors, and one – 5 Ω resistor (standard resistors can do).
2 crocodile clips.
1 fresh dry cell (size D) in a holder.
1 jockey (a crocodile clip will do).
1 centre zero galvanometer.
1 Resistor made from constantan wire SWG 30, of 102 cm long wound on a piece of manila paper (make sure that the turns **do not** touch one another). Cover the turns with a masking tape and label the resistor *X*. Leave 1.0 cm length protruding from either end.

Scanned with CamScanner

1. In this experiment, you will determine the mass, M, of the metre rule provided using two methods. *(34 marks)*

METHOD I

(a) Tie a knot on the metre rule using a piece of thread.

(b) Suspend the metre rule from the clamp of the retort stand.

(c) Suspend a 40 g mass at distance $d = 4.0$ cm from the zero cm mark of the metre rule.

(d) Adjust the position of the knot until the metre rule balances horizontally as shown in Figure 1.

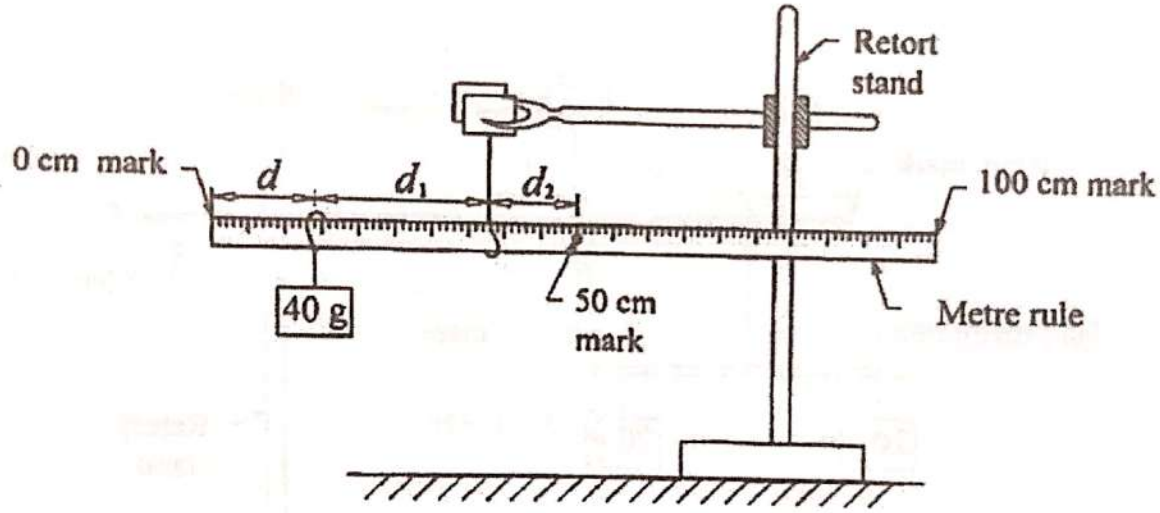

Fig. 1

(e) Measure and record the distances d_1 and d_2.

(f) Calculate the value, M_1 from

$$M_1 = \frac{d_1 \times 40}{d_2}$$

(g) Repeat the procedure in (c) and (d) for the value of $d = 6.0$ cm.

(h) Measure, and record the new values of d_1' and d_2' respectively.

(i) Determine the value of M_2 from the expression

$$M_2 = \frac{d'_1 \times 40}{d'_2}$$

(j) Calculate the average, M, of M_1 and M_2.

Scanned with CamScanner

METHOD II

(a) Weigh the half metre rule provided and record its mass, m_0.

(b) Remove the 40 g mass from the metre rule.

(c) Suspend two 20 g masses from the half metre rule such that one is at the 15.0 cm mark while the other is at the 35.0 cm mark.

(d) Suspend the loaded half metre rule from the metre rule such that the distance x = 10.0 cm.

(e) Adjust the knot at B such that the metre rule balances horizontally. Ensure that the whole system balances as shown in Figure 2.

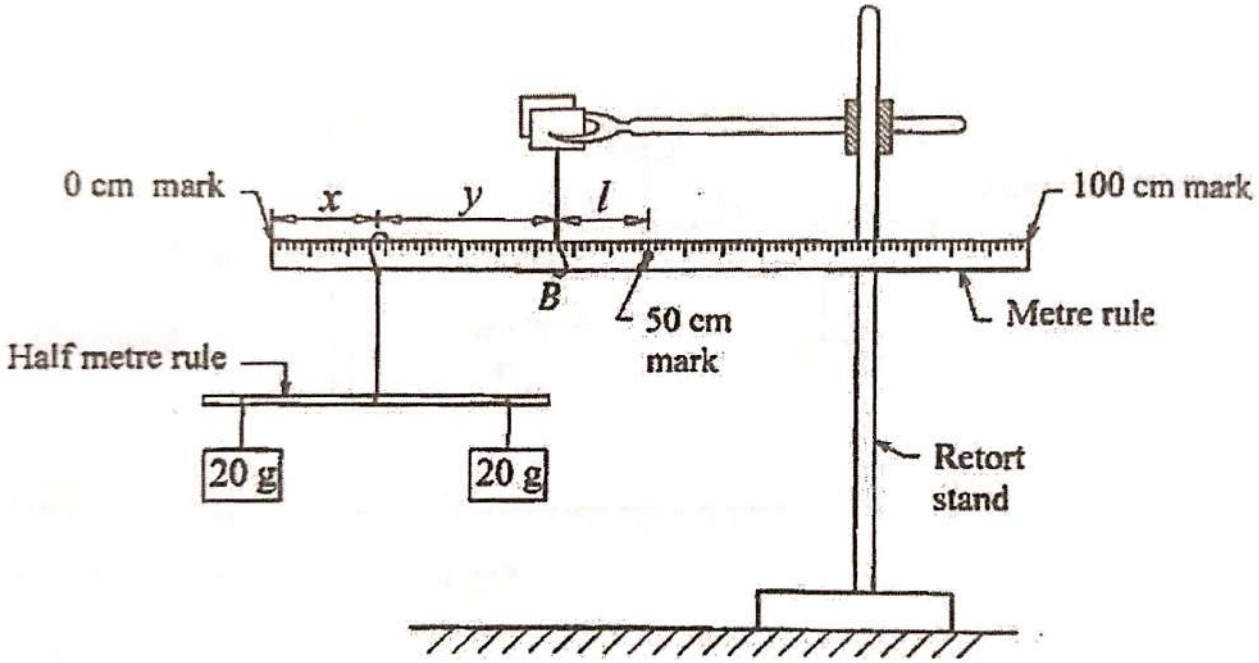

Fig. 2

(f) Measure and record the distances y and l.

(g) Repeat the procedure from (d) to (f) for values of x = 15.0, 20.0, 25.0, 30.0 and 35.0 cm.

(h) Record your results in a suitable table including values of y^2 and l^2.

(i) Plot a graph of y^2 against l^2.

(j) Determine the slope, S, of the graph.

(k) Calculate the value of M from the expression

$$S = \left(\frac{M}{40 + m_o}\right)^2$$

Scanned with CamScanner

2. In this experiment, you will determine the focal length of a convex lens using two methods. *(33 marks)*

METHOD 1

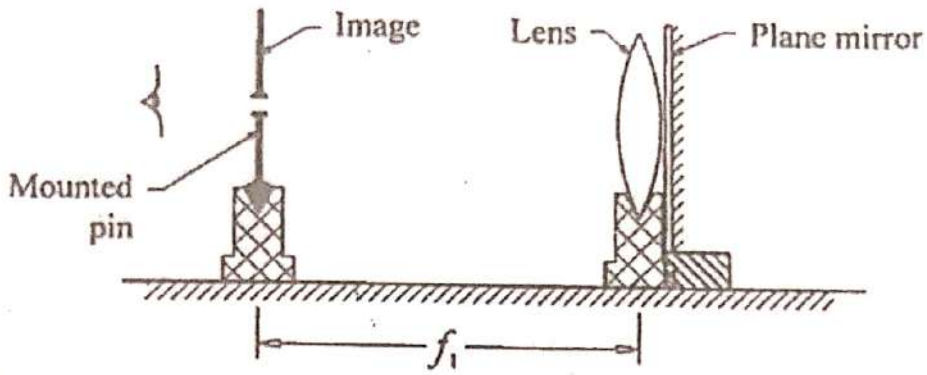

Fig. 3

(a) Arrange the mounted pin, converging lens and the plane mirror as shown in Figure 3.

(b) Adjust the position of the pin until its image appears to coincide with it.

(c) Measure and record the distance, f_1, between the lens and the pin.

METHOD II

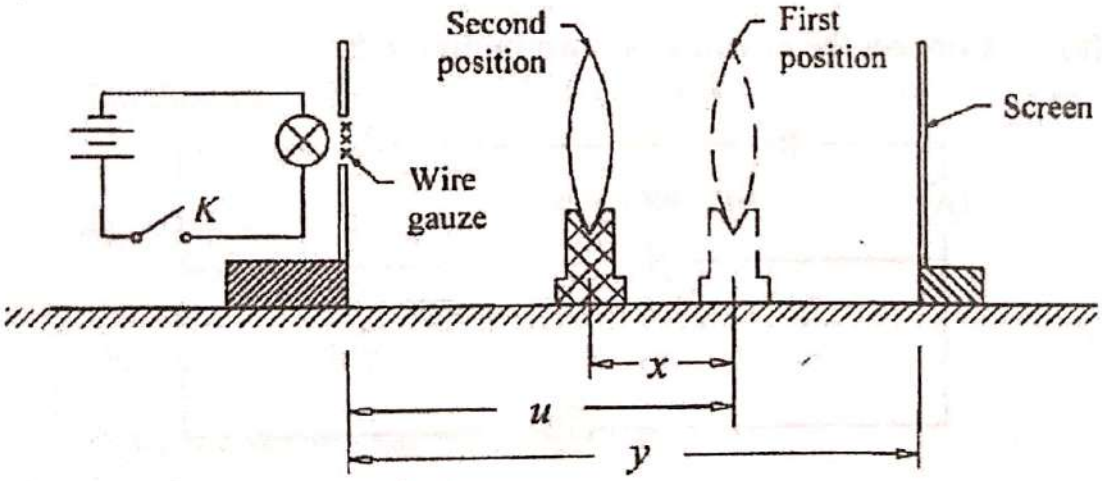

Fig. 4

(a) Connect the torch bulb in series with the dry cells and switch, K.

(b) Set up the arrangement shown in Figure 4.

(c) Adjust the position of the lens such that the distance $u = 40.0$ cm.

(d) Adjust the position of the screen until a clear image of the gauze is obtained on it.

Scanned with CamScanner

(e) Measure and record the distance, y, between the two screens.

(f) Without changing the position of the screens, displace the lens so that another clear image of the wire gauze is formed on the screen.

(g) Measure and record the distance, x, between the two positions of the lens.

(h) Repeat procedures (c) to (g) for values of u = 50.0 , 60.0 , 65.0 , 70.0, and 80.0 cm.

(i) Tabulate your results including values of x^2 and x^2/y .

(j) Plot a graph of x^2/y against y.

(k) Read and record the intercepts, C_1,on the vertical axis and C_2, on the horizontal axis.

(l) Calculate f_2 from the expression

$$f_2 = \frac{1}{8}(C_2 - C_1)$$

3. In this experiment, you will determine the resistance, p, of the resistor labelled X.

PART I

(a) Connect the circuit as shown in Figure 5.

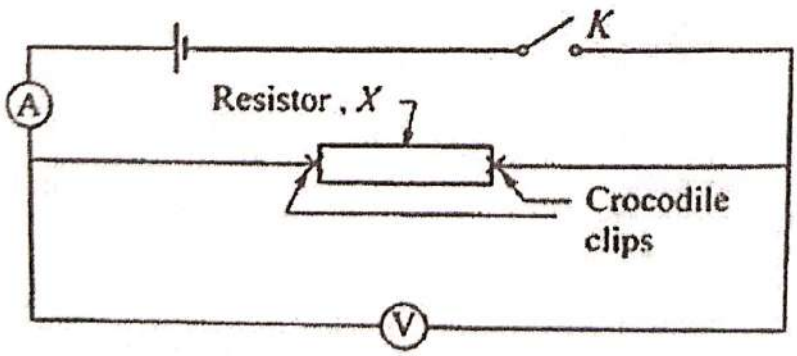

Fig. 5

(b) Close switch K.

(c) Read and record the ammeter and voltmeter readings I_o and V_o respectively.

(d) Calculate the resistance, R_o of the resistor X from

$$R_o = \frac{V_o}{I_o}$$

Scanned with CamScanner

PART II

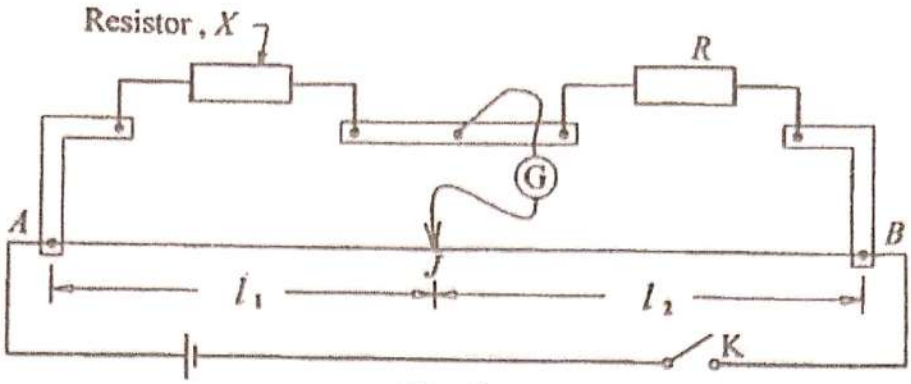

Fig. 6

(a) Connect the circuit shown in Figure 6 with $R = 2\ \Omega$

(b) Close switch K.

(c) Move the sliding contact, J, along the metre bridge wire AB, to locate a point for which the galvanometer, G, shows no deflection.

(d) Read and record the balance lengths, l_1, and l_2.

(e) Open switch K.

(f) Repeat the procedure from (b) to (e) for values of $R = 3, 4, 5, 6$ and $7\ \Omega$.

(g) Tabulate your results in a suitable table including values of $\frac{l_1}{l_2}$ and $\frac{1}{R}$.

(h) Plot a graph of $\frac{l_1}{l_2}$ against $\frac{1}{R}$.

(i) Determine the slope, R_l, of the graph.

(j) Calculate the average value of p from

$$p = \frac{(R_o + R_1}{2}$$

Scanned with CamScanner

P510/3
PHYSICS
PRACTICAL
Paper 3
Nov./ Dec. 2014
3 ¼ hours

UGANDA NATIONAL EXAMINATIONS BOARD

Uganda Advanced Certificate of Education

PHYSICS PRACTICAL
(PRINCIPAL SUBJECT)

Paper 3

3 hours 15 minutes

INSTRUCTIONS TO CANDIDATES:

Answer **Question 1** *and* **one** *other question.*

Candidates are **not** *allowed to use the apparatus for the first fifteen minutes.*

Graph papers are provided.

Mathematical tables and non-programmable scientific electronic calculators may be used.

Candidates are expected to record on their scripts all their observations as these observations are made and to plan the presentation of the records so that it is not necessary to make a fair copy of them. The working of the answers is to be handed in.

Details on the question paper should **not** *be repeated in the answer, nor is the theory of the experiment required unless specifically asked for. Candidates should, however, record any special precautions they have taken and any particular feature of their method of going about the experiment.*

Marks are given mainly for a clear record of the observations actually made, for their suitability and accuracy and for the use made of them.

© 2014 Uganda National Examinations Board

Scanned with CamScanner

1. In this experiment, you will determine the constant, K, of the spiral spring provided. *(34 marks)*

PART I

(a) Balance the metre ,Q, on a knife edge with its graduated face upwards and note the position, G, of balance.

(b) Measure and record in metres the distance, x, of the knife edge from the hole, H.

(c) Pass an optical pin through the hole, H, and then fix the pin into the rubber bung or cork provided.

(d) Clamp the rubber bung or cork.

(e) Attach a pointer, P_1 , to one end of the spring provided.

(f) Suspend the spring from the rod of a clamp.

(g) Tie a pointer, P_2 firmly to the end, B, of the metre rule Q using a piece of thread.

(h) Tie the free end of the spring to the metre rule at the 99.0 cm mark as shown in figure 1.

(i) Adjust the position of the clamp from which the spring is suspended until the metre rule is horizontal.

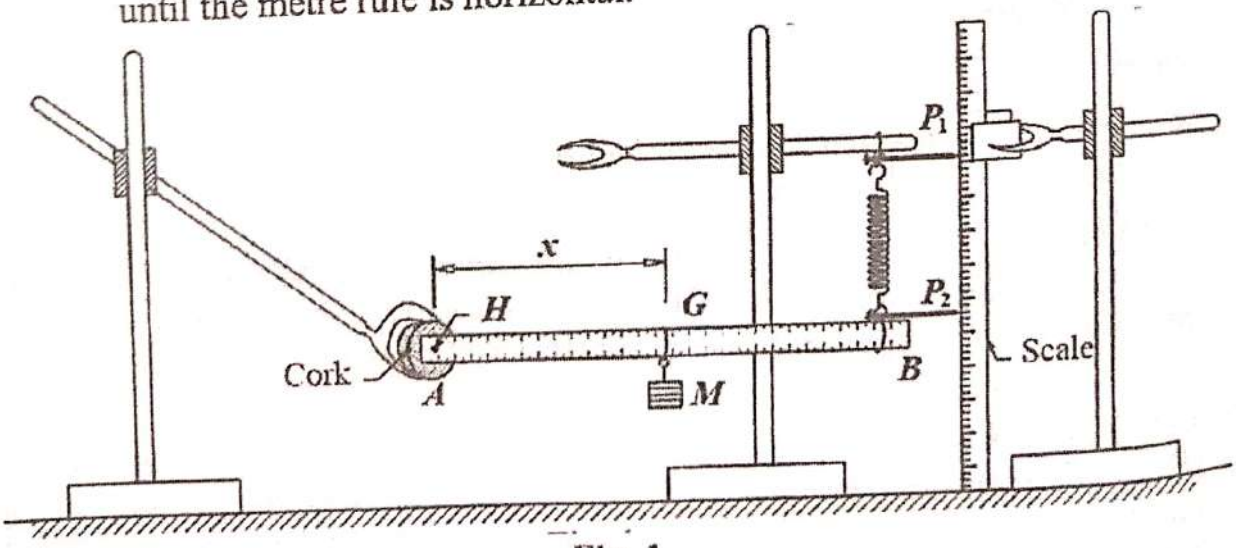

Fig. 1

(j) Clamp a metre rule vertically besides pins P_1 and P_2.

(k) Read and record the initial positions P_0 and P_0' of the pointers P_1 and P_2, respectively on the scale.

(l) Hang a mass $M = 0.100$ kg on metre rule, Q, at point G using a piece of thread.

Scanned with CamScanner

(m) Adjust the position of the clamp from which the spring is suspended until P_2 returns to its initial position.

(n) Read and record the new position, P_1' of the pointer P_1 on the scale.

(o) Find the extension, $e = (P_1' - P_0)$ of the spring and record in metres.

(p) Repeat procedures (l) to (o) for values of $M = 0.200, 0.300. 0.400. 0.500$ and 0.600 kg.

(q) Tabulate your results.

(r) Plot a graph of e against M.

(s) Find the slope, S, of the graph.

(t) Determine the constant, K_1 of the spring from the expression,

$$K_1 = \frac{xg}{0.98S}, \qquad \text{where } g = 9.81 \text{ ms}^{-2}$$

PART II

(a) Remove mass M.

(b) Adjust the position of the clamp from which the spring is suspended until the metre rule Q is horizontal.

(c) Read and record the initial position of the pointers P_1 and P_2 as P_0 and P_0'.

(d) Suspend a mass $M = 0.300$ kg at a distance $y_1 = 30.0$ cm from hole, H.

(e) Adjust the position of the clamp from which the spring is suspended until the pointer P_2 returns to its initial position.

(f) Read and record the new position, P_1', of the pointer P_1 on the scale.

(g) Find the extension $e_1 = (P_1' - P_0)$ of the spring.

(h) Repeat procedures (d) to (g) for value of $y_2 = 70.0$ cm and record the new extension as e_2.

(i) Determine the constant, K_2, of the spring from the expression

$$K_2 = \frac{3(y_2 - y_1)}{(e_2 - e_1)}$$

(j) Find K from the expression

$$K = \frac{1}{2}(K_1 + K_2)$$

DISMANTLE THE SET UP.

Scanned with CamScanner

2. In this experiment, you will determine a constant, f, of the concave mirror and the constant, n of the glass block provided. *(33 marks)*

PART I

(a) Mount the concave mirror provided in the holder.

(b) Focus a distant object onto the screen.

(c) Measure and record the distance, a, between the mirror and the screen.

(d) Arrange the screen, S_1, with wire gauge and the mirror as shown in figure 2.

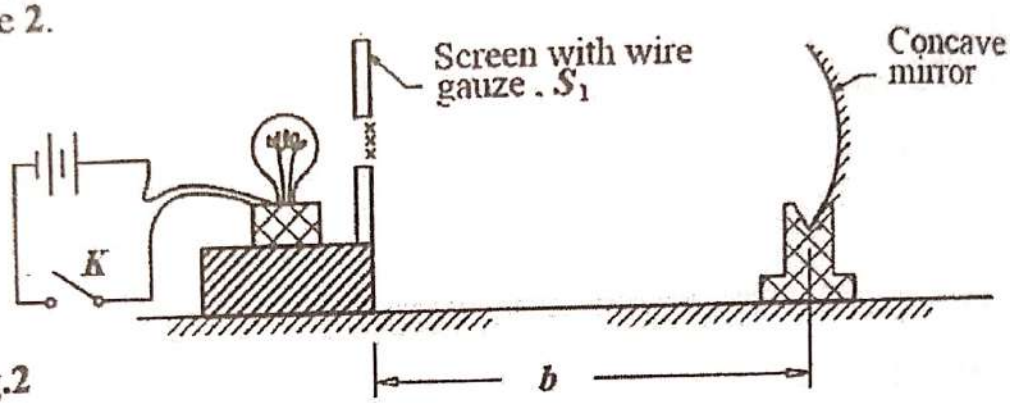

Fig.2

(e) Close switch, K, to illuminate the wire gauze.

(f) Adjust the position of the mirror until a sharp image of the wire gauze is formed on the screen besides the object.

(g) Open switch K.

(h) Measure and record the distance, b, of the mirror from the screen.

(i) Calculate the value of f_1 from the expression.

$$f_1 = \frac{(a+b)}{3}.$$

(j) Measure and record the thickness, t, of the glass block provided.

(k) Place the glass block between the screen, S_1, with wire gauze and the concave mirror with the largest face facing the wire gauze as shown in figure 3.

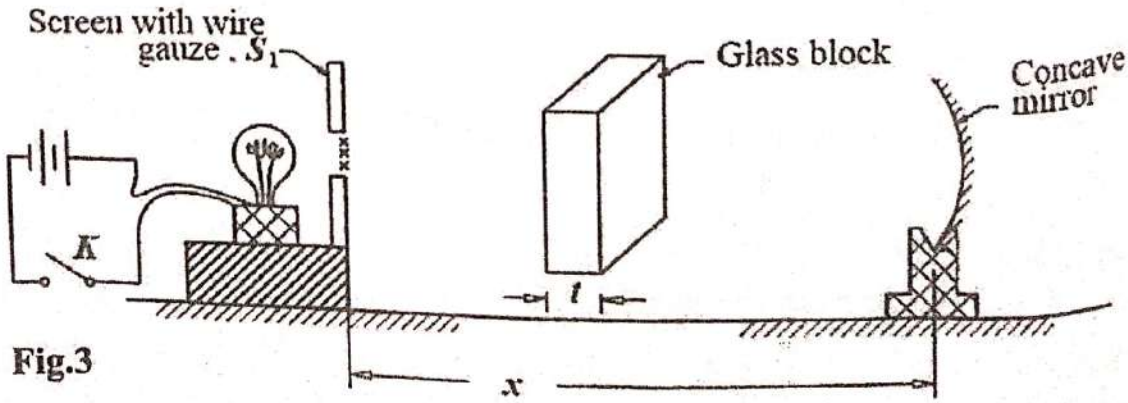

Fig.3

Scanned with CamScanner

(l) Close switch K, to illuminate the wire gauze.

(m) Adjust the position of the mirror until a sharp image of the wire gauze appears again on the screen.

(n) Open switch K.

(o) Measure and record the distance, x, between the screen and the mirror.

(p) Determine the value of the constant, n, of the glass block using the expression,

$$n = \frac{t}{(t + b - x)}.$$

PART II

(a) Remove the glass block.

(b) Arrange the apparatus as shown in figure 4.

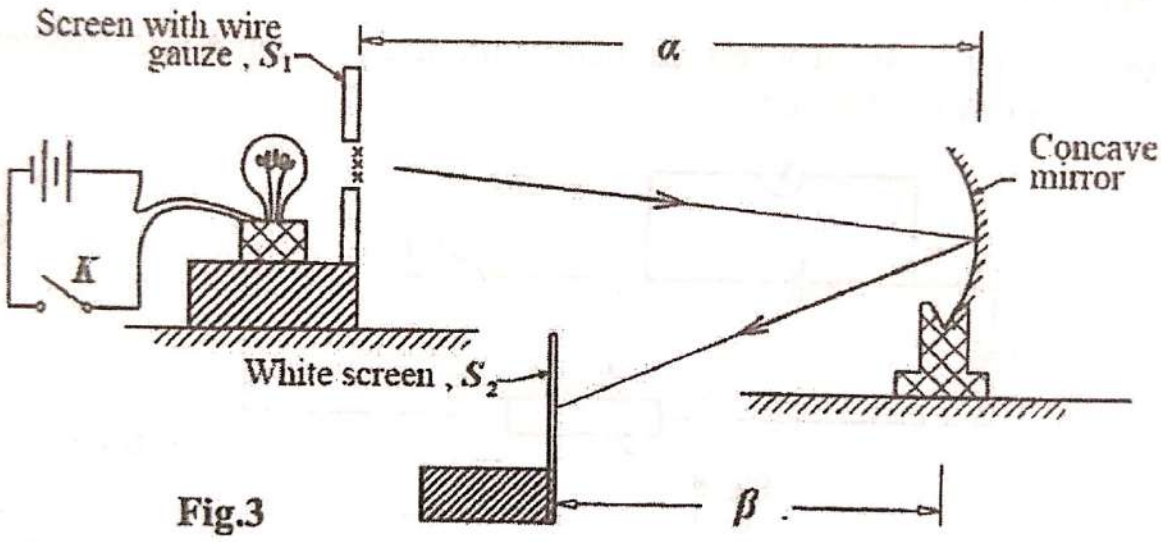

Fig.3

(c) Adjust the position of the mirror so that its distance from the object $\alpha = 30.0$ cm.

(d) Close switch K.

(e) Adjust the position of the white screen, S_2, until a sharply focused image of the wire gauze appears on it.

(f) Open switch K.

(g) Measure and record the distance, β, of the screen S_2 from the mirror.

(h) Calculate the values of $y = \beta - f_1$ and $z = \alpha - f_1$.

(i) Repeat procedures (e) to (h) for values of $\alpha = 35.0, 40.0, 45.0, 50.0$ and 55.0 cm.

Scanned with CamScanner

(j) Tabulate your results including values of $\frac{1}{z}$.

(k) Plot a graph of y against $\frac{1}{z}$.

(l) Find the slope, S, of the graph.

(m) Calculate the value of f_2 from $f_2 = \sqrt{S}$

(n) Determine the value of the constant, f of the concave mirror using $f = \frac{1}{2}(f_1 + f_2)$.

3. In this experiment, you will determine the internal resistance, r, of a dry cell using two methods. *(33 marks)*

METHOD I

(a) Connect the dry cell, ammeter, voltmeter, switch K and rheostat as shown in figure 5.

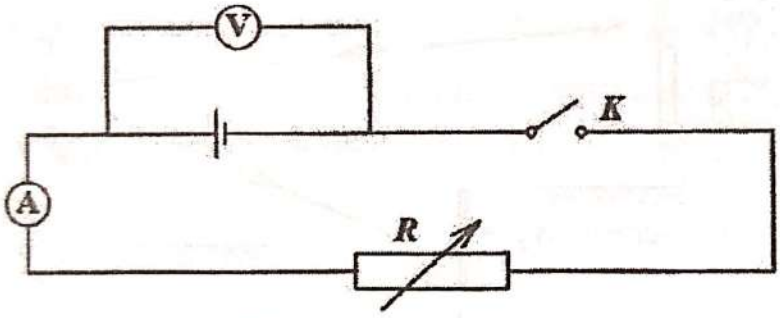

Fig. 5

(b) With switch, K open, read and record the voltmeter reading E.

(c) Close switch K.

(d) Adjust the rheostat until the ammeter reads 0.6 A.

(e) Read and record the voltmeter reading, V_1.

(f) Open switch, K.

(g) Calculate the value of r_1 from

$$r_1 = \frac{E - V_1}{0.6}$$

(h) Adjust the rheostat until the ammeter reads 0.3 A. Record the voltmeter reading V_2.

Scanned with CamScanner

(i) Calculate the value of from

$$r_2 = \frac{E - V_2}{0.3}$$

(j) Find the value of r_3 from

$$r_3 = \frac{1}{2}(r_1 + r_2)$$

METHOD II

(a) Connect the circuit shown in figure **6**.

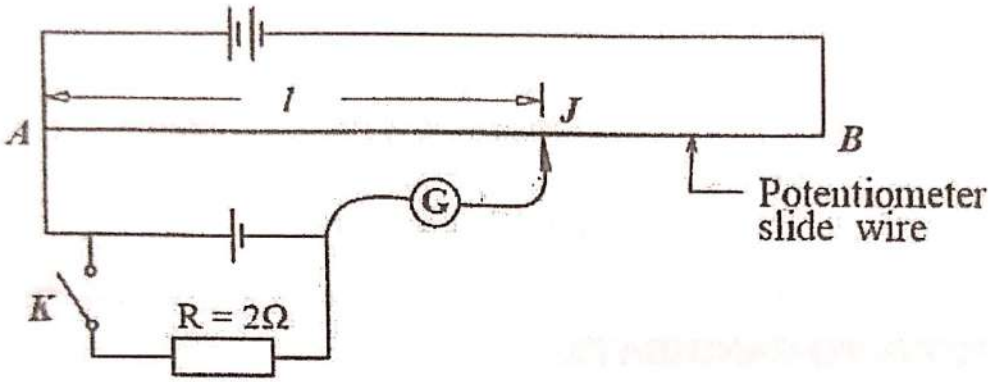

Fig. 6

(b) With switch, K open, locate the position on wire AB for which the galvanometer shows zero deflection.

(c) Read and record the balance length. l_o

(d) Close switch K.

(e) Locate the balance point, J on the wire AB.

(f) Record the new balance lengths, l.

(g) Open switch, K.

(h) Repeat procedures (d) to (g) for values of $R = 3, 5, 6, 7$ and 8Ω.

(i) Record your results in a suitable table including values of $\frac{l_o}{l}$ and $\frac{1}{R}$

(j) Plot a graph of $\frac{l_o}{l}$ against $\frac{1}{R}$.

(k) Find the slope, r_4 of the graph.

(l) Determine the value of, r, from the expression

$$r = \frac{r_3 + r_4}{2}$$

Scanned with CamScanner

UGANDA NATIONAL EXAMINATIONS BOARD

Uganda Advanced Certificate of Education

PHYSICS PRACTICAL INSTRUCTIONS

Paper P510/3 Inst.Sch.

November / December 2015

CONFIDENTIAL

Great care should be taken that the information given below does not reach the candidates either directly or indirectly.

INSTRUCTIONS FOR PREPARING APPARATUS

The candidates will be instructed not to write out a detailed description of the apparatus. But the teacher responsible for preparing the apparatus must give details(on the report form attached) about some of the items of apparatus he/she has supplied. The form should be signed by the invigilator, the teacher responsible for preparing the apparatus and the Headteacher

NB: The head teacher **must** ensure that the teacher responsible for preparing the apparatus hands in his/her trial results properly sealed in a separate envelope and **firmly** fastened (attached) to the candidates' script envelope(s)

©2015 Uganda National Examinations Board

Scanned with CamScanner

In addition to the apparatus ordinarily contained in a physics laboratory, each candidate will require:

Question 1

1 piece of thread (about 20 cm long).
1 stop clock (a stop watch will do).
1 30 g- mass (20 g + 10 g can do).
1 metre rule.
1 Vernier calliper.
1 micrometer screw gauge.
1 retort stand and clamp.
1 steel rod, 0.30 m long and about 0.007 m diameter.
1 piece of constantan wire (SWG 28), 0.800 m long.
2 pieces of wood each measuring about (5 cm × 5 cm × 0.5 cm).

Question 2

1 glass block (about 11 cm × 6 cm ×2 cm).
1 soft board.
1 plain white sheet of paper.
4 drawing pins (or pieces of sellotape).
4 optical pins.
1 Vernier calliper.
1 convex lens (focal length = 15.0 cm) in a holder.
1 plane mirror (mounted on a block of wood about 5 cm × 5 cm × 2 cm).
1 metre rule.
1 screen with a hole over which a wire gauze is mounted.
2 fresh dry cells (size D) in a holder.
1 torch bulb mounted in a holder.
1 white screen.
4 pieces of connecting wire each about 50 cm long.
1 switch.

Question 3

1 potentiometer.
1 metre rule.
1 piece of constantan wire (SWG 28), 100 cm long, labelled *W*.
2 pieces of sellotape.
2 fresh dry cells (size D) in holders.
3 crocodile clips.
1 voltmeter (0 – 3 V).
1 ammeter (0 – 1 A).
1 Jockey (crocodile clip can do)
1 5Ω standard resistor.
1 2 Ω standard resistor.
1 centre-zero galvanometer.
1 micrometer screw gauge.
2 switches labelled K_1 and K_2.
10 pieces of connecting wires each 50 cm long.

Scanned with CamScanner

P510/3
PHYSICS PRACTICAL
Paper 3
Nov./Dec.2015
3 ¼ hours

UGANDA NATIONAL EXAMINATIONS BOARD

Uganda Advanced Certificate of Education

PHYSICS PRACTICAL

Paper 3

3 hours 15 minutes

INSTRUCTIONS TO CANDIDATES:

Answer **Question 1** *and* **one** *other question.*

Any additional question answered will **not** *be marked.*

Candidates are **not** *allowed to use the apparatus for the* **first fifteen minutes.**

Graph paper is provided.

Mathematical tables and non-programmable scientific electronic calculators may be used.

Candidates are expected to record all their observations as they are made and plan the presentation of the records so that it is not necessary to make a fair copy of them. The working of the answers is to be handed in.

Details on the question paper should not be repeated in the answer, nor is the theory of the experiment required unless specifically asked for. Candidates should, however, record any special precautions they have taken and any particular feature of their methods of going about the experiment.

Marks are given mainly for a clear record of the observations actually made, for their suitability and accuracy and for the use made of them.

Scanned with CamScanner

1. In this experiment, you will determine the constant β, of the material of a wire using two methods. *(34 marks)*

METHOD I

(a) Record the mass M, of the steel rod labelled on it.

(b) Measure the length l, in metres of the steel rod.

(c) Tie a knot round the middle of the steel rod using one end of the bare wire provided.

(d) Suspend the rod by clamping the free end of the wire in a retort stand.

(e) Adjust the length y, to 0.650 m as shown in figure 1.

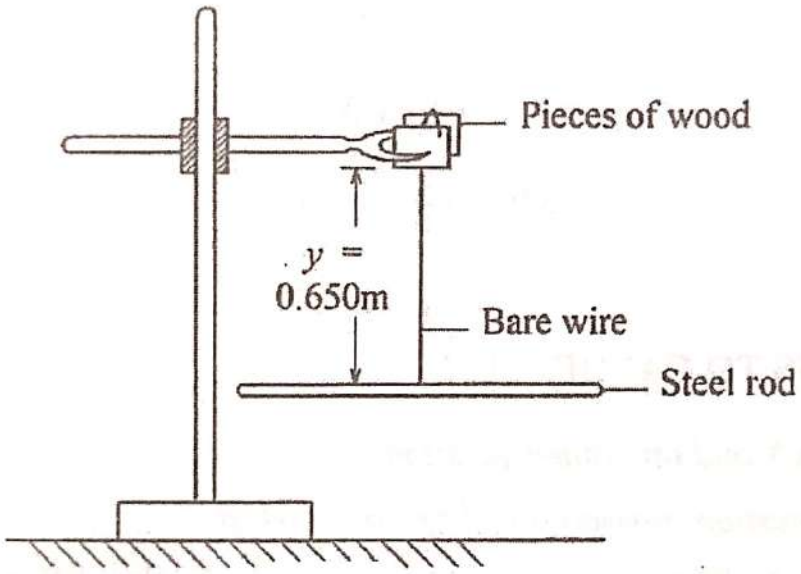

Fig.1

(f) Twist the rod through a small angle about the wire and release it to oscillate in a horizontal plane.

(g) Measure and record time for ten oscillations and determine the period T.

(h) Repeat procedures (e) to (g) for $y = 0.600, 0.550, 0.500, 0.450, 0.400$ and 0.350 m.

(i) Tabulate your results including values of T^2.

(j) Plot a graph of T^2 against y.

(k) Find the slope S, of your graph.

(l) Measure and record the diameter d, in metres of the wire.

(m) Calculate the constant n_1, from the expression:

$$n_1 = \frac{32}{3}\left(\frac{\pi M l^2}{S d^4}\right).$$

Scanned with CamScanner

METHOD II

(a) Untie the wire from the steel rod.

(b) Wind the wire round the steel rod to make a spiral spring.

(c) Slide off the spring from the steel rod.

(d) Measure and record the diameter D, in metres of the spring.

(e) Count the number of turns N, of the spring.

(f) Clamp one end of the spring between two pieces of wood as shown in figure 2.

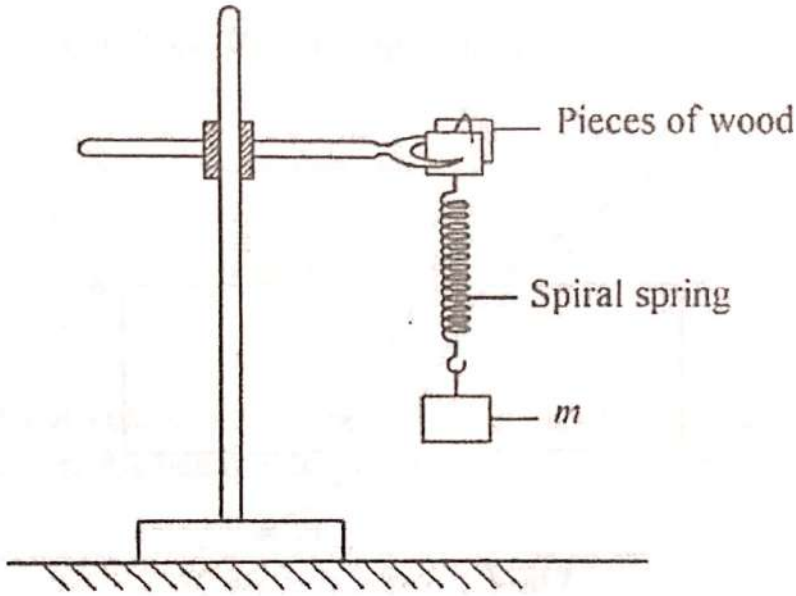

Fig. 2

(g) Suspend a mass $m = 30$ g from the free end of the spring using a piece of thread.

(h) Displace the mass through a small vertical distance and release it.

(i) Measure and record the time t, for ten oscillations.

(j) Calculate the constant n_2, from the expression:

$$n_2 = 3.2 \times 10^3 \left(\frac{\pi^2 N D^3 m}{t^2 d^4}\right).$$

(k) Find the value of the constant, β, using the expression:

$$\beta = \frac{1}{2}(n_1 + n_2)$$

Scanned with CamScanner

2. In this experiment, you will determine the refractive index n, of the material of the glass block provided using two methods. *(33 marks)*

METHOD I

(a) Measure and record the width W, of the glass block.

(b) Fix the plain white sheet of paper on the soft board using drawing pins (or sellotape).

(c) Place the glass block in the middle of the plain white sheet of paper with the broadest face upwards and trace its outline $ABCD$.

(d) Remove the glass block.

(e) Construct a perpendicular NQ, at Q, where $AQ = \frac{1}{4}(AB)$.

(f) Draw a line OQ such that the angle $i = 10^0$ as shown in figure 3.

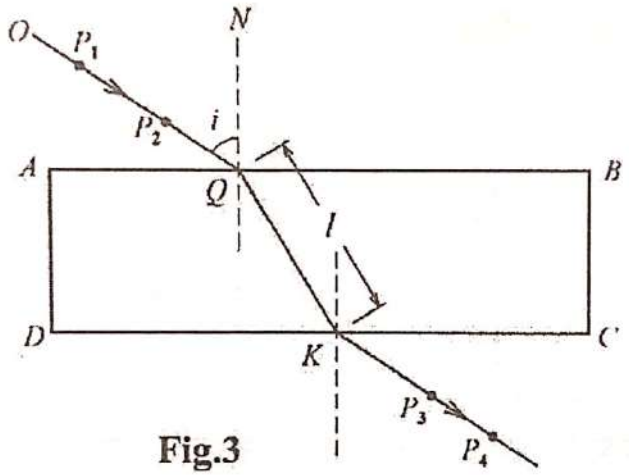

Fig.3

(g) Fix two optical pins P_1 and P_2 on the line OQ.

(h) While looking through the glass block from side CD, fix pins P_3 and P_4 such that they appear in line with the images of P_1 and P_2.

(i) Remove the glass block and the pins.

(j) Draw a line through P_3 and P_4 to meet CD at K.

(k) Join K to Q.

(l) Measure and record length, l, of KQ.

(m) Repeat the procedure from (f) to (l) for values of $i = 20^0, 30^0, 40^0, 50^0$ and 60^0.

(n) Tabulate your results including values of $\frac{1}{l^2}$ and $\sin^2 i$.

(o) Plot a graph of $\frac{1}{l^2}$ against $\sin^2 i$.

(p) Find the slope S, of the graph.

(q) Determine the intercept C, on the $\frac{1}{l^2}$ axis.

Scanned with CamScanner

(r) Calculate, n_1 from the expression:

$$n_1 = \sqrt{\frac{-C}{S}}$$

(KEEP YOUR TRACING FOR HANDING IN)

METHOD II

(a) Set up the apparatus as shown in figure 4.

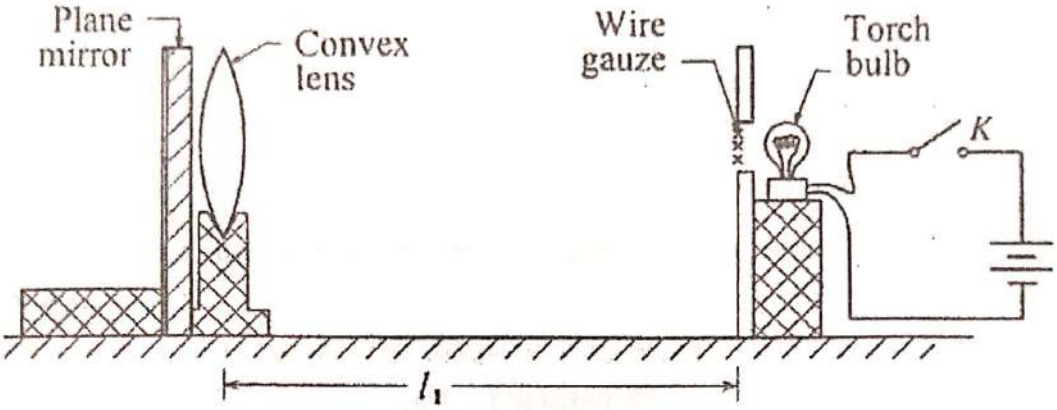

Fig. 4

(b) Close switch *K*.

(c) Move the convex lens and the plane mirror until a sharp image of the wire gauze forms besides the wire gauze.

(d) Measure and record the distance l_1, between the lens and the wire gauze.

(e) Open switch *K*.

(f) Place the glass block vertically between the lens and the wire gauze with the second largest face towards you and the smallest in contact with the bench as shown in figure **5**.

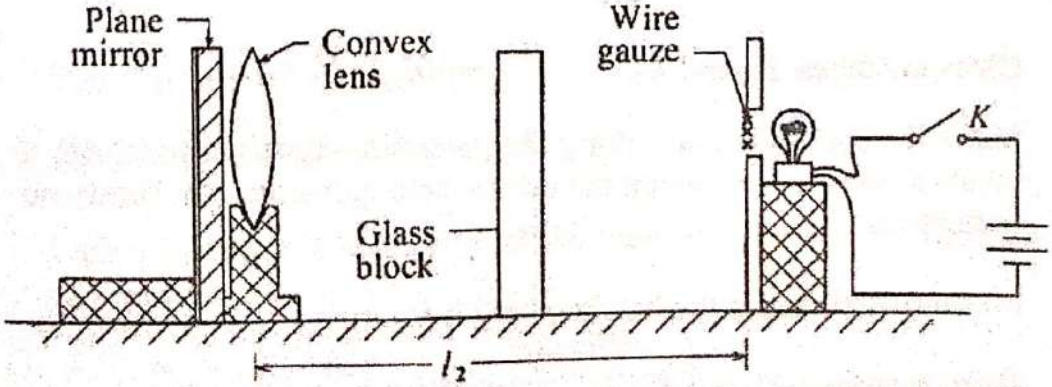

Fig. 5

(g) Close switch *K*.

Scanned with CamScanner

(h) Move the lens together with the plane mirror until a sharp image of the wire gauge is formed besides the wire gauge.

(i) Measure and record the distance l_2, between the lens and the wire gauze.

(j) Calculate the value of d, from $d = l_2 - l_1$.

(k) Determine the refractive index n_2, of the material of the glass block using the expression: $n_2 = \frac{w}{w-d}$

where w is the width of the glass block.

(l) Calculate n, from $n = \frac{n_1 + n_2}{2}$.

3. In this experiment, you will determine the resistivity ρ, of the wire labelled W, by two methods. *(33 marks)*

METHOD I

(a) Measure and record the diameter d, of the wire W.

(b) Starting with a length, $x = 0.200$ m of wire W, connect the circuit as shown in figure 6.

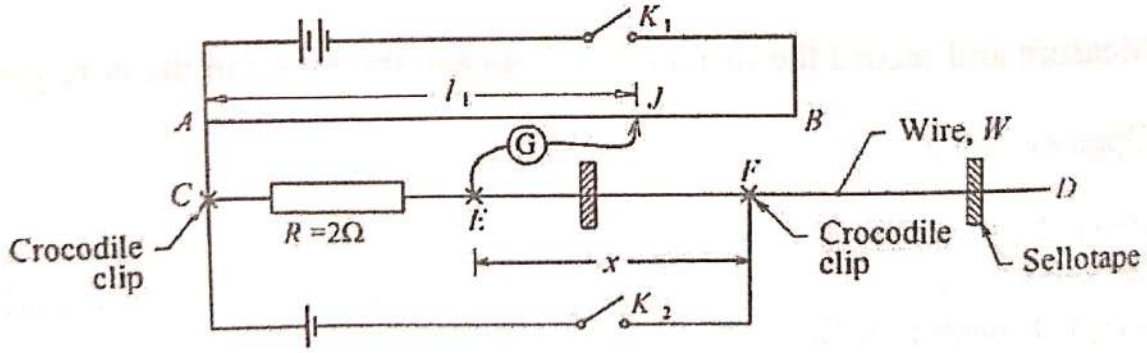

Fig.6

(c) Close switches, K_1 and K_2.

(d) Move the sliding contact along the potentiometer slide wire AB, to locate a point J, for which the centre-zero galvanometer shows no deflection.

(e) Measure and record the balance length l_1.

(f) Open switches K_1 and K_2.

Scanned with CamScanner

(g) Repeat the procedure from (b) to (f) for values of $x = 0.300$, 0.400, 0.500, 0.600 and 0.700 m.

(h) Disconnect A from C and connect it to E.

(i) Disconnect the galvanometer from E, and connect it to F, as shown in figure 7.

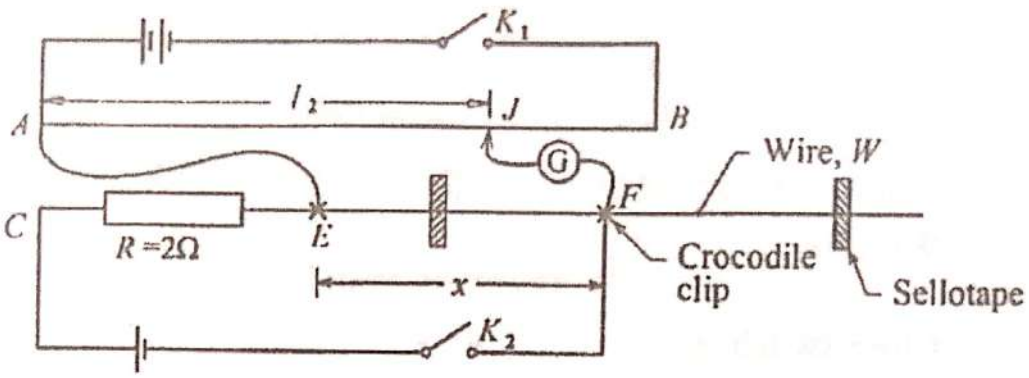

Fig.7

(j) Starting with a length $x = 0.200$ m, close switches K_1 and K_2.

(k) Move the sliding contact along the potentiometer slide wire AB to locate a point J, for which the centre-zero galvanometer G, shows no deflection.

(l) Measure and record the balance length l_2.

(m) Open switches K_1 and K_2.

(n) Repeat procedures (j) to (m) for values of $x = 0.300$, 0.400, 0.500, 0.600 and 0.700 m.

(o) Tabulate your results including values of $\frac{l_2}{l_1}$.

(p) Plot a graph of $\frac{l_2}{l_1}$ against x.

(q) Find the slope S, of the graph.

(r) Calculate the resistivity ρ, of the material of wire W from the expression

$$\rho = \frac{2\pi d^2 S}{4}.$$

Scanned with CamScanner

METHOD II

(a)

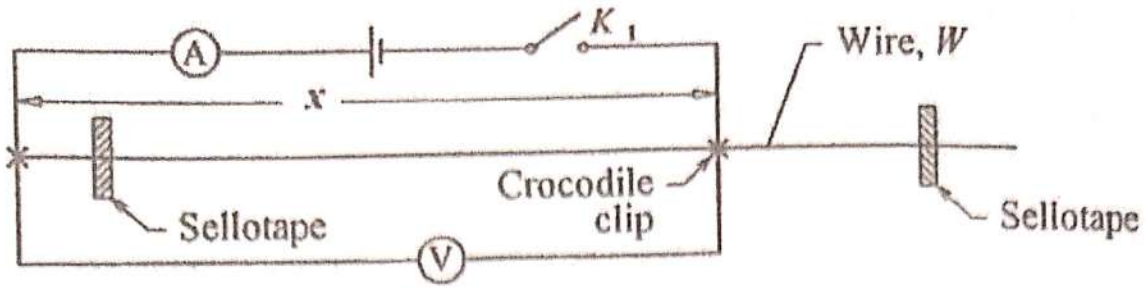

Fig.8

Connect the circuit shown in figure 8 with length $x = x_1 = 0.400$ m of Wire W.

(b) Close switch K_1.

(c) Read and record the ammeter reading I_1 and voltmeter reading V_1.

(d) Open switch K_1.

(e) Change the position of the crocodile clip so that the length $x = x_2 = 0.800$ m of wire W.

(f) Read and record the ammeter reading I_2 and voltmeter reading V_2

(h) Calculate the resistivity ρ, of the material of wire W, from the expression

$$\rho = \frac{\pi d^2 (V_2 I_1 + V_1 I_2)}{4(x_1 + x_2)(I_1 + I_2)}.$$

Scanned with CamScanner

UGANDA NATIONAL EXAMINATIONS BOARD

Uganda Advanced Certificate of Education

PHYSICS PRACTICAL INSTRUCTIONS

P510/3 Inst. Sch.

November / December 2016

CONFIDENTIAL

Great care should be taken that the information given below does not reach the candidates either directly or indirectly.

INSTRUCTIONS FOR PREPARING APPARATUS

The candidates will be instructed **not** to write out a detailed description of the apparatus. But the teacher responsible for preparing the apparatus **must** give details (on the report form attached) about some of the items of apparatus he/she has supplied. The form should be signed by the invigilator, the teacher responsible for preparing the apparatus and the head teacher.

[N.B: The head teacher **must** ensure that the teacher responsible for preparing the apparatus hands in his/her trial results properly sealed in a separate envelope and **firmly** fastened (attached) to the candidates' script envelope(s)]

Scanned with CamScanner

In addition to the apparatus ordinarily contained in Physics laboratory, each candidate will require:

Question 1

3 metre rules, one of them labelled *A*.
2 pieces of knitting thread of length about 150 cm each.
1 retort stand and clamp.
1 stop clock / stop watch.
1 100 g mass.
2 pieces of wooden blocks (5 cm × 3 cm × 3 cm).
2 helical spring (Nuffield type).
1 wooden knife edge.
Access to a weighing balance, reading to at least one decimal point.

Question 2

1 torch bulb (2.5 V, 0.3 A) in a holder having connecting wires.
2 1.5 V dry cells (size D) in holders.
1 wooden block of size 5 cm × 3 cm × 3 cm.
1 white screen.
1 metre rule.
1 vernier calipers.
1 250 ml glass beaker.
1 piece of paper 2 cm × 4 cm.
2 pieces of transparent sellotape.
1 plain sheet of paper.
1 complete mathematical set.
Access to clean water

Question 3

1 slide wire potentiometer.
1 ammeter (0 - 1 A).
1 centre zero galvanometer.
2 switches, labelled K_1 and K_2.
1 2 Ω resistor with label, *R*.
1 10 Ω resistor with label, R_Q.
3 1.5 V dry cells (size D) each in a holder.
1 rheostart labelled, *P*, (0 - 10 Ω).
1 sliding contact / Jockey.
1 piece of constantan wire (SWG 28), about 1.0 m long labelled, *W*.
1 micrometer screw guage.
1 metre rule.
2 pieces of sellotape.
2 crocodile clips.
13 pieces of connecting wires (each about 50 cm long).

Scanned with CamScanner

1. In this experiment, you will determine the moment of inertia, I, of the metre rule. *(34 marks)*

PART I

(a) Measure and record the mass, M, in kilograms of the metre rule marked A.

(b) Place the metre rule on a knife edge and locate the point, C, about which it balances.

(c) Tie two pieces of thread at points S and R, equidistant from C and a distance $d = 0.800$ m apart.

(d) Suspend the metre rule marked A, from a second metre rule using the two pieces of thread as shown in figure 1.

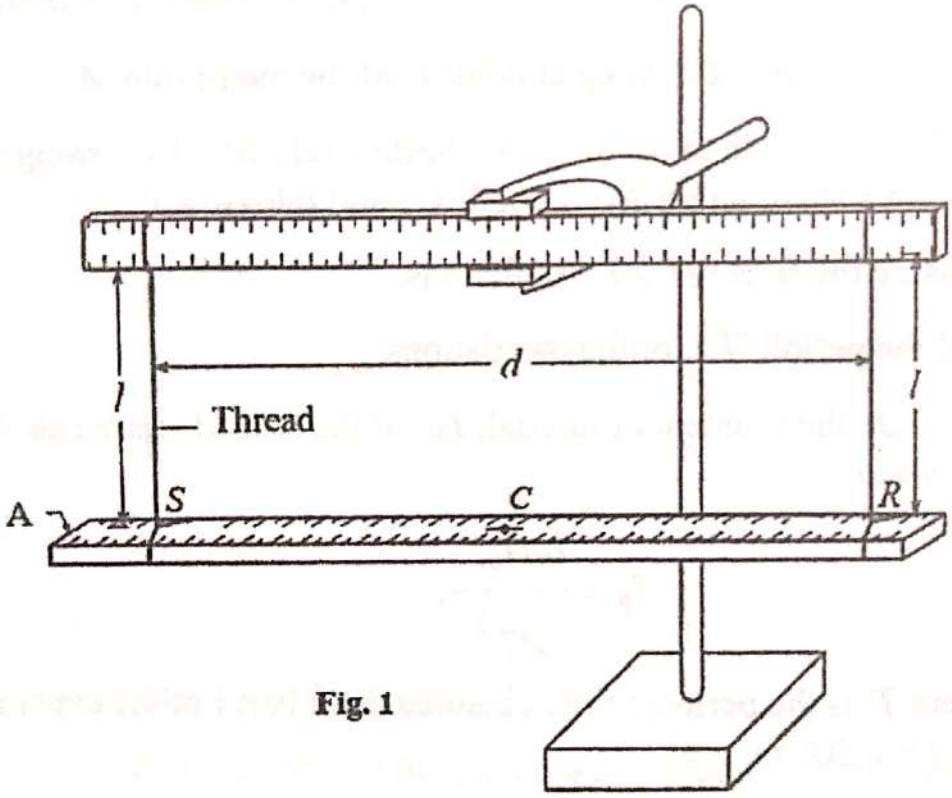

Fig. 1

(e) Adjust the lengths of thread, l, to 0.900 m.

(f) Twist the suspended metre rule, A about C through a small angle and release to oscillate in a horizontal plane.

(g) Measure and record the time for 20 complete oscillations.

(h) Find the period, T, of the oscillations.

(i) Repeat the procedure (e) to (h) for values of $l = 0.800$, 0.700, 0.600, 0.500 and 0.400 m.

Scanned with CamScanner

(j) Record your results in a suitable table including values of $T^2 d^2$.

(k) Plot a graph of $T^2 d^2$ against l.

(l) Find the slope, S, of the graph.

(m) Calculate, I, from the expression,

$$S = \frac{16\pi^2 I}{Mg}, \text{ where, } g = 9.81\text{ms}^{-2}.$$

PART II

(a) Using the set up in Part I, adjust the length of thread, l, to 0.500m.

(b) Place a mass $m = 0.100$ kg at point C of the metre rule A.

(c) Set the metre rule to oscillate in a horizontal plane by turning it through a small angle about point, C, and releasing it.

(d) Measure the time for 20 oscillations.

(e) Find the period, T_0, of the oscillations.

(f) Calculate the moment of inertial, I_0, of the loaded metre rule from the expression;

$$I_0 = \frac{ImT_0^2}{MT^2},$$

where T is the periodic time obtained from Part I of the experiment for $l = 0.500$ m.

DISMANTLE THE SET UP

Scanned with CamScanner

2. In this experiment, you will determine the power, P, of a cylindrical water lens by two methods. *(33 marks)*

METHOD 1

(a) Measure and record the external diameter, d, of the 250 ml glass beaker provided.

(b) Draw using a pen, a vertical line along the strip of paper provided.

(c) Stick the strip of paper vertically on the side of the glass beaker usin pieces of sellotape.

(d) Align the torch bulb, beaker and the screen such that the vertical line on the beaker faces you as shown in figure 2.

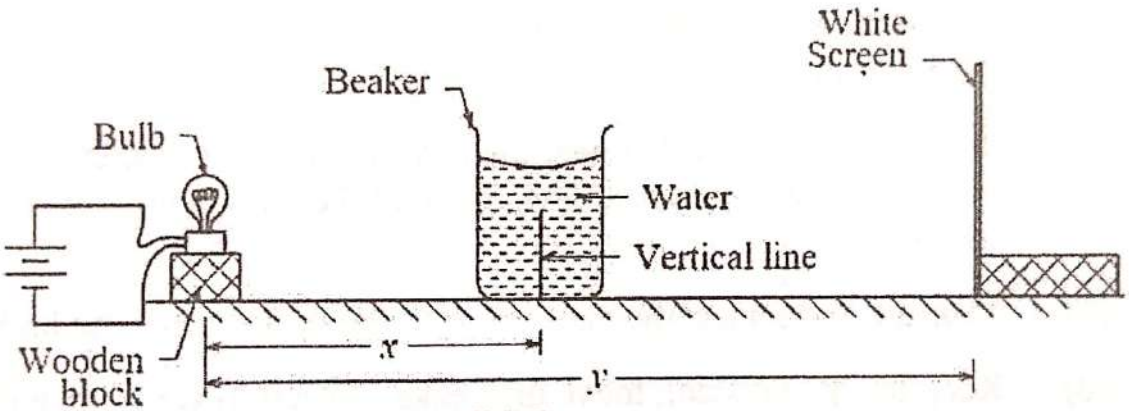

Fig. 2

(e) Pour water into the beaker up to the 250 ml mark.

(f) Adjust the distance, x, to 20.0 cm.

(g) Adjust the position of the screen until a sharp vertical line image of the bulb is formed on it.

(h) Measure and record the distance, y, of the screen from the bulb.

(i) Calculate the value of, P, from the expression,

$$P = \frac{y}{x(y-x)}.$$

(j) Repeat the procedure (f) to (i) for $x = 30.0$ cm.

(k) Calculate the average value of P.

DO NOT DISMANTLE THE SET UP

Scanned with CamScanner

METHOD II

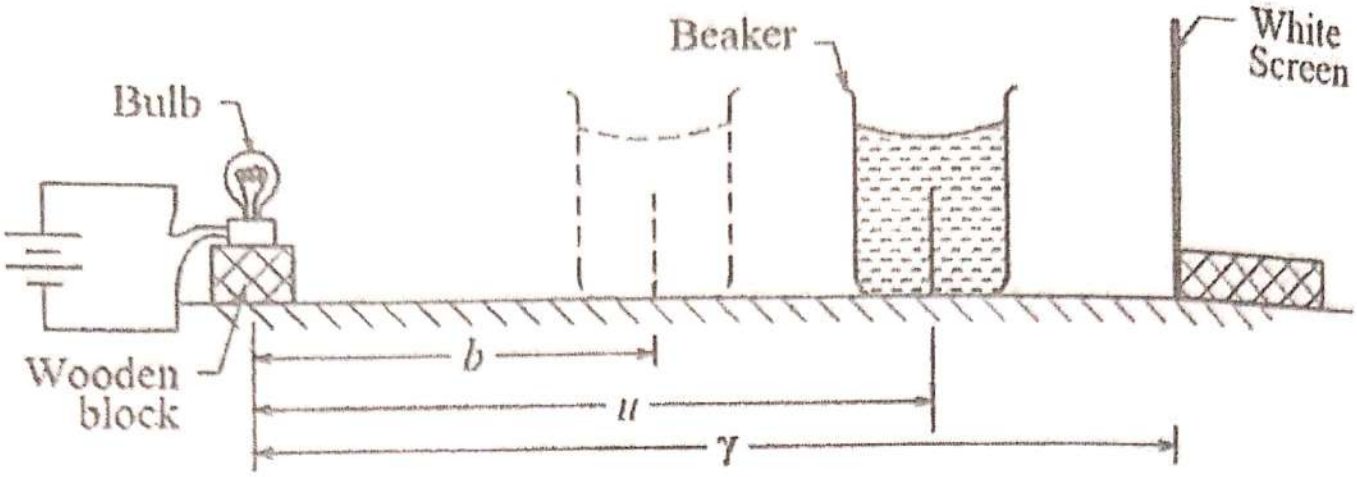

Fig. 3

(a) Adjust the distance between the bulb and the screen to $\gamma = 5\,d$ cm as shown in figure 3.

(b) Starting with the beaker near the screen, move the beaker towards the bulb until a sharp vertical line image of the bulb is formed on the screen.

(c) Measure and record the distance, u of the beaker from the bulb.

(d) Keeping, γ, constant, move the beaker further towards the bulb until another sharp image is formed on the screen.

(e) Measure and record the new distance, b, of the beaker from the bulb.

(f) Repeat the procedures (a) to (e) for values of $\gamma = 6d,\ 7d,\ 8d,\ 9d,$ and $10d$ cm.

(g) Tabulate your results including values of γ^2, $w = (u - b)$, w^2 and $z = (\gamma^2 - w^2)$.

(h) Plot a graph of z against γ.

(i) Find the slope, S, of the graph.

(j) Calculate the value of, P, from the expression,

$$P = \frac{4}{S}.$$

Scanned with CamScanner

3. In this experiment, you will determine the:

(i) potential difference per metre, t, of the potentiometer wire.

(ii) resistivity, ℓ, of the wire W.

(33 marks)

PART I

(a) Connect the circuit shown in figure 4.

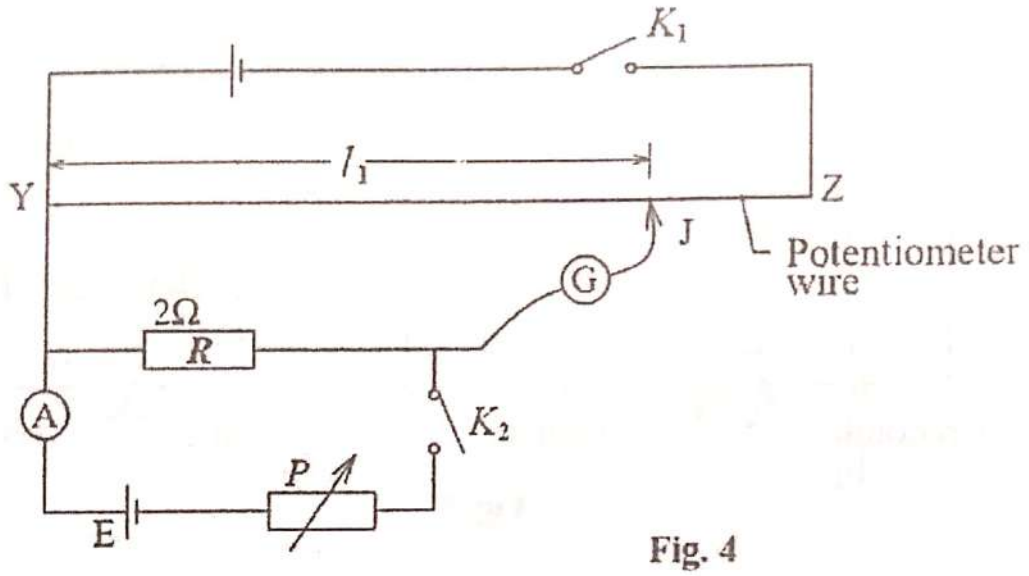

Fig. 4

(b) Close switch, K_2.

(c) Adjust the rheostat, P, so that the ammeter indicates a current, $I_1 = 0.12$ A.

(d) Close switch, K_1.

(e) Move the sliding contact, J, along the potentiometer wire YZ, to locate a point for which the galvanometer, G, shows no deflection.

(f) Read and record the balance length, l, in metres.

(g) Open switch, K_1.

(h) Repeat the procedure (c) to (e) for the ammeter reading $I_2 = 0.20$ A.

(i) Read and record the balance length, l_2, in metres.

(j) Open switches K_1 and K_2.

(k) Find the potential difference per metre, t, across the potentiometer wire from the expression

$$t = \frac{R}{2}\left[\frac{I_1}{l_1} + \frac{I_2}{l_2}\right].$$

Scanned with CamScanner

PART II

(a) Measure and record the diameter, d, of the wire, W, in metres.

(b) Connect the circuit shown in figure 5 with length, $x = 0.200$ m.

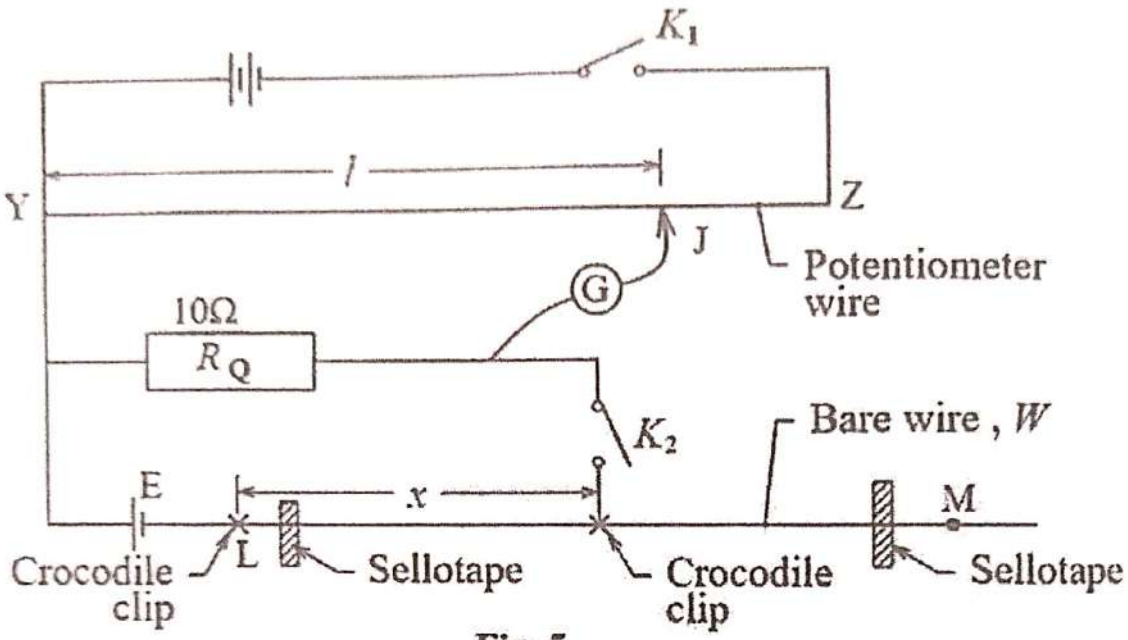

Fig. 5

(c) Close switches K_1 and K_2.

(d) Move the sliding contact, J, along the potentiometer wire YZ to locate a point for which the galvanometer, G, shows no deflection. .

(e) Read and record the balance length, l, in metres.

(f) Open switches K_1 and K_2.

(g) Repeat the procedure (b) to (f) for values of $x = 0.300, 0.400, 0.500, 0.600$ and 0.700 m.

(h) Tabulate your results including values of $\frac{1}{l}$.

(i) Plot a graph of $\frac{1}{l}$ against x.

(j) Find the slope, S, of the graph.

(k) Find the intercept, C, on the $\frac{1}{l}$- axis.

(l) Determine the resistivity, ℓ of the wire, W, from the expression;

$$\ell = \frac{\pi d^2 S R_Q}{4C}.$$

Scanned with CamScanner

UGANDA NATIONAL EXAMINATIONS BOARD

Uganda Advanced Certificate of Education

PHYSICS PRACTICAL INSTRUCTIONS

P510/3 Inst. Sch.

November / December 2017

CONFIDENTIAL

Great care should be taken that the information given below does not reach the candidates either directly or indirectly.

INSTRUCTIONS FOR PREPARING APPARATUS

The candidates will be instructed not to write out a detailed description of the apparatus. But the Teacher responsible for preparing the apparatus must give details (on the report form attached) about some of the items of apparatus he/she has supplied. The form should be signed by the invigilator, the Teacher responsible for preparing the apparatus and the Headteacher.

[**N.B:** The Headteacher must ensure that the teacher responsible for preparing the apparatus hands in his/her trial results properly sealed in a separate envelope and **firmly** fastened (attached) to the candidates' scripts envelope(s)]

Scanned with CamScanner

In addition to the apparatus ordinarily contained in Physics laboratory, each candidate will require:

Question 1

1 metre rule of mass about 100 g to 130 g.
1 half-metre rule.
2 helical spring (Nuffield type)
1 optical pin.
1 retort stand with two clamps.
1 100 g mass hanger.
1 50 g slotted mass.
2 100 g slotted masses.
1 knife edge (a prism can do).
1 wooden block (about 20 cm × 10 cm × 5 cm).
1 stop clock / stop watch.
3 pieces of thread (each about 30 cm long).

Question 2

1 glass block (about 11 cm × 6.2 cm × 2.0 cm).
5 optical pins.
4 drawing pins.
1 soft board.
2 plain sheets of white paper.
1 Vernier caliper.
1 complete mathematical set.
1 mounted plane mirror.
a small piece of plasticine.

Question 3

1 potentiometer slide wire.
1 1.5 V dry cell (size D) in a holder.
2 dry cells each 1.5 V (size D) in a holder / holders.
1 sliding contact.
1 centre zero galvanometer.
2 switches, labelled K_1 and K_2.
10 connecting wires each about 50 cm long.
1 ammeter (0 - 1 A).
1 voltmeter (0 - 3 V).
1 piece of nichrome wire 100 cm long mounted on a metre rule using sellotape, labelled, *W*.
1 10 Ω standard resistor with the value sealed labelled, R_s.
2 crocodile clips.

Scanned with CamScanner

1. In this experiment, you will determine the force constant K of the spiral spring provided. *(34 marks)*

PART I

(a) Place the metre rule on a knife edge with its graduated face upwards and locate its centre of gravity, C.

(b) Using sellotape, attach an optical pin at one end of the metre rule to act as a pointer.

(c) Tie one end of the spiral spring on the metre rule at the 99.0 cm mark.

(d) Suspend the spring by tying the free end to the rod of a clamp.

(e) Support the other end of the metre rule on a knife edge as shown in figure **1(a)**.

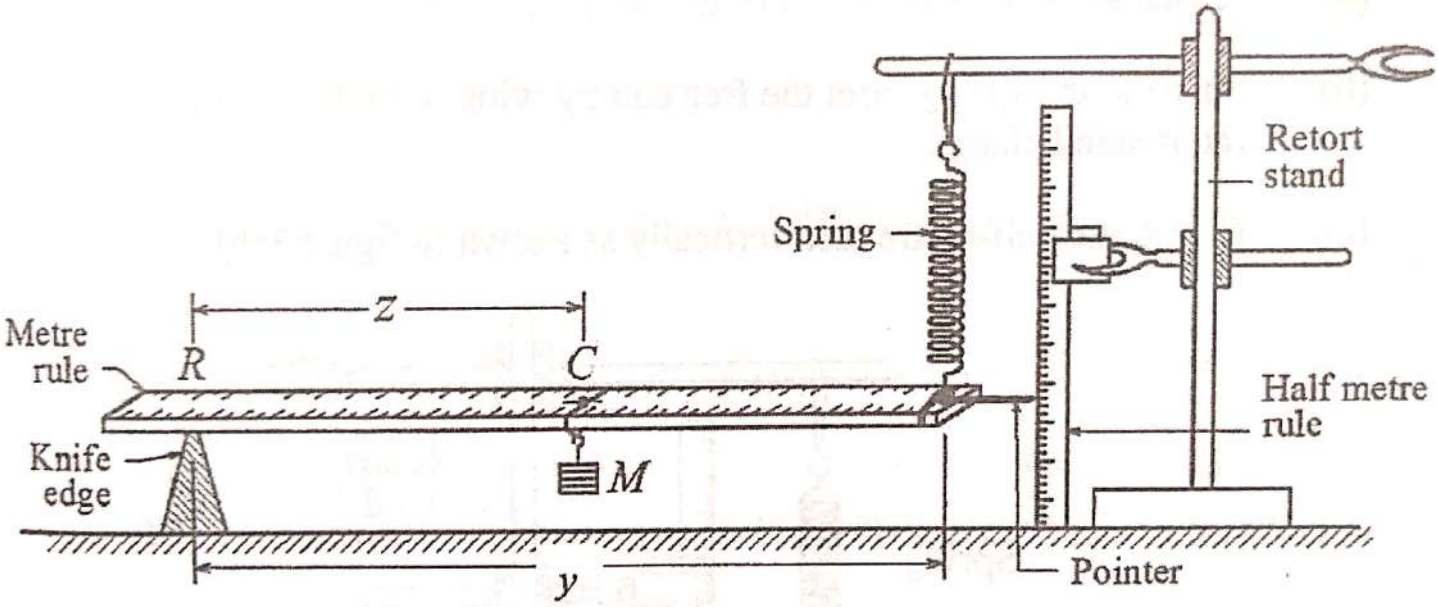

Fig. 1 (a)

(f) Adjust the position of the knife edge until the metre rule balances horizontally and the spring is vertical.

(g) Read and record the position of the pointer P_0 on the half metre rule.

(h) Suspend a mass, $M = 0.100$ kg on the metre rule at point C.

(i) Adjust the position of the knife edge until the metre rule balances horizontally with the spring vertical and the pointer back at its initial position, P_0 .

(j) Read and record the new position of the knife edge, R.

Scanned with CamScanner

(k) Measure and record the distance z and y of the mass and spring, respectively from, R.

(l) Repeat procedure (h) to (k) for values of $M = 0.150$, 0.200, 0.250, 0.300 and 0.350 kg.

(m) Tabulate your results in a suitable table including values of $\frac{y}{z}$

(n) Plot a graph of M against $\frac{y}{z}$.

(o) Find the slope S of the graph.

DISMANTLE THE SET-UP

PART II

(a) Attach a pointer to one end of the spring provided using a thread.

(b) Suspend the spring from the free end by tying it on the rod of the retort stand clamp.

(c) Clamp the half-metre rule vertically as shown in figure 1(b).

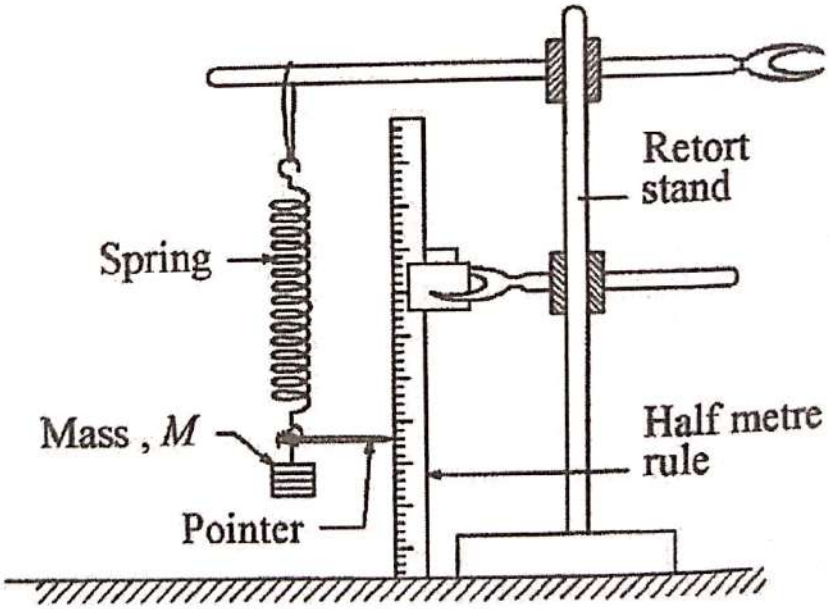

Fig. 1 (b)

(d) Read and record the position of the pointer y_0 in metres on the half-metre rule.

(e) Suspend a mass $M = 0.200$ kg from the spring.

(f) Read and record the new position of the pointer y in metres.

Scanned with CamScanner

(g) Find the extension, $y_1 = (y - y_0)$.

(h) Pull the mass vertically downwards through a small distance and release it to oscillate.

(i) Measure the time for 20 oscillations.

(j) Find the period, T_1.

(k) Repeat the procedure (d) to (g) for $M = 0.300$ kg and find y_2 and the period T_2.

(l) Find the value of G from the expression,

$$G = 4\pi^2 \left(\frac{y_2 - y_1}{T_2^2 - T_1^2} \right).$$

(m) Calculate K from the expression

$$K = \frac{SG}{e} \quad \text{where } e = 0.0221\text{m}.$$

2. In this experiment, you will determine the constant β of the glass block provided using two methods. *(33 marks)*

METHOD 1

(a) Fix a plain sheet of paper on the soft board using drawing pins.

(b) Place the glass block with its broad face on the paper and trace its outline *ABCD*.

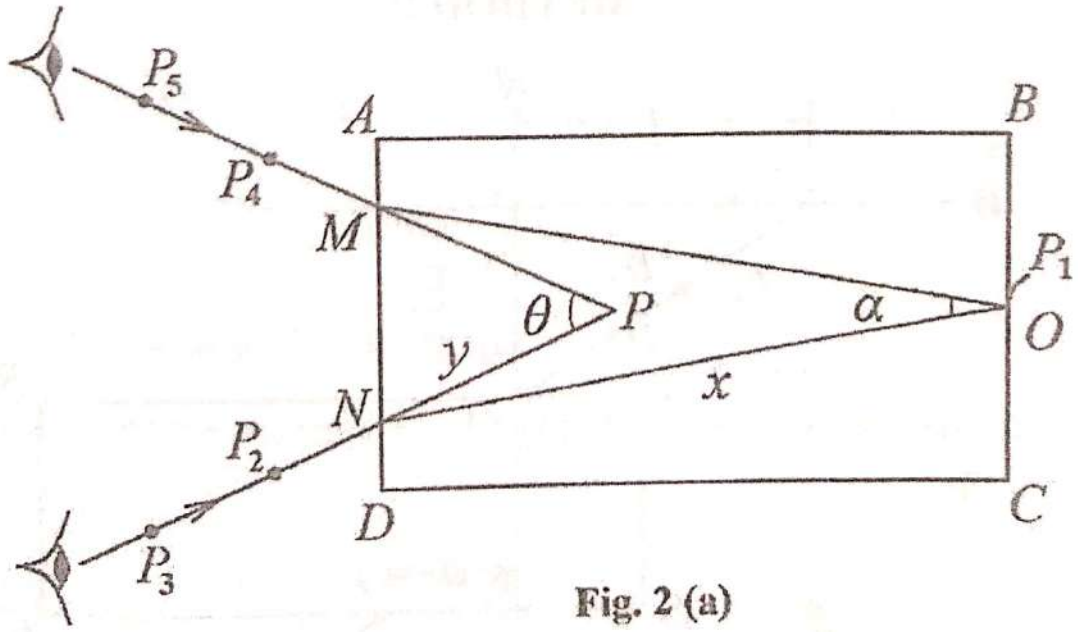

Fig. 2 (a)

(c) Remove the glass block from its outline and mark the mid-point O of side BC.

Scanned with CamScanner

(d) Replace the glass block on its outline and fix an optical pin P_1, vertically and close to side BC at O.

(e) While looking through the glass block from side AD, fix pins P_2 and P_3 such that they appear to be in line with the image of P_1. Mark the positions of P_2 and P_3.

(f) Remove pins P_2 and P_3.

(g) While looking from side AD again, fix pins P_4 and P_5 such that they are also in line with the image of P_1 as shown in figure 2(a). Mark the positions of P_4 and P_5.

(h) Remove pins P_4 and P_5.

(i) Remove the glass block and draw lines through P_3, P_2 and through P_5, P_4 to their point of intersection, P.

(j) Join O to M and also O to N.

(k) Measure and record angles α and θ.

(l) Measure and record distances $ON = x$ and $PN = y$.

(m) Calculate the constant β of the glass block from the expression

$$\beta = \frac{x \cos\left(\frac{\alpha}{2}\right)}{y \cos\left(\frac{\theta}{2}\right)}.$$

METHOD II

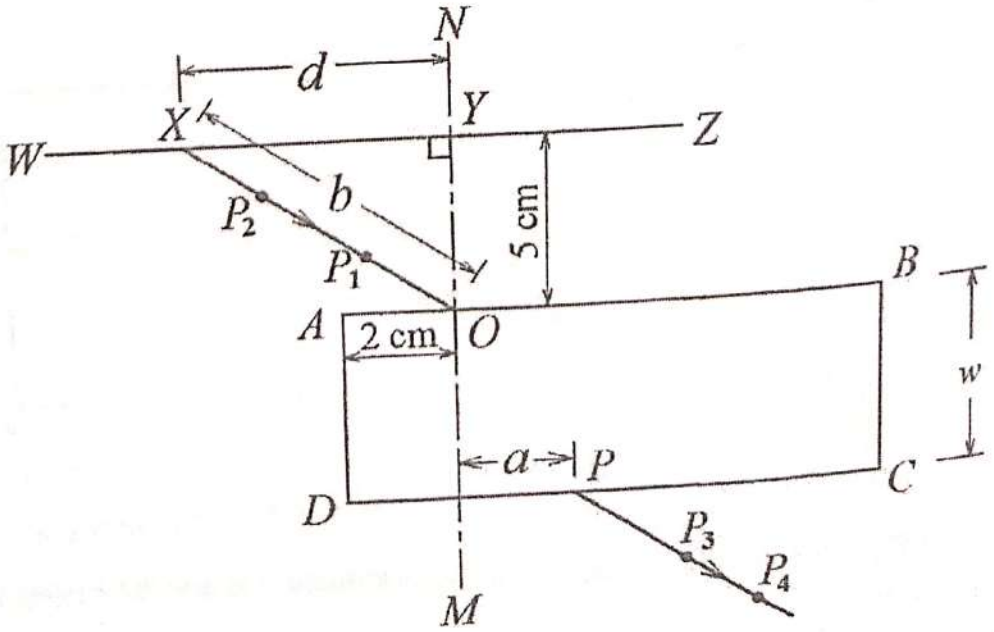

Fig. 2 (b)

Scanned with CamScanner

(a) Measure and record the width w of the glass block.

(b) Fix a plain sheet of paper on the soft board using drawing pins.

(c) Place the glass block on the paper with its broad face upper most and trace its outline $ABCD$.

(d) Remove the glass block from its outline and draw a normal NM at O such that $AO = 2.0$ cm.

(e) Draw a normal WZ at Y such that $YO = 5.0$ cm and $WY = 10.0$ cm.

(f) Draw a line XO such that $d = 2.0$ cm where $d = XY$.

(g) Replace the glass block on its outline.

(h) Fix pins P_1 and P_2 along XO.

(i) While looking through the glass block from side DC, fix pins P_3 and P_4 such that they appear to be in line with the images of pins P_1 and P_2.

(j) Remove the glass block and the pins.

(k) Draw a line through P_3 and P_4 to meet side DC at P as shown in figure **2(b)**.

(l) Measure and record distances a and b, where $b = XO$.

(m) Repeat procedure (f) to (l) for values of $d = 2.5,\ 3.0,\ 4.0,\ 6.0$ and 8.0 cm.

(n) Record your results in a suitable table including values of $\frac{1}{a^2}$ and $\frac{b^2}{d^2}$.

(o) Plot a graph of $\frac{b^2}{d^2}$ against $\frac{1}{a^2}$.

(p) Obtain the slope S of the graph.

(q) Calculate the constant β of the glass block from the expression,

$$S = \left(\frac{w}{\beta}\right)^2.$$

HAND IN YOUR TRACING TOGETHER WITH YOUR SCRIPT

Scanned with CamScanner

3. In this experiment, you will determine a constant k of the resistor marked R_S.

(33 marks)

(a) Connect the circuit shown in figure **3(a)**.

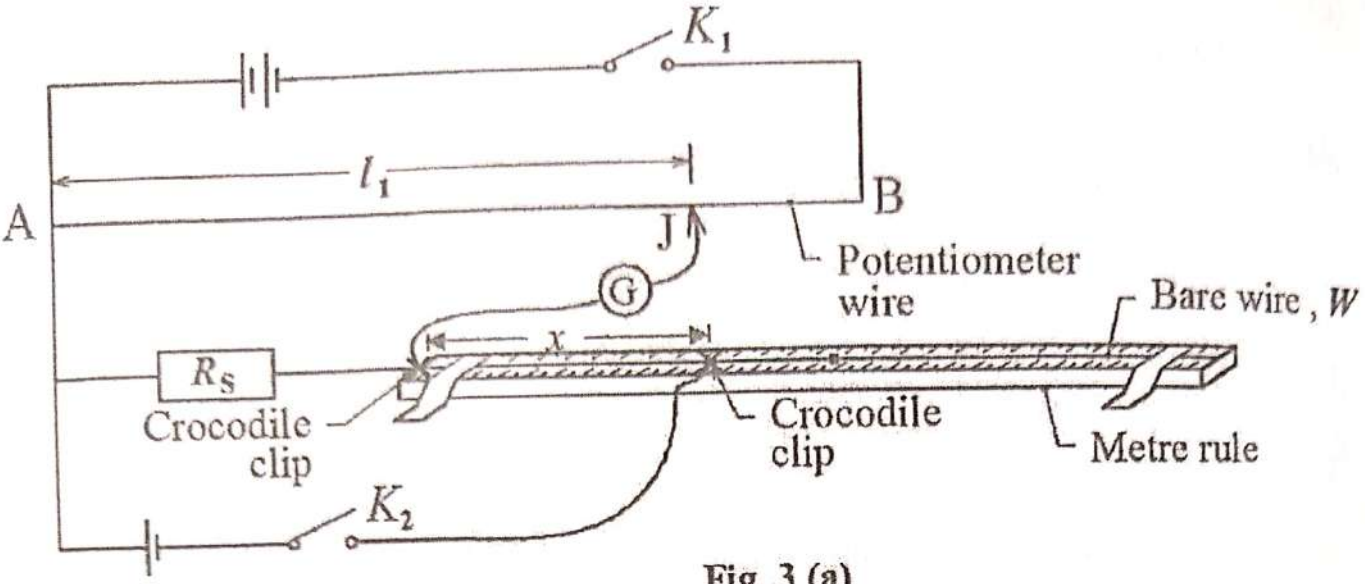

Fig. 3 (a)

(b) Adjust the length x to 0.200 m.

(c) Close switches K_1 and K_2 .

(d) Move the sliding contact J along the potentiometer slide wire AB until a point is found where the centre zero galvanometer G shows no deflection.

(e) Read and record the balance length, l_1 .

(f) Open switches K_1 and K_2.

(g) Repeat procedure (b) to (f) for values of $x = 0.300,\ 0.400,\ 0.500,\ 0.600,\ 0.700$ and 0.800 m.

(h) Dismantle the circuit.

(i) Connect the circuit shown in figure **3(b)**.

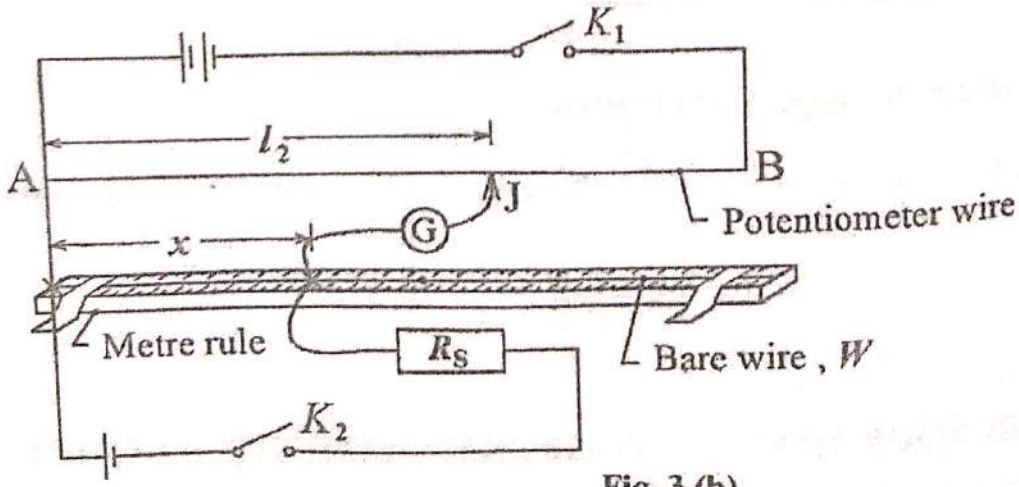

Fig. 3 (b)

Scanned with CamScanner

(j) Adjust the length x to 0.200 m.

(k) Close switches K_1 and K_2.

(l) Move the sliding contact J along the potentiometer wire AB until a point is found when the centre zero galvanometer G shows no deflection.

(m) Measure and record the balance length, l_2.

(n) Open switches K_1 and K_2.

(o) Repeat procedures (j) to (n) for values of $x = 0.300,\ 0.400,\ 0.500,\ 0.600,\ 0.700$ and 0.800 m.

(p) Record your results in a suitable table including values of $\frac{l_2}{l_1}$.

(q) Plot a graph of x against $\frac{l_2}{l_1}$.

(r) Obtain the slope S of the graph.

(s) Find the constant, k of the resistor R_S from,

$$k = 10S.$$

Scanned with CamScanner

UGANDA NATIONAL EXAMINATIONS BOARD

Uganda Advanced Certificate of Education

PHYSICS PRACTICAL INSTRUCTIONS
P510/3 Inst.Sch.

November / December 2018

CONFIDENTIAL

Great care should be taken that the information given below does NOT reach the candidates either directly or indirectly.

INSTRUCTIONS FOR PREPARING APPARATUS

The candidates will be instructed **not** to write out a detailed description of the apparatus. But the teacher responsible for preparing the apparatus **must** give details (on the report form attached) about some of the items of the apparatus he/she has supplied. The form should be signed by the invigilator, the teacher responsible for preparing the apparatus and the Headteacher.

[N.B: The Headteacher **must** ensure that the teacher responsible for preparing the apparatus hands in his/her trial results properly sealed in a separate envelope and **firmly** fastened (attached) to the candidates' scripts envelope(s).]

Scanned with CamScanner

In addition to the apparatus ordinarily contained in a Physics laboratory, each candidate will require:

Question 1

2	half-metre rules
1	knife edge.
1	stop clock.
1	Vernier callipers
1	metre rule
1	20 g mass
4	pieces of knitting thread each about 50 cm long.
2	retort stands and clamps.
2	spiral springs (Nuffield type).
1	optical pin.
1	piece of masking tape.
6	slotted 50 g masses or three 100 g slotted masses and one 50g slotted mass.

Question 2

1	rectangular glass block measuring about 11 cm × 6 cm × 2 cm
1	plain white sheet of paper.
1	soft board.
4	optical pins.
4	drawing pins.
1	complete mathematical set.

Question 3

1	voltmeter (0 - 3V) or (0 - 5 V)
1	ammeter (0 - 1A)
1	fresh dry cell (size D, 1.5 V each) in a holder.
1	switch labelled K.
1	metre rule
1	metre bridge
1	piece of Nichrome wire (SWG 28) of length 0.540 m labelled Z.
1	piece of constantan wire (SWG 28) of length 1.00 m labelled W.
1	micrometer screw gauge.
1	centre zero galvanometer.
1	5 Ω - standard resistor.
2	crocodile clips
8	pieces of connecting wire each about 50 cm long.
2	pieces of sellotape.

Scanned with CamScanner

1. In this experiment, you will determine a property, γ of the half-metre rule provided by two methods. *(34 marks)*

METHOD I

(a) Balance the half-metre rule provided horizontally on a knife edge.

(b) Read and record the balance point G.

(c) Suspend the half-metre rule from the retort stand clamp with its scale facing upwards using a piece of thread.

(d) Suspend a mass $m_1 = 0.050$ kg from the 2.0 cm mark of the half-metre rule.

(e) Suspend a mass $m_2 = 0.020$ kg from the opposite side of the thread of suspension at the 35.0 cm mark of the half-metre rule as shown in figure 1.

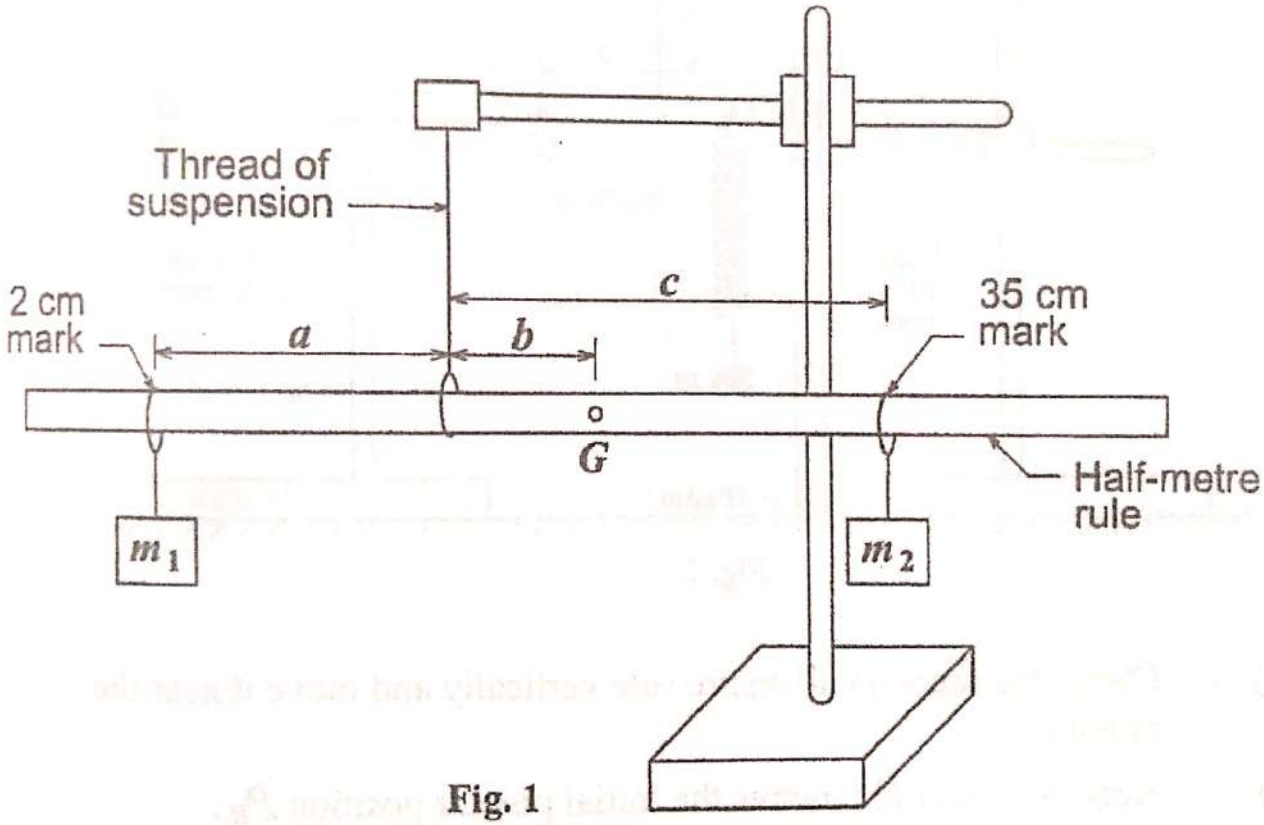

Fig. 1

(f) Adjust the position of the thread of suspension of the half-metre rule until it balances horizontally.

(g) Measure and record the distances a, b and c.

(h) Leave the set-up undisturbed.

(i) Calculate the value of, γ_1 from the expression;

$$\gamma_1 = \frac{5a-2c}{100b}.$$

Scanned with CamScanner

METHOD II

(a) Attach a pointer to one end of the spiral spring using masking tape.

(b) Remove the masses m_1 and m_2 from the half-metre rule in the set-up you used in method I.

(c) Suspend the spring from 2.0 cm mark of the half-metre rule using a piece of thread.

(d) Adjust the position of the thread of suspension of the half-metre rule until it balances as shown in figure 2.

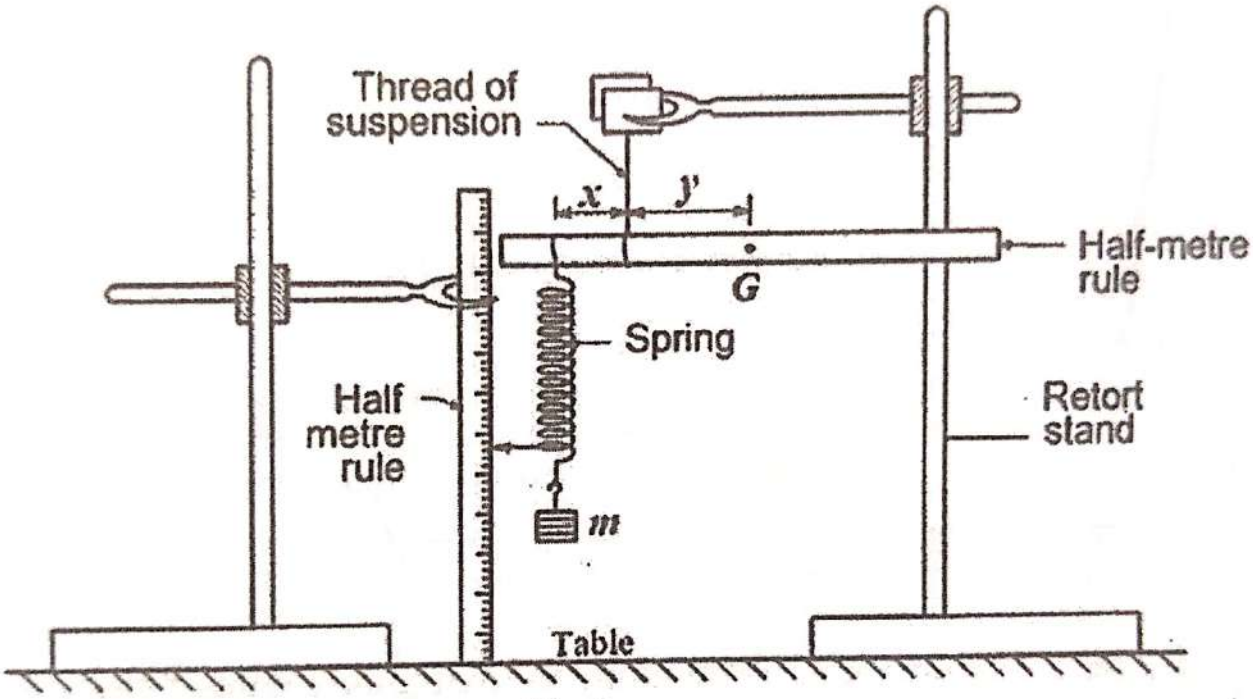

Fig. 2

(e) Clamp the second half-metre rule vertically and move it near the pointer.

(f) Read and record in metres the initial pointer position P_0.

(g) Suspend a mass $m = 0.050$ kg from the lower end of the spring and adjust the position of the thread of suspension of the half-metre rule until it balances horizontally.

(h) Read and record in metres the new pointer position, P_1.

(i) Read and record the distances x and y.

Scanned with CamScanner

(j) Calculate the extension, e, of the spring in metres.

(k) Repeat the procedure (g) to (j) for values of $m = 0.100,\ 0.150,\ 0.200,\ 0.250,$ and 0.300 kg.

(l) Record your results in a suitable table including values of $\frac{y}{x}$.

(m) Plot a graph of e against $\frac{y}{x}$.

(n) Find the slope, S, of the graph.

(o) Calculate the value of k from the expression;

$$k = \frac{mg}{e_1}.$$

where e_1 is the value of the extension, e corresponding to mass $m = 0.300$ kg in your table of results and $g = 9.81\ \text{ms}^{-2}$.

(p) Calculate the value of, γ_2 from the expression;

$$\gamma_2 = \frac{Sk}{g}$$

where $g = 9.81\ \text{ms}^{-2}$.

(q) Calculate the value of γ from the expression

$$\gamma = \frac{1}{2}(\gamma_1 + \gamma_2)$$

Scanned with CamScanner

2. In this experiment, you will determine the property, β, of the glass block provided. *(33 marks)*

(a) Fix a plain sheet of white paper on a soft board using drawing pins.

(b) Place the glass block centrally on the sheet of paper with its largest face uppermost.

(c) Trace the outline of the glass block $ABCD$, as shown in figure 3.

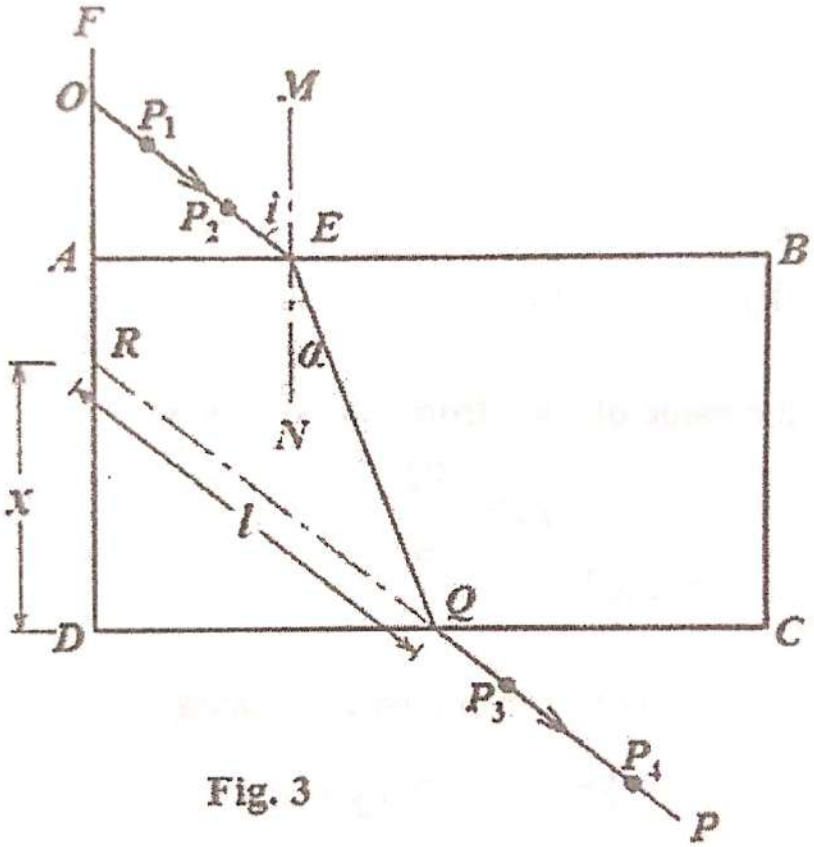

Fig. 3

(d) Remove the glass bock.

(e) Extend DA to a point F about 7 cm from A.

(f) Draw a normal, MN at E, a distance about ¼ AB.

(g) Draw a line OE at an angle $i = 15^0$ to the normal MN.

(h) Replace the glass block on its outline.

Scanned with CamScanner

(i) Fix pins P_1 and P_2 vertically along line OE.

(j) While looking through the glass block from side DC, fix pins P_3 and P_4 such that they appear to be in line with the images of P_1 and P_2.

(k) Remove the glass block and the pins.

(l) Draw a line through P_3 and P_4 to meet DC at Q and produce PQ to meet DF at R.

(m) Join Q to E.

(n) Measure and record the distances x and l and angle α.

(o) Replace the glass block and repeat procedure (g) to (n) for values of $i = 25^0,\ 35^0,\ 45^0,\ 55^0$ and 65^0.

(p) Tabulate your results including values of $sin^2\alpha$ and $\frac{x^2}{l^2}$.

(q) Plot a graph of $sin^2\alpha$ against $\frac{x^2}{l^2}$.

(r) Determine the slope, S, of the graph.

(s) Calculate the value of, β_1, from the expression

$$\beta_1 = \sqrt{\frac{-1}{S}}.$$

(t) Read and record the intercept, C, on the $sin^2\alpha$ - axis.

(u) Calculate the value of, β_2, from the expression

$$\beta_2 = \sqrt{\frac{1}{C}}.$$

(v) Find the value of the constant, β, from the expression;

$$2\beta = (\beta_1 + \beta_2).$$

HAND IN YOUR TRACING TOGETHER WITH YOUR SCRIPT

Scanned with CamScanner

3. In this experiment, you will determine a constant, α of the wire labelled, W.

(*33 marks*)

PART I

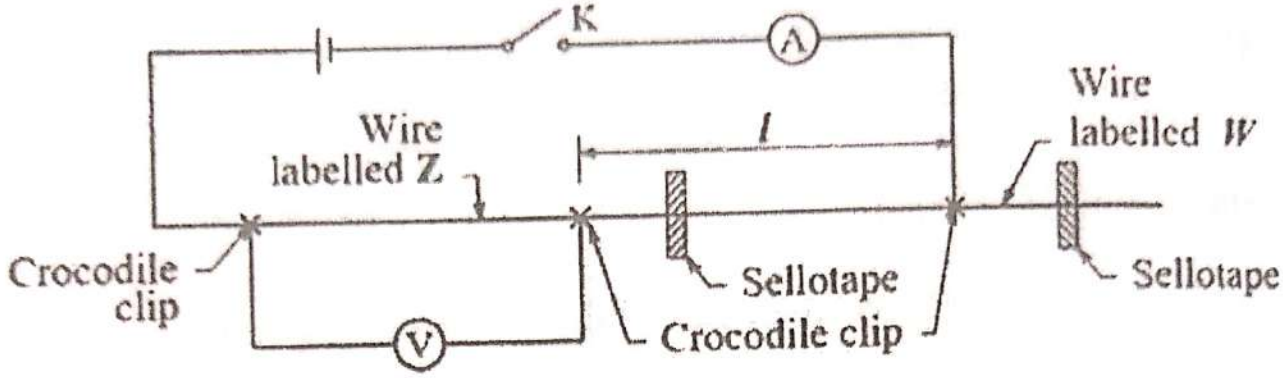

Fig. 4

(a) Connect the circuit shown in figure 4 such that length, l, of the bare wire $W = 0.100$ m. Make sure that the length of wire Z connected is 0.500 m.

(b) Close switch, K.

(c) Read and record the ammeter reading I_1 and the voltmeter reading V_1.

(d) Repeat procedure (a) and (b) for $l = 0.500$ m.

(e) Read and record the ammeter reading I_2 and voltmeter reading V_2.

(f) Repeat procedure (a) to (b) for $l = 0.700$ m.

(g) Read and record the ammeter reading I_3 and voltmeter reading V_3.

(h) Find the resistance, R, of Z from the expression,

$$R = \frac{1}{3}\left[\frac{V_1}{I_1} + \frac{V_2}{I_2} + \frac{V_3}{I_3}\right].$$

DISMANTLE THE APPARATUS

Scanned with CamScanner

PART II

(a) Measure and record, in metres, the diameter , d, of the wire labelled W.

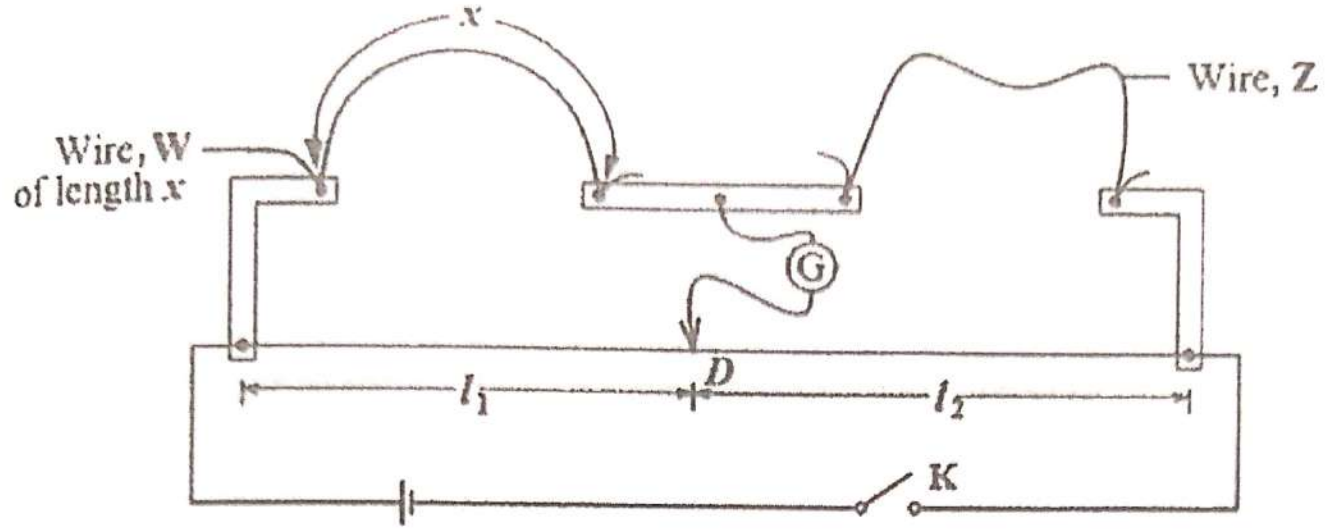

Fig. 5

(b) Connect the circuit as shown in figure 5. Make sure that the length of Z connected is 0.500 m.

(c) Starting with a length $x = 0.200$ m of wire , W, close switch K.

(d) Move the sliding contact along the bridge wire to a point D where the galvanometer shows no deflection.

(e) Read and record the balance length, l_1, and l_2 .

(f) Open switch K.

(g) Repeat procedure (c) to (f) for values of $x = 0.300,\ 0.400,\ 0.500,$ 0.600 and 0.700 m.

(h) Record your results in a suitable table including values of $\frac{l_1}{l_2}$ and

$$R_X = R\frac{l_1}{l_2}$$

(i) Plot a graph of R_X against x.

(j) Find the slope, S, of the graph.

(k) Calculate the constant , α, from the expression

$$\frac{1}{S} = \frac{\pi d^2}{4\alpha}$$

DISMANTLE THE APPARATUS

Scanned with CamScanner

P510/3 Inst.Sch.
PHYSICS
(Practical)
INSTRUCTIONS
Nov./Dec. 2019

UGANDA NATIONAL EXAMINATIONS BOARD

Uganda Advanced Certificate of Education

PHYSICS PRACTICAL INSTRUCTIONS
P510/3 Inst.Sch.

November / December, 2019

CONFIDENTIAL:

Great care should be taken that the information given below does NOT reach the candidates either directly or indirectly.

INSTRUCTIONS FOR PREPARING APPARATUS

The candidates will be instructed **not** to write out a detailed description of the apparatus. The teacher responsible for preparing the apparatus **must** give details (on the report form attached) about some of the items of the apparatus he/she has supplied. The form should be signed by the invigilator, the teacher responsible for preparing the apparatus and the Head teacher.

N.B: The Head teacher **must** ensure that the teacher responsible for preparing the apparatus hands in his/her trial results properly sealed in a separate envelope and firmly fastened (attached) to the candidates' scripts' envelope(s)

Scanned with CamScanner

In addition to the apparatus ordinarily contained in a Physics laboratory, each candidate will require:

Question 1

1 pendulum bob with a hook.
1 spiral spring (Nuffield type) with a pointer attached.
1 stop clock.
2 100 g slotted masses on a 100 g mass hanger.
2 metre rules.
1 retort stand (at least 65 cm high).
1 piece of knitting thread 120.0 cm long, labelled ***A***.
1 piece of knitting thread 44.0 cm long, labelled ***C***.
1 piece of knitting thread 120.0 cm long, labelled ***B***.
2 pieces of wood (2.5 cm × 2.5cm).

Question 2

1 converging lens (focal length 10 cm), labelled ***P***.
1 diverging lens (focal length 15.0 cm), labelled ***D***.
1 lens holder.
1 half-metre rule.
1 metre rule.
1 switch, labelled ***K***.
1 white screen.
1 torch bulb (3.8V, 0.30A).
1 screen with a hole over which a wire gauze is mounted.
1 plane mirror.
2 fresh dry cells (size D) each 1.5 volts in holders.
3 connecting wires each about 50.0 cm long.
4 small pieces of clear sellotape
A piece of plasticine.

Question 3

1 ammeter (0 - 1A)
2 fresh dry cells (size D, 1.5V each) in cell holders.
2 switches (tap switch).
1 sliding contact (crocodile clip can do).
1 metre rule.
1 micrometer screw gauge.
1 metre bridge.
1 centre zero galvanometer.
4 pieces of sellotape.
8 pieces of connecting wire each about 50 cm long, with four of them having crocodile clips.
100 cm of constantan wire (SWG 28), labelled ***P***.
100 cm of constantan wire (SWG 30), labelled ***Q***.

Scanned with CamScanner

1. In this experiment you will determine the;

(i) acceleration due to gravity, g.

(ii) distance, d, from the centre of the pendulum bob to the point of suspension using two methods.

(40 marks)

METHOD 1

(a) Tie one end of the thread labelled A at the 10.0 cm mark of a metre rule and the other end at the 90.0 cm mark making sure that the thread is straight and the distance, x between the marks is 0.800 m.

(b) Tie the thread labelled C, to make a loop round the thread labelled A, leaving 2.0 cm on either end.

(c) Hang the pendulum bob on the loop.

(d) Clamp the metre rule with its graduated face towards you as shown in figure 1.

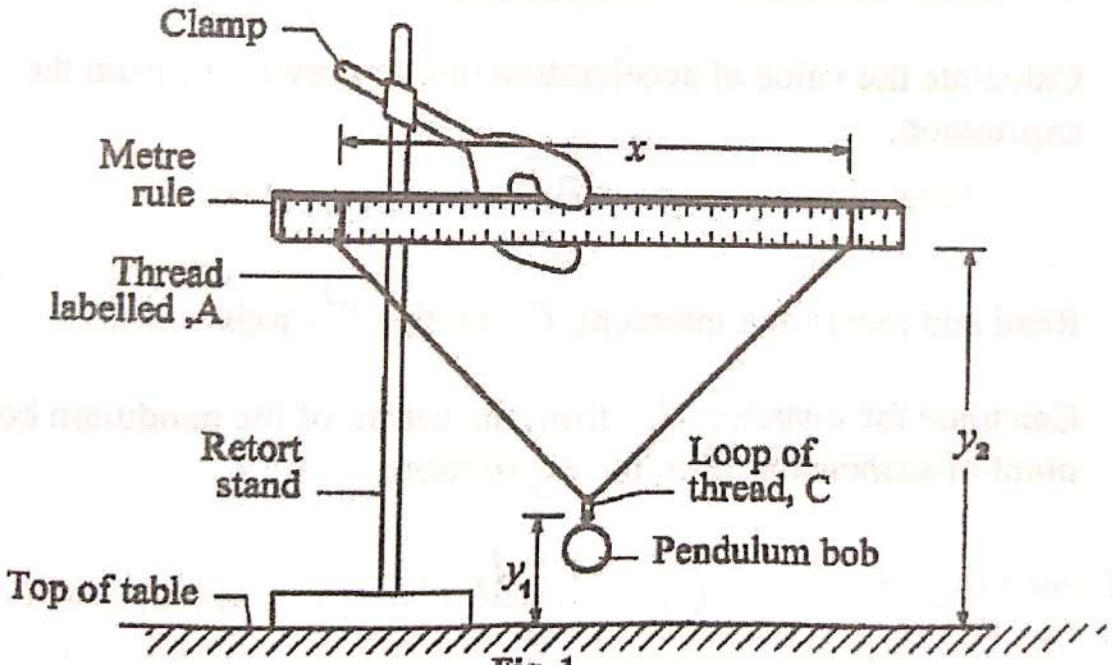

Fig. 1

(e) Adjust the loop to the midpoint of thread A.

(f) Measure and record the distance y_2 in metres from the top of the table to the clamped metre rule.

Scanned with CamScanner

(g) Measure and record the distances y_1 in metres from the top of the table to the point of suspension of the pendulum bob.

(h) Find the value $y = y_2 - y_1$.

(i) Displace the pendulum bob through a small angle towards you and release it to oscillate.

(j) Measure and record the time, t, for 20 oscillations.

(k) Find the period, T.

(l) Repeat procedure (g) to (k) by adjusting x to 0.700, 0.600, 0.500, 0.400, and 0.300 m.

(m) Tabulate your results including values of T^2.

(n) Plot a graph of T^2 against y.

(o) Determine the slope, S, of the graph.

(p) Calculate the value of acceleration due to gravity, g, from the expression;

$$S = \frac{4\pi^2}{g}.$$

(q) Read and record the intercept, C, on the T^2 - axis.

(r) Calculate the distance, d_1, from the centre of the pendulum bob to the point of suspension from the expression;

$$C_1 = \frac{4\pi^2 d_1}{g}$$

METHOD II

(a) Tie one end of the thread labelled B to the hook of the pendulum bob.

(b) Tie the other end to a clamp between the two pieces of wood such that the length $l = 100.0$ cm as shown in figure 2.

Scanned with CamScanner

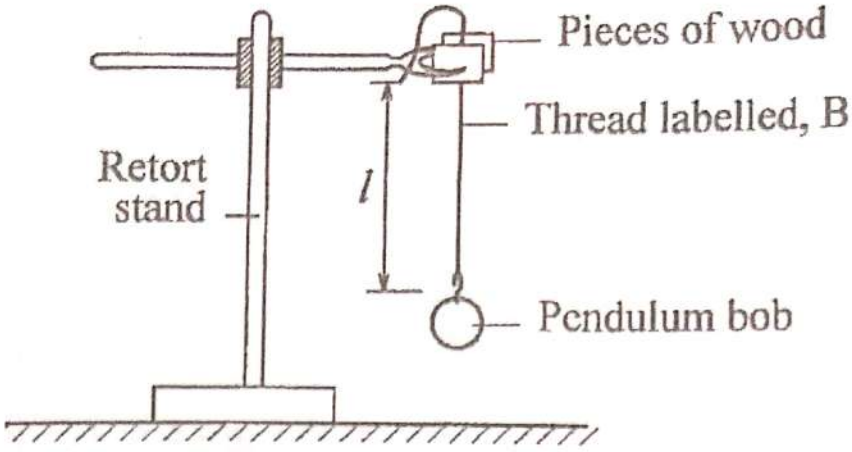

Fig. 2

(c) Displace the pendulum bob through a small angle towards you and release it to oscillate.

(d) Measure and record the time, t_1, for 20 oscillations.

(e) Find the period T_1.

(f) Calculate the value of d_2 from the expression;

$$d_2 = \frac{gT_1^2}{4\pi^2} - l.$$

where g is the value obtained in step (p) of method I.

(g) Calculate the value, d, from the centre of the pendulum bob to the point of suspension from;

$$2d = d_1 + d_2.$$

DISMANTLE THE APPARATUS

2. In this experiment, you will determine the focal length f_d of a lens labelled D by two methods. *(40 marks)*

METHOD I

(a) Fix the lens labelled P in a lens holder.

(b) Focus a distant object onto a screen using the lens.

(c) Measure and record the distance, f, between the lens and the screen.

(d) Fix lens P and lens D together using small pieces of clear sellotape at the edges to form a composite lens.

(e) Fix the composite lens into a holder.

(f) Focus a distant object with the side of lens P facing the distant object.

Scanned with CamScanner

(g) Measure and record the distance, F_1, between the composite lens and the screen.

(h) Arrange the object, screen with the wire gauze, torch bulb, composite lens and the plane mirror as shown in figure 3.

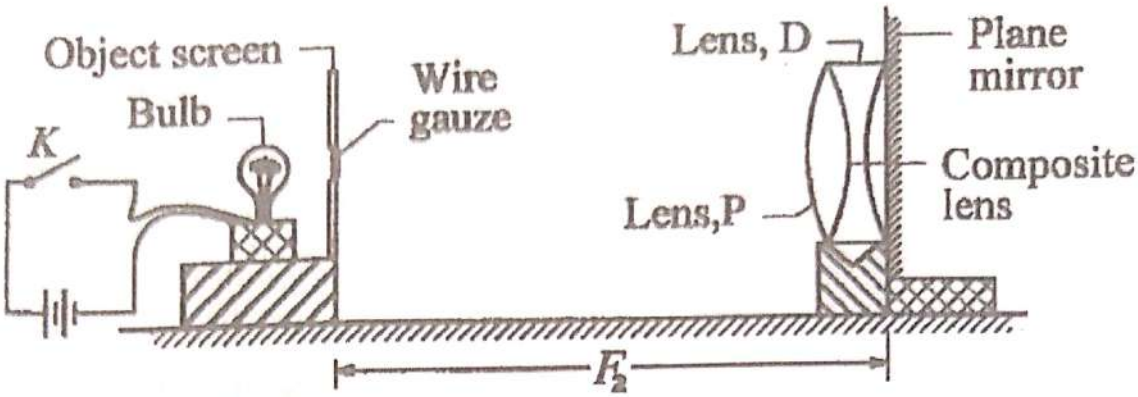

Fig. 3

(i) Close switch K.

(j) Adjust the position of the composite lens until a clear sharp image is formed on the screen.

(k) Measure and record the distance, F_2, between the object screen and the plane mirror.

(l) Open switch K.

(m) Find the value of $F = \frac{F_1 + F_2}{2}$.

(n) Calculate the value of f_1 from the expression;

$$f_1 = \frac{Ff}{f - F}.$$

METHOD II

(a) Arrange the composite lens between the screen and wire gauze and connect the circuit shown in figure 4.

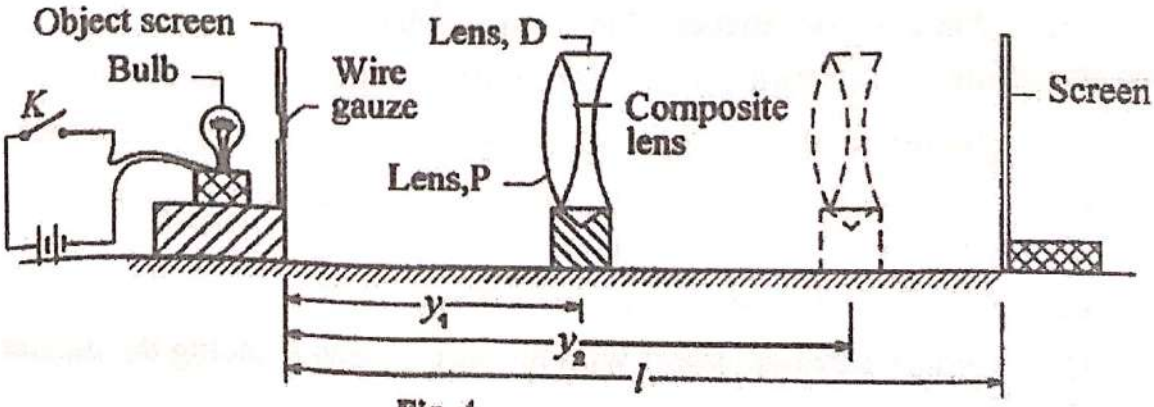

Fig. 4

Scanned with CamScanner

(b) Adjust the position of the screen such that it is at a distance of $l = 105.0$ cm from the object screen.

(c) Close switch K.

(d) Starting with the composite lens close to the wire gauze, move the lens towards the screen to obtain a clear image on the screen.

(e) Measure and record distance, y_1.

(f) Move the lens closer to the screen until a clear sharp diminished image is formed on the screen.

(g) Measure and record the distance, y_2.

(h) Calculate the value of $d = y_2 - y_1$.

(i) Open switch K.

(j) Repeat procedure (b) to (h) for values of $l = 110.0$, 115.0, 120.0, 125.0 and 130.0 cm.

(k) Record your results in a suitable table including values of $\frac{d^2}{l}$.

(l) Plot a graph of l against $\frac{d^2}{l}$.

(m) Read and record the intercept, C, on the l - axis.

(n) Calculate the value of f_2 from the expression;

$$f_2 = \frac{fC}{4f - C}.$$

(o) Find the value of the focal length of lens D, from the expression;

$$f_d = \frac{f_1 + f_2}{2}.$$

DISMANTLE THE SET-UP

Scanned with CamScanner

3. In this experiment, you will determine the ratio β of the resistivities of the two wires P and Q respectively. *(40 marks)*

METHOD I

(a) Measure and record the diameters, D_P and D_q of the wire P and Q respectively.

(b) Fix the two wires on the table using sellotape.

(c) Connect the circuit shown in figure 5 with $x = 0.200$ m for each wire.

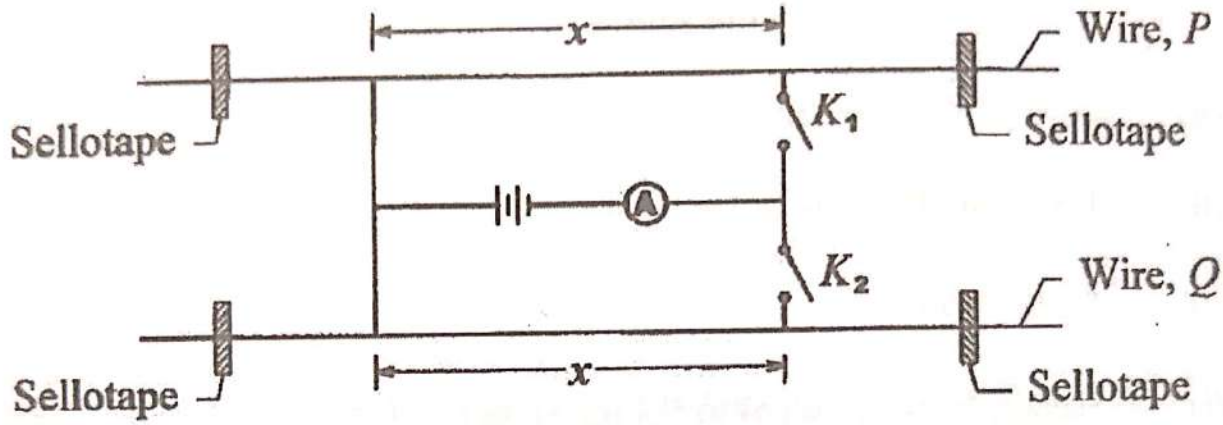

Fig. 5

(d) Close switch K_1 .

(e) Read and record the ammeter reading I_1.

(f) Open switch K_1.

(g) Close switch K_2 .

(h) Read and record the ammeter reading I_2.

(i) Open switch K_2.

(j) Repeat procedures (c) to (i) for values of $x = 0.300,\ 0.400,\ 0.500,\ 0.600,\ 0.700$ and 0.800 m.

(k) Tabulate your results including values of $\frac{1}{I_1}$ and $\frac{1}{I_2}$.

(l) On the same axes, plot a graph of ;

(i) $\frac{1}{I_1}$ against x,

(ii) $\frac{1}{I_2}$ against x.

Scanned with CamScanner

(m) Obtain the slopes, S_P and S_q of the graphs in (l) (i)and (l) (ii) respectively.

(n) Calculate the value of α from the expression $\sqrt{\alpha} = \frac{D_P}{D_q}$.

(o) Calculate the ratio of the resistivities, β of the two wires from the expression $\beta = \frac{S_P}{S_q}\alpha$.

METHOD II

(a) Connect the circuit shown in figure 6 with the same lengths of the wires P and Q of $x = 0.200$ m

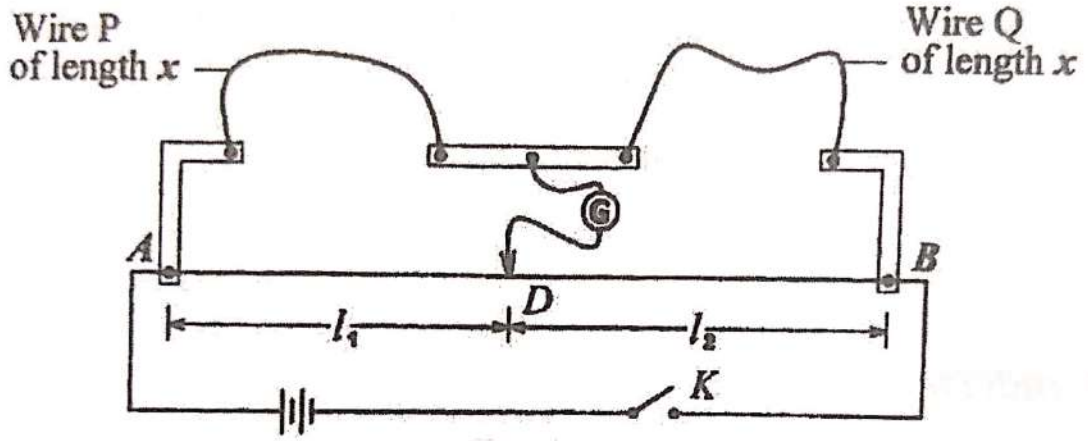

Fig. 6

(b) Close switch K and locate the balance point D.

(c) Measure and record the balance lengths l_1 and l_2.

(d) Open switch K.

(e) Repeat procedure (a) and (b) with the lengths of the wires P and Q, $x = 0.300$ m.

(f) Measure and record the new length as l_3 and l_4 respectively.

(g) Calculate the values of β_1 and β_2 from the expression;

$$\beta_1 = \frac{l_1}{l_2}\alpha,$$

$$\beta_2 = \frac{l_3}{l_4}\alpha.$$

where α is the value obtained in step (n) of method I.

(h) Calculate the ratio of the resistivity of β of the two wires from the expression;

$$\beta = 0.5(\beta_1 + \beta_2).$$

Scanned with CamScanner