No.	Solution	Marks	Comments
Q11.	$\frac{1}{5.52}(8.31^2 - 2.79^2)$		
	$\frac{1}{5.52}(8.31+2.79)(8.31-2.79)$	M1 M1	
	$\frac{1}{5.52}(11.1)(5.52)$	M1	M1 for simplifying
	$= 11.1$	A1	
		04	
Q12	$n(G) = 9,\ n(H) = 20,$		
	$n(G \cup H) = 24$		Reject use of Venn diagram.
	$n(G \cup H) = n(G) + n(H) - n(G \cap H)$		
	$24 = 9 + 20 - n(G \cap H)$	M1	
	$24 = 29 - n(G \cap H)$	M1	
	$n(G \cap H) = 29 - 24$	M1	
	$n(G \cap H) = 5$	A1	
		04	

M-G UTEC 2022 456/2

NO	Solution	Marks	Comments.
Q.3	$f(x) = \frac{x+1}{2}$, $g(x) = 2x+1$		
	$gf(x) = 2\left(\frac{x+1}{2}\right) + 1$		
	$gf(x) = x+2$	B2	B2 for $gf(x) = x+2$
	$gf(9) = 9+2$	M1	$f(9) = \frac{9+1}{2}$ M1 $= 5$ A1
	$gf(9) = 11$	A1	$g(5) = 2\times5+1$ M1 $g(5) = 11$ A1
		04	
Q.4	$A(5,1)$ and $B(2,5)$		
	(a) $\underset{\sim}{AB} = \underset{\sim}{OB} - \underset{\sim}{OA}$		
	$\underset{\sim}{AB} = \begin{pmatrix}2\\5\end{pmatrix} - \begin{pmatrix}5\\1\end{pmatrix}$	M1	
	$\underset{\sim}{AB} = \begin{pmatrix}-3\\4\end{pmatrix}$	A1	
	(b) $\lvert AB\rvert = \sqrt{x^2+y^2}$		
	$\lvert AB\rvert = \sqrt{(-3)^2+4^2}$	M1 ✓	M1 ✓ for his $\begin{pmatrix}-3\\4\end{pmatrix}$. or $\overrightarrow{AB}$
	$\lvert AB\rvert = \sqrt{9+16}$		
	$\lvert AB\rvert = \sqrt{25}$		
	$\lvert AB\rvert = 5$ units	A1	
		04	

NO	Solution	MARKS	COMMENTS
Q.5	$2x+7y=18$ $y=\frac{-2}{7}x+9$		
	Gradient of $(-2,3)$ is $-\frac{2}{7}$	M1	
	From $y=mx+c$ $3=\frac{-2}{7}x-2+c$	M1	M1 for $\frac{-2}{7}$
	$3-\frac{4}{7}=c$		
	$\frac{21-4}{7}=c$	M1	
	$c=\frac{17}{7}$		Accept $7y=-2x+17$ or $7y+2x-17=0$
	$\therefore y=\frac{-2}{7}x+\frac{17}{7}$	A1	
		04	
Q.6	Amount increased $=16\frac{1}{2}\times 50000$		
	$=\frac{33}{2}\times\frac{1}{100}\times 50000$	M1	$\frac{116.5}{100}\times 50000$ $=$ shs 58,250.
	$=$ shs 8,250	A1	
	New bus fare is shs 50000 + shs 8250 shs 58,250.	M1	M1 for 8,250
		A1	
		04	

No	Solution	Marks	Comments
Q.7	$VSF = (LSF)^3$	OR	$EF = 2$
	$\frac{V}{220} = \left(\frac{16}{8}\right)^3$	M1	$VEF = 2^3 = 8$
	$V = 220 \times \frac{2^3}{1}$	M1	$V = 220 \times 8$
	$V = 220 \times 8$	M1	$V = 1760\ cm^3$
	$V = 1760\ cm^3$	A1	
		04	
Q.8	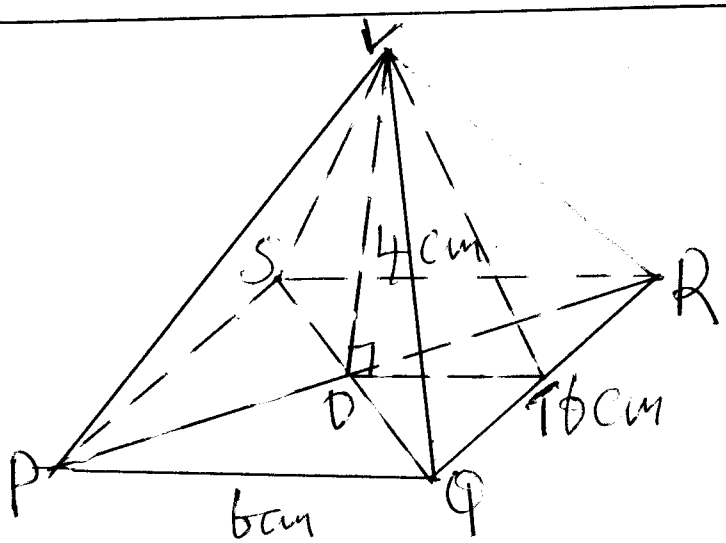		
	$VT^2 = 4^3 + 3^2$	M1	Accept other methods of the Candidates
	$VT^2 = 16 + 9$		
	$VT^2 = 25$		
	$VT = \pm\sqrt{25}$		
	$VT = 5cm$	A1	
	$S.A = 2bs + b^2$	M1✓	M1✓ for Tri (5)
	$S.A = 2 \times 6 \times 5 + 6 \times 6$		
	$SA = 60 + 36$	A1	
	$S.A = 96cm^2$		
		04	

M·G UTC 2022 456/2

Qn. 10

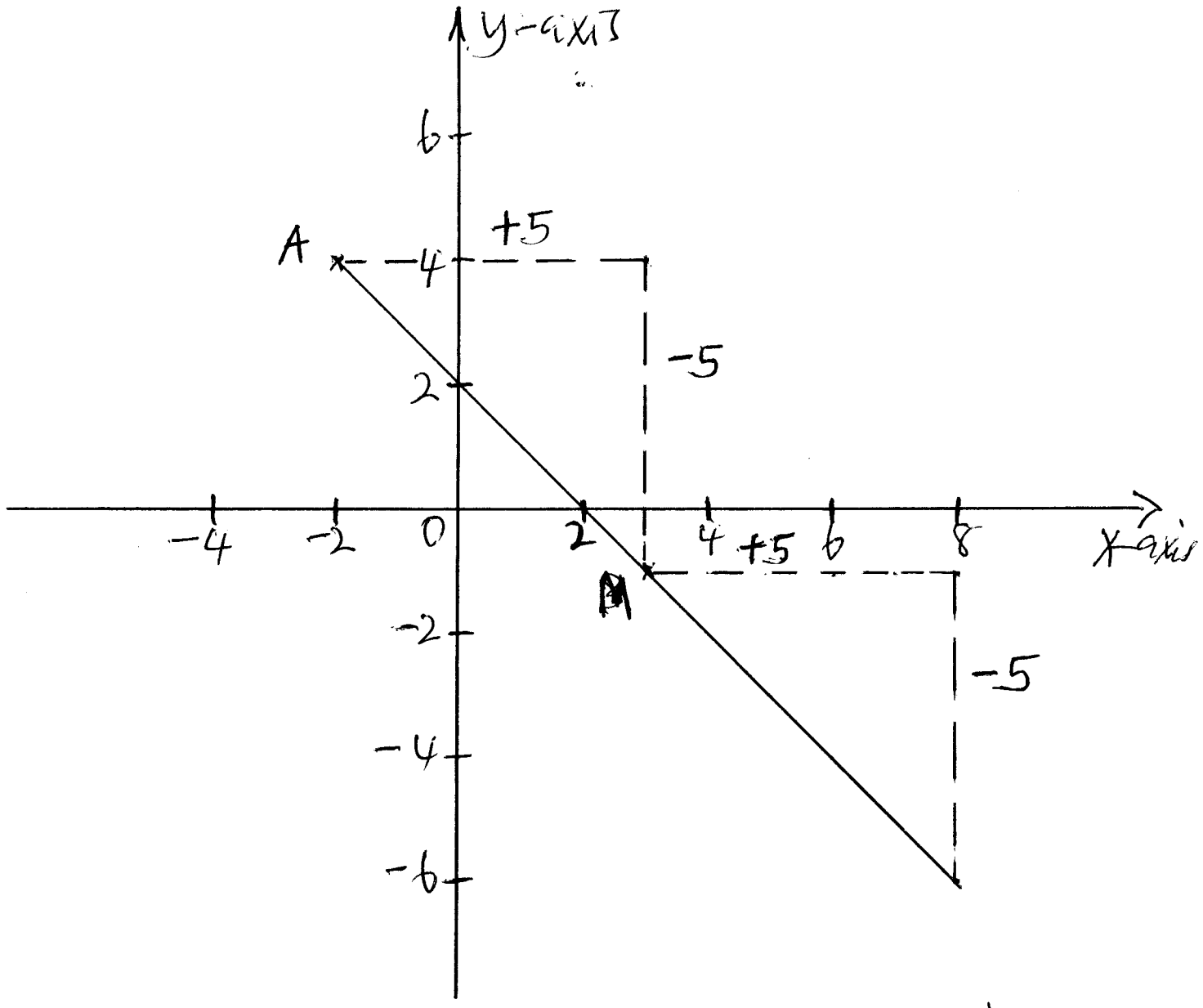

X-Step; $-2 \xrightarrow{+5} 3 \xrightarrow{+5} 8$ ∴ B is $(8, -6)$

y-Step; $4 \xrightarrow{-5} -1 \xrightarrow{-5} -6$

No	Solution	Marks	Comments
Q9	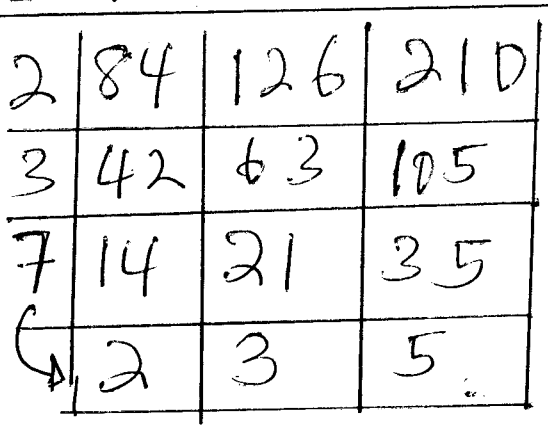	M1 M1	M1 M1 for all three columns correct. M1 for any two columns correct
	LCM = 2X3X7X2X3X5		
	LCM = 1260	A1	
	HCF = 2X3X7		
	HCF = 42	A1	
		04	
Q10	X-Step; $-2 \xrightarrow{+5} 3 \xrightarrow{+5} 8$	M1	~~A for~~ SEE the working on the squared paper.
	Y-Step; $4 \xrightarrow{-5} -1 \xrightarrow{-5} -6$	M1	
	$\therefore$ B is $(8, -6)$	A1 A1	
		04	

NO	Solution	Marks	COMMENTS
Q11. (a)	$ASF = (LSF)^2$		
	$\frac{1728\sqrt{265}}{27\sqrt{265}} = (LSF)^2$	M1	
	$64 = (LSF)^2$	M1	
	$8 = LSF$	A1	
	$VSF = (LSF)^3$	M1	M1 for his (8)
	$\frac{V_B}{24} = (8/1)^3$	M1	
	$V_B = \frac{24 \times 512}{1}$	A1	
	$V_B = 12288\ cm^3$		
(b)	$t \propto d^2$	B1	
	$t = kd^2$	M1	
	$105 = 30^2 \times k$	A1	$k = \frac{105}{900} = 0.1167$
	$\frac{105}{900} = k$		
	So, $t = \frac{105}{900} d^2$		
	When $d = 60$	M1	M1
	$t = \frac{105}{900} \times 60 \times 60$	A1	Accept 420.12
	$t = 420$ hours		
		12	

Question	Solution	Marks	Comments
Qn.12 (a)	$n(\varepsilon) = 55$ 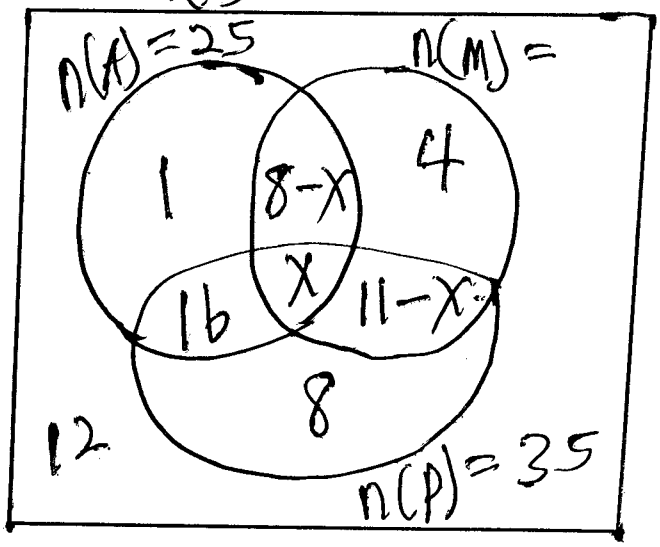	B8	B1 for each correct entry in a venn diagram
(b)	$12+35+1+4+8-x=55$	M1	
	$60-x=55$		
	$x=60-55$		
	$x=5$	A1	
(c)	$P(\text{only two crops}) = \frac{16+3+6}{55}$	M1	
	$= \frac{25}{55}$ or $\frac{5}{11}$	A1	
		12	

Question	Solution	Marks	Comments
Q.13	(a) $h(x) = ax^2 - b$,		
	$h(2) = a(2)^2 - b = 12$		
	$4a - b = 12$ ---- (i)	M1	M1 for eqn.
	$h(3) = 9a - b = 32$	M1	M1 for eqn.
	$9a - b = 32$ ---- (ii)		
	Equation (ii) − Equation (i)		
	$9a - b = 32$		M1 for the method.
	$-\ 4a - b = 12$	M1	
	$5a = 20$		
	$a = 4$	A1	$a = b = 4$
	$b = 4$	A1	
	(b) $h(x) = 4x^2 - 4$		
	$h(6) = 4(6)^2 - 4$	M1	
	$h(6) = 144 - 4$		
	$h(6) = 140$	A1	
	(c) let $y = h(x)$		
	$y = 4x^2 - 4$		
	$\frac{y+4}{4} = x^2$		
	$x = \pm\sqrt{\frac{y+4}{4}}$		
	$\therefore h^{-1}(x) = \pm\sqrt{\frac{x+4}{4}}$	B2	
	(d) $h^{-1}(60) = \pm\sqrt{\frac{60+4}{4}}$	M1	
	$h^{-1}(60) = \pm\sqrt{\frac{64}{4}} = \pm\sqrt{16}$	M1	Reject $h^{-1}(60) = -4$
	$h^{-1}(60) = \pm 4$	A1	
		12	

NO	Solution	Mark	Comments
4.14	(a) $V = \pi r^2 h$		
	$V = \frac{22}{7} \times \left(\frac{12}{2}\right)^2 \times 11$	M1	
	$V = \frac{22}{7} \times 36 \times 11$	M1	
	$V = 1244.5714\ cm^3$	A1	Accept $V = 1244.57\ cm$
	Volume of the card tube		
	$= \pi r^2 h$		
	$= \frac{22}{7} \times \left(\frac{5}{2}\right)^2 \times 11$	M1	
	$= \frac{22}{7} \times \frac{25}{4} \times 11$	M1	
	$= 216.0714\ cm^3$	A1	Accept $V = 216.07\ cm$
	Volume of the paper is		
	$= 1244.5714 - 216.0714$		
	$= 1028.5\ cm^3$	A1	
	(b) Volume of one sheet of paper		
	$= 11 \times 13 \times 0.003$	M1	
	$= \cancel{4.29\ cm^3}\ 0.429\ cm^3$	A1	
	Number of sheets of paper in one roll $= \frac{1028.5}{0.429}$	M1	
	$= 2397.4390$	M1	
	$\simeq$ ~~240 sheets~~	A1	
	$\simeq 2,397$ sheets	12	

No	Solution	A:JAD Marks	Comments
Q.15	(a) $A = P\left(1+\frac{r}{100}\right)^n$		
	$A = 60000000\left(1+\frac{15}{100}\right)^2$	M1	
	$A = 60\,000\,000\,(1.15)^2$	M1	
	$A = 79,350,000/=$	A1	
	(i) Interest = 79,350,000 − 60,000,000	M1	
	= shs 19,350,000	A1	
	(ii) Interest per installment		
	$= \frac{79,350,000}{8}$	M1	
	= shs 9,918,750.	A1	
	(b) Import tax per Car.		Accept
	$= \frac{110}{100} \times 20\,000\,000$	M1	$\frac{110}{100} \times 20$ million
	= shs 22,000,000.	A1	22 millions
	9 Cars = 9 × 22,000,000.		9 × 22 = 198 millio
	= shs 198,000,000.	A1	
	Tax in dollars		$\frac{198}{3600}$ = 0.055 million dollars
	$= \frac{198,000,000}{3600}$	M1	
	= $ 55,000.	A1	
		12	

NO	Solution	Marks	Comments
Q.16	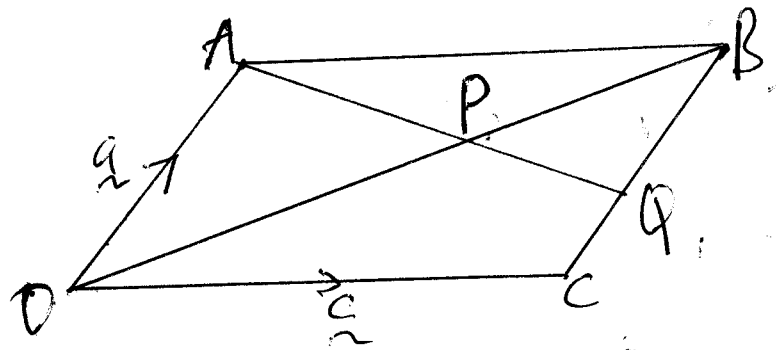		
	(a) (i) $\vec{OB} = \underset{\sim}{a} + \underset{\sim}{c}$.	B1	
	(ii) $\vec{OP} = \frac{3}{4}\vec{OB} = \frac{3}{4}(\underset{\sim}{a}+\underset{\sim}{c})$	B1	
	(iii) $\vec{AP} = \vec{AC} + \vec{OP}$		
	$\vec{AP} = -\underset{\sim}{a} + \frac{3}{4}(\underset{\sim}{a}+\underset{\sim}{c})$	M1	
	$\vec{AP} = \frac{3}{4}\underset{\sim}{c} - \frac{1}{4}\underset{\sim}{a}$		
	$\vec{AP} = \frac{1}{4}(3\underset{\sim}{c} - \underset{\sim}{a})$	A1	
	(b) (i) $\vec{AQ} = K\vec{AP}$		
	$\vec{CQ} - \vec{CA} = \frac{K}{4}(3\underset{\sim}{c} - \underset{\sim}{a})$		
	$\vec{CQ} = \underset{\sim}{a} + \frac{3K}{4}\underset{\sim}{c} - \frac{K}{4}\underset{\sim}{a}$.	M1	
	$\vec{CQ} = \left(1 - \frac{K}{4}\right)\underset{\sim}{a} + \frac{3}{4}K\underset{\sim}{c}$ —(1)	A1	
	(ii) $\vec{CQ} = m\vec{CB}$.		
	$\vec{OQ} = \underset{\sim}{c} + m(\underset{\sim}{a})$	M1	
	$\vec{OQ} = \underset{\sim}{c} + M\underset{\sim}{a}$ —— (2)	A1	

NO	Solution	Mark	Comments.
	Equating the Coefficient of the corresponding vectors		
	$(1-\frac{K}{4})q + \frac{3}{4}Kc = Mq + c$.		
	Since q and c are Neither parallel nor Zero, comparing the Coefficient of q and c we get		
	$1-\frac{K}{4} = M$ and $\frac{3}{4}K = 1$	M1	
	$\Rightarrow K = \frac{4}{3}$ and $M = 1 - \frac{1}{4} \times \frac{4}{3}$	M1	M1 for Correct Substitution of K.
	$M = 1 - 1/3$		
	$M = 2/3$		
	$\therefore K = \frac{4}{3}$, $M = 2/3$	A1 A1	
		12	

No	Solution	Marks	Comments
Q.17	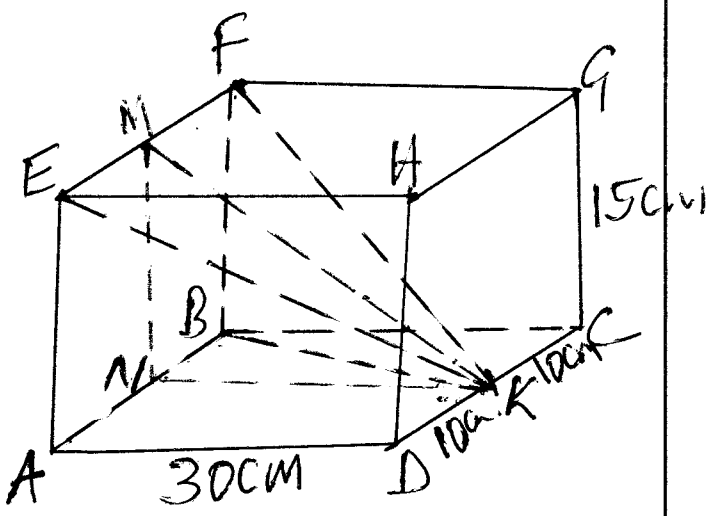		
(a)	$BK^2 = 30^2 + 10^2$	M1	M1 for Correct use of pythagoras theorem.
	$BK^2 = 900 + 100$		
	$BK^2 = 1000$		
	$BK = \pm\sqrt{1000}$		
	$BK = 31.6228$		
	$BK = 31.62\text{ cm}$	A1	
	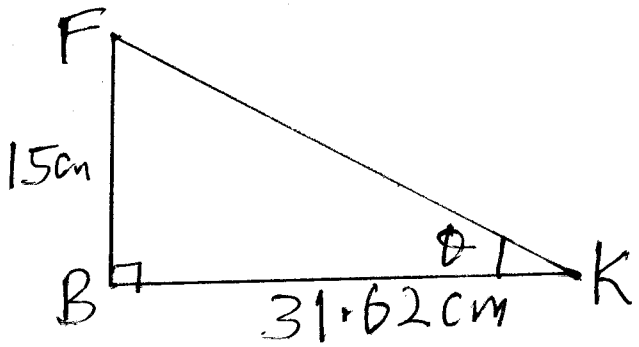		
	$\tan\theta = \frac{15}{31.62}$	M1A1	M1A1 for his (31.62°)
	$\theta = \tan^{-1}\left(\frac{15}{31.62}\right)$		
	$\theta = 25.3789$		
	$\theta \simeq 25.38°$	A1	

No	Solution	Marks	Comments
	(b) Required angle $= \angle ADE = \alpha$ or $\angle FCB = \alpha$ or $\angle NKM = \alpha$.		
	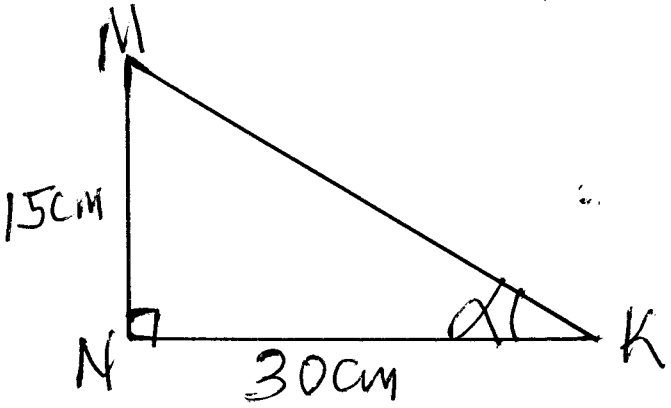	B1	
	$\tan\alpha = \frac{15}{30}$	M1	
	$\alpha = \tan^{-1}\left(\frac{15}{30}\right)$		
	$\alpha = 26.5651$		
	$\alpha \simeq 26.57°$	A1	
	(c) 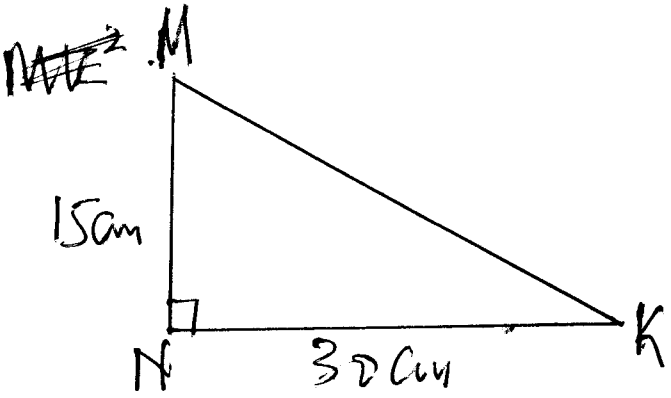		
	$MK = \sqrt{30^2 + 15^2}$		
	$MK = \sqrt{1125}$		
	$MK = 33.5410$		
	$MK = 33.54$ cm.	M1	

NO	Solution	Marks	Comments
	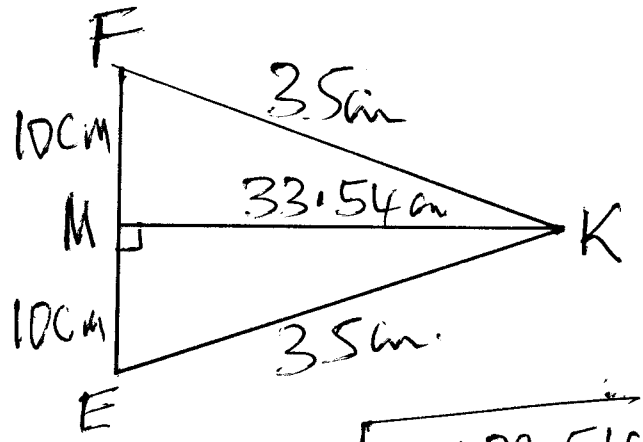		
	$FK = EK = \sqrt{10^2 + 33.54^2}$ $= \sqrt{100 + 1124.93}$ $= \sqrt{1224.93}$ $= 34.9990$ $\simeq 35cm$	M1	
	$MK = FK \times \cos\left(\frac{FKE}{2}\right)$ $33.54 = 35\cos\left(\frac{EKF}{2}\right)$ $\frac{33.5}{35} = \cos\left(\frac{EKF}{2}\right)$ $0.9583 = \cos\left(\frac{EKF}{2}\right)$ $\cos^{-1}(0.9583) = \frac{EKF}{2}$ $2 \times 16.6045 = EKF$ $33.2091 = EKF$ $EKF \simeq 33.21°$	M1 M1 A1	Accept other Alternatives OR $\tan\angle MKF = \frac{10}{33.54}$ $\angle MKF = \tan^{-1}\left(\frac{10}{33.54}\right)$ $\angle MKF = \tan^{-1}(0.2982)$ $\angle MKF = 16.6046$ $\therefore \angle EKF = 2 \times 16.6046$ $= 33.2096$ $\angle EKF \simeq 33.21°$
		12	