P250/1
Physical Geography
Paper I
July - August, 2024
3 hours

UGANDA MUSLIM TEACHERS' ASSOCIATION

UMTA JOINT MOCK EXAMINATIONS 2024

UGANDA ADVANCED CERTIFICATE OF EDUCATION

Geography

(Physical Geography)

Paper I

3 Hours

INSTRUCTIONS TO CANDIDATES:

- *Answer **four** questions in all.*
- *Section **A** is compulsory.*
- *Answer **one** question from Section **B** and **one** question from Section **C**.*
- *Credit will be given for the use of relevant sketch maps, diagrams and specific examples studied in the field.*
- *Any additional question(s) attempted will **not** be marked.*

Scanned with OKEN Scanner

SECTION A

Questions 1 and 2 are compulsory

1. COMPULSORY MAP WORK QUESTION

Study the **1:50,000 EAST AFRICA (UGANDA) KAMPALA** map extract, part of sheet 71/1, series Y732, edition 3- USD and answer the questions that follow

(a) State the;

(i) Grid reference of the secondary trigonometrical station at Buziga (01 mark)

(ii) Man – made feature at grid reference **525439.** (01 mark)

(b) Calculate the area covered by Lake Victoria on the map extract excluding swamps. (02 marks)

(c) Reducing by **2½** times, draw a sketch map of the area shown on the map extract and on it mark and name the following;

(i) Hills: Naguru and Kireka,

(ii) Lake Victoria and Nakivubo swamps,

(iii) any **one** planted forest,

(iv) Kampala city centre,

(v) railway line. (11 marks)

(d) Describe the;

(i) relief, (04 marks)

(ii) relationship between relief and drainage, in the area shown on the map extract. (06 marks)

Scanned with OKEN Scanner

2. COMPULSORY PHOTOGRAPH INTERPRETATIONS QUESTION

Study the photograph provided below and answer the questions that follow

(a) Draw a landscape sketch and on it mark and label any;

(i) **two** physiographic regions

(ii) **three** land use types (08 marks)

(b) (i) Identify the weather condition shown in the middle ground of the photograph. (01 mark)

(ii) Describe the process(es) leading to the occurrence of the weather condition identified in **(b) (i)** above. (06 marks)

(c) Explain the problems faced by people living in the area shown in the photograph (08 marks)

(d) Giving reasons for your answer suggest an area in East Africa where this photograph could have been taken (02 marks)

Scanned with OKEN Scanner

SECTION B

*Answer **one** question from this section*

3. (a) Distinguish between divergent and convergent plate movements. (06 marks)

   (b) Explain the relevance of plate tectonics in the understanding of the distribution of continents (19 marks)

4. Examine the influence of igneous rocks on the formation of extrusive volcanic landforms in East Africa (25 marks)

5. Account for the formation of wave erosion landforms in East Africa. (25 marks)

SECTION C

*Answer **one** question from this section*

6. Account for the increasing semi-arid climatic conditions in East Africa. (25 marks)

7. (a) Account for the destruction of natural forest vegetation in East Africa. (15 marks)

   (b) Explain the measures being taken to ensure sustainable use of natural forest vegetation in East Africa. (10 marks)

8. To what extent have human activities been responsible for the occurrence of soil erosion in East Africa? (25 marks)

END

Scanned with OKEN Scanner

P510/1
Physics
Paper 1
July - August
2024
2 ½ Hours

UGANDA MUSLIM TEACHERS' ASSOCIATION

UMTA JOINT MOCK EXAMINATIONS - 2024

UGANDA ADVANCED CERTIFICATE OF EDUCATION

Physics

Paper 1

2 Hours 30 Minutes

INSTRUCTIONS TO CANDIDATES

- *Answer **five** questions including at least **one**, but not more than **two** from each of the Sections **A**, **B** and **C**.*
- *Any additional question(s) answered will not be marked.*

Assume where necessary:

Acceleration due to gravity, g	$= 9.81ms^{-2}$
Electron charge, ℓ	$= 1.6x10^{-19}c.$
Electron mass	$= 9.11x10^{31}kg.$
Mass of earth	$= 5.97x10^{24}kg.$
Plank's constant h	$= 6.6x10^{-34}Js$
Stefan's – Boltzmann's constant σ	$= 5.67x10^{-8}Wm^{-2}K^{-4}$
Radius of earth	$= 6.4x10^{6}m.$
*Speed of light in vacuum, **C***	$= 3.0x10^{8}m.$
*Universal gravitational constant **G***	$= 6.67x10^{-11}Nm^{2}kg^{-2}$
Specific heat capacity of water	$= 4200Jkg^{-1}K^{-1}$
Density of water	$= 1000kgm^{-3}$
*Gas constant, **R***	$= 8.31Jmol^{-1}k^{-1}$
Avogadro's number N_A	$= 6.02x10^{23}mol^{-1}$
Specific latent heat of vaporization of water	$= 2.26x10^{6}Jkg^{-1}$
Radius of earth's orbit about the sun	$= 1.5x10^{11}m.$

Scanned with OKEN Scanner

1. a) (i) What is meant by relative velocity? (01 mark)

(ii) A passenger on a train which is travelling due east at $100kmh^{-1}$ observes a car which is travelling North-East at $60kmh^{-1}$. Calculate the velocity of the car relative to the observer on the train. (04 marks)

b) (i) State the conditions for a force to be conservative. (02 marks)

(ii) Explain why centripetal force does no work. (02 marks)

c) A bullet of mass 10g and travelling at a speed of $500ms^{-1}$ strikes a block of mass 2kg which is suspended by a string of length 5.0m. The centre of gravity of the block is found to rise a vertical distance of 10.0cm.

(i) What is the speed of bullet after it emerges from the block? (04 marks)

(ii) Calculate the maximum inclination of the string to the vertical. (02 marks)

d) (i) State the principle of conservation of mechanical energy. (01 mark)

(ii) Prove the principle in **(i)** above for a body projected from a point vertically upwards. (04 marks)

2. a) Define the following.

(i) Simple harmonic motion. (01mark)

(ii) Relative density. (01 mark)

b) Describe an experiment to determine relative density of an irregular solid which floats in water. (04 marks)

c). A rectangular block of wood of volume $4.5x10^{-4}m^3$ floats in a liquid of density $8.2x10^3km^{-3}$ with only 60% of its volume immersed. The area of cross-section of the block is $6.0x10^{-3}m^2$.

(i) The block is given a small vertical displacement and then released. Show that it executes simple harmonic motion and find its frequency. (07 marks)

Scanned with OKEN Scanner

(ii) The block is now placed in another liquid of density $1200kgm^{-3}$, find the volume of metal of density $7.2 \times 10^3 kgm^{-3}$, that should be added to the block in order for the block to just float totally immersed in this liquid. (04 marks)

3. a) Distinguish between Viscosity and Fluidity. (02 marks)

b) (i) Explain the effect of increasing pressure on the Viscosity of a liquid. (02 marks)

(ii) A square plate of side 0.1m moves in water parallel to another similar plate at $0.1ms^{-1}$. If the viscous force is 0.002 N and coefficient of viscosity of water is $\mathbf{1.002 \times 10^{-3} Nsm^{-2}}$, find the distance between the plates at constant temperature. (04 marks)

c) (i) Describe the experiment to compare the viscosity of a less viscous liquid at **two** different temperatures. (05 marks)

(ii). State one precaution that must be taken in the above experiment to ensure accurate results. (01 mark)

d) (i) Show that surface tension is equal to the work done in increasing the surface area of a liquid by $1m^2$ under isothermal conditions. (03 marks)

(ii) Explain why paints and lubricating oils should have low surface tension. (01 mark)

(iii)

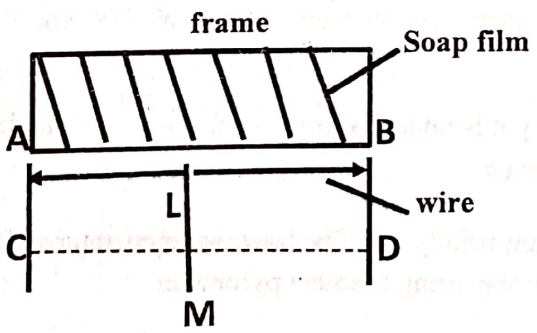

Scanned with OKEN Scanner

A small mass, **M** on a light string is fixed on a thin wire of length, **L** enclosing a soap film. The wire moves from position **AB** to **CD.** The system is in equilibrium when the wire is at **CD.** If γ is the surface tension soap solution and temperature remains constant, show that;

$$M = \frac{4\gamma L}{g}$$

4. a) State Keplers laws of planetory motion. (03 marks)

b) A small artificial earth satellite revolves in an equatorial orbit with a period of 94 minutes. Calculate the;

(i) Height of the satellite above the earth's surface. (04 marks)

(ii) Velocity of the satellite in the orbit (02 marks)

c) An air craft moving in a horizontal plane at a constant speed of $650ms^{-1}$, makes a turn with a radius of 80km at an angle of tilt, θ to the vertical.

(i) Explain why the aircraft has to bank its wings in order to move in a circular path. (02 marks)

(ii) Find the value of θ. (02 marks)

d) Describe the principle of operation of a centrifuge. (04 marks)

SECTION B

5. a) (i) With reference to a thermocouple thermometer, what is meant by neutral temperature? (01 mark)

(ii) Briefly explain why it is undesirable to use a thermocouple for temperatures close to the neutral temperature. (02 marks)

b) (i) With aid of a diagram briefly describe how the temperature of the surface of the sun is measured using a disappearing filament pyrometer. (05 marks)

(ii) State **two** disadvantages of the pyrometer in **(i)** above. (01 mark)

Scanned with OKEN Scanner

c) A calorimeter containing first 40g and then later 100g of water is heated and suspended in the same constant temperature enclosure. It is found that the times taken to cool from 50°C to 40°C in the two cases are 15 minutes and 33 minutes respectively. Calculate the heat capacity of the calorimeter. (03 marks)

d) (i) Define melting point. (01 mark)

(ii) Explain briefly why melting point occurs at a constant temperature. (03 marks)

(iii) A shiny kettle with a 2.0 KW heating element has a heat capacity of $400JK^{-1}$. A 1.00kg of water at 20° C is placed in the kettle. The kettle is then switched on and 0.5kg of water remain after 13 minutes. Calculate the value of the specific latent heat of vaporization of water. (04 marks)

6. a) (i) State Dalton's law of partial pressures. (01 mark)

(ii) Use the kinetic theory expression of pressure of an ideal gas to deduce Dalton's law. (05 marks)

b) Describe an experiment to verify the kinetic theory of matter. (04 marks)

c) Two identical vessels each of capacity 1.0 liter are connected by a tube of negligible volume. Together they contain helium gas at a pressure of 80cmHg and temperature 27°C. If **one** vessel is cooled to O^0 C and the other heated to 100°C, assuming that the heat capacity of each vessel is unchanged. Calculate the;

(i) mass of helium gas in the vessels. (03 marks)

(ii) pressure developed in the apparatus. (03 marks)

(molar mass of helium = $4gmol^{-1}$)

d) (i) What is meant by internal energy of an ideal gas? (01 mark)

(ii) A mass of **1g** of hydrogen at 20°C and $1x10^5$Pa has its volume halved by an adiabatic change. Calculate the change in the internal energy of the gas.

(ratio of the principal specific heats of hydrogen = 1.40)

(molar mass of hydrogen = $2gmol^{-1}$). (03 marks)

Scanned with OKEN Scanner

7. a) Define the following.

(i) Temperature gradient. (01 mark)

(ii) Radiative equilibrium. (01 mark)

b) (i) As a metal is heated it appears to change colour. Describe and account for this effect. (03 marks)

(ii) Explain why its much hotter above the fire than by its sides. (02 marks)

c) (i) Describe with aid of a diagram a method of determining the thermal conductivity of glass. (07 marks)

(ii) State **two** advantages of the method used in **(i)** above. (01 mark)

d) A tungsten filament lamp of effective radiating surface area $0.90cm^2$ radiates as a black body. It has a resistance of 50Ω at 20^0C. At an operating voltage of 240V, the current through the lamp is 0.5A. If the temperature coefficient of resistance is $5.0x10^{-3}K^{-1}$.

(i) Find the temperature at the above operating voltage. (03 marks)

(ii) Calculate the value of Stefan's constant. (02 marks)

SECTION C

8 a) (i) Define specific charge. (01 mark)

(ii) With aid of diagram describe an experiment to determine the specific charge of an electron by J.J Thomson's method. (06 marks)

b) Show that the angle, $\boldsymbol{\theta}$ of deflection of charge **Q** with mass, **m** accelerated by a p.d, **V** in an electric field of field strength, **E** between the plates of length, **d** is given by;

$$\tan \boldsymbol{\theta} = \frac{Ed}{2V}.$$ (04 marks)

c) A uniform magnetic field of flux density **1.2T** is applied to a cloud chamber. Alpha particles emitted from a radioactive source in the chamber describe a circular path of radius 36.0cm. Find the energy in **Mev** with which the alpha particles are emitted. Mass of alpha particles = 4.0026U. (04 marks)

Scanned with OKEN Scanner

d) The energy levels of hydrogen are -13.69ev, -3.39eV, -1.51eV, -0.85eV.

(i) What is likely to happen in an unexcited state when bombarded with an electron energy 12.18ev, 14.0ev. (02 marks)

(ii) Calculate the shortest wave length of the hydrogen spectrum and state the region of the spectrum in which it lies. (03 marks)

9 a) (i) State Bragg's law of X-ray diffraction.

(ii) A beam of X-rays of wavelength, λ is incident on a set of atomic planes of separation, **d.** Show that for diffraction to occur, $n\lambda \leq 2d$, where **n** is the order of diffraction. (04 marks)

b) An X-ray tube operating a100KV and 20m A produces x-rays of shortest wave length. The x-rays are incident on a quartz fibre of atomic spacing 1.5×10^{-10}m. Find the;

(i) number of electrons incident on the target per second. (02 marks)

(ii) maximum possible order with these x-rays. (02 marks)

c) Explain how the increase of filament current leads to increase of intensity of x-ray? (02 marks)

d) (i) What is meant by work function of a metal? (01 mark)

(ii) The surface of a metal of work function 1.9ev used in a photo cell is illuminated by violet light of wave length 4.5×10^{-7}m. Calculate the stopping voltage for the photo cell. (03 marks)

e) Describe an experiment to show that for every metal, there is a particular frequency of the incident radiation below which no emission of electrons occurs irrespective of the intensity of that radiation. (05 marks)

10 a) (i) What is meant by the terms mass defect and radioactive tracer? (02 marks)

(ii) State **one** industrial use of radioactive tracers. (01 mark)

b) Carbon -14, ${}^{14}_{6}C$ decays by emission of beta particles.

(i) Write an equation for the decay. (01 mark)

(ii) Explain how Carbon-14 is used in Carbon dating. (03 marks)

Scanned with OKEN Scanner

c) (i) Describe the structure and action of a diffusion cloud chamber. (06 marks)

(ii) Explain how the cloud chamber observations can be used to ascertain whether the source is an α — particle or β — particle emitter. (03 marks)

d) **A G-M** tube counter is used to measure the age of a piece of wood. A sample containing 1.00g of carbon taken from the wood is placed in the detecting tube and the count rate recorded was 1000 counts per hour. The background count rate at the time was 300 counts per hour. When living material containing 1.00g of Carbon was placed in the tube, the count rate was 1600 counts per hour. If the half-life of Carbon -14 is 5700 years, Calculate the age of the wood. (04 marks)

END

© UMTA Joint Mocks 2024

Scanned with OKEN Scanner