Topic 2

Basic Logic Gates

Electronic Switch – Transistors

- **Transistors are the basis of binary digital circuits**
  - Transistors operate at 2 values

    H / L or

    On / Off or

    1 / 0

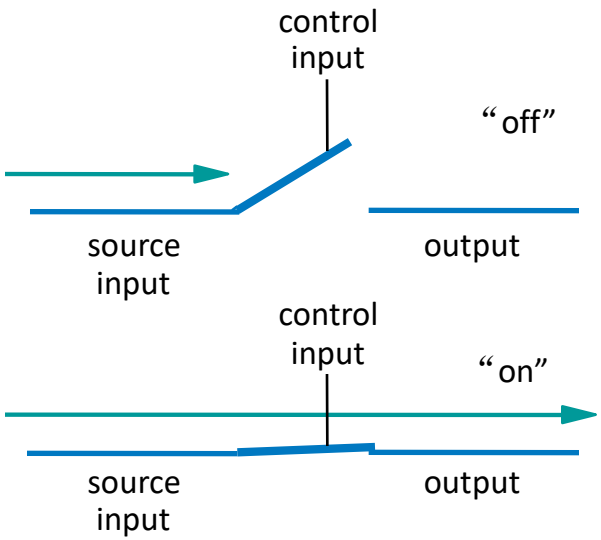

- **Evolution of electronic switches**
  - 1930s: Relays
  - 1940s: Vacuum tubes
  - 1950s: Discrete transistor
  - 1960s: Integrated circuits (ICs)
    - Initially just a few transistors on IC
    - Then tens, thousands, millions...

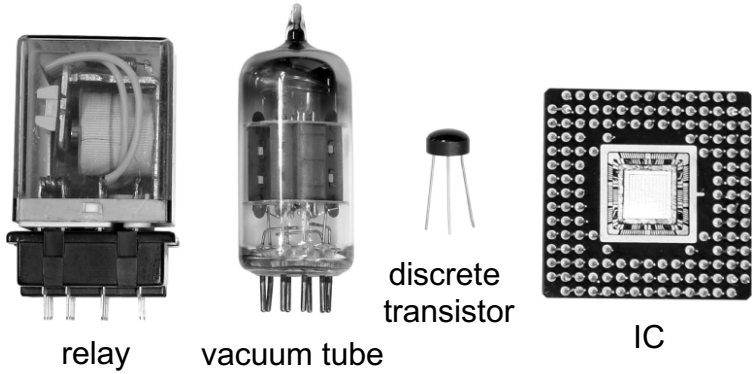

Moore's Law

- **IC capacity doubling about every 18 months for several decades**
  - Known as "Moore's Law" after Gordon Moore, co-founder of Intel
    - Predicted in 1965 predicted that components per IC would double roughly every 18 months or so
  - For a particular number of transistors, the IC shrinks by half every 18 months
    - Enables incredibly powerful computation in incredibly tiny devices
  - Today's ICs hold *billions* of transistors
    - The first Pentium processor (early 1990s) had only 3 million

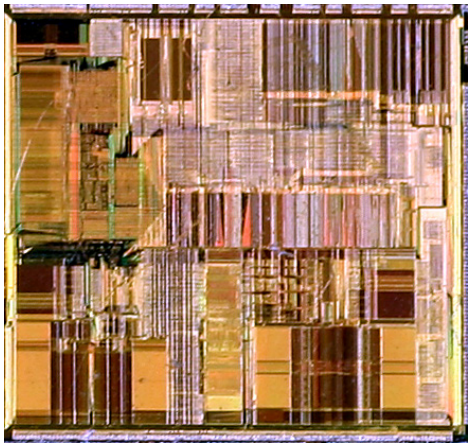

An Intel Pentium processor IC having millions of transistors

CMOS Transistor

- **CMOS – Complementary Metal-Oxide-Semiconductor**
- **Transistors with CMOS technology**

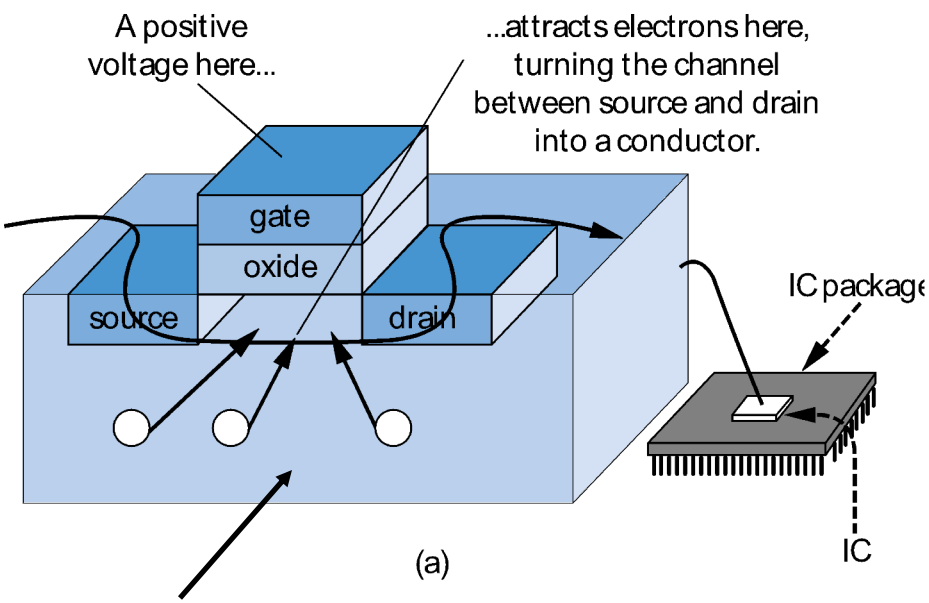

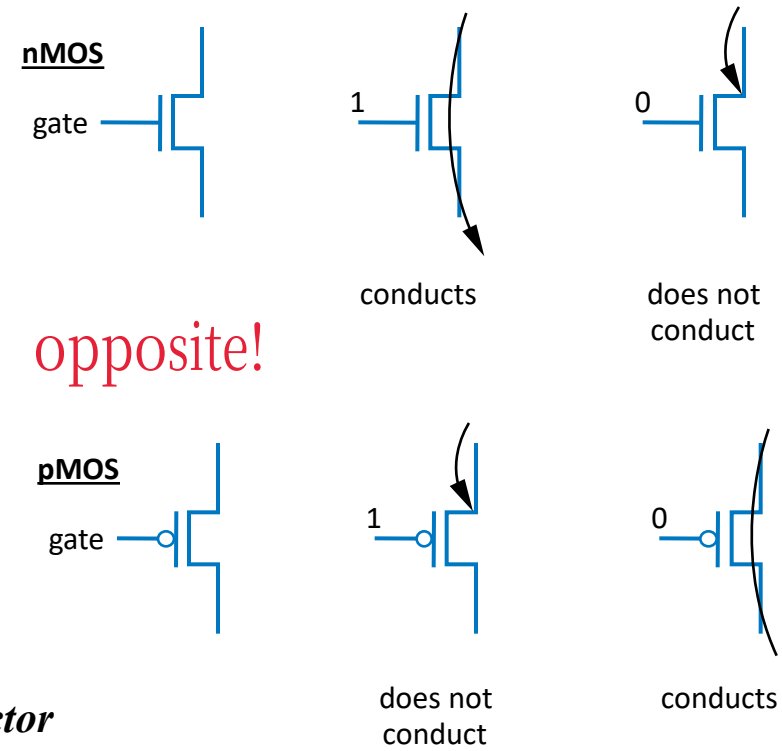

Silicon -- not quite a conductor or insulator: ***Semiconductor***

AND Logic

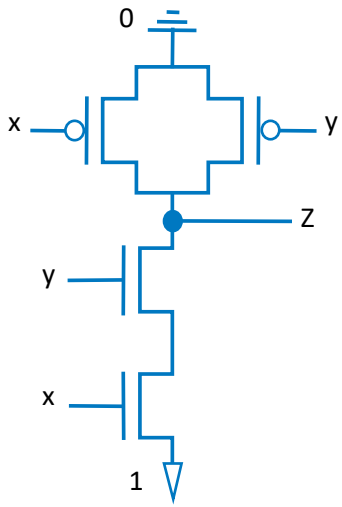

X	Y	Z = XY
0	0	0
0	1	0
1	0	0
1	1	1

Truth Table

- **Definition of AND operation**

$Z = X \bullet Y$ means Z = 1 if and only if both X = 1 and Y = 1;

Variable

AND operator

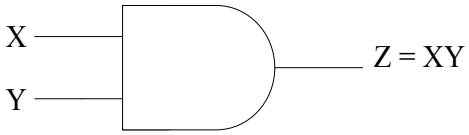

2-input AND gate

Truth Table

- **Truth table creates the relationship between the inputs and outputs**
  - Must include all the inputs to the device in the left columns
  - Must include all the outputs of the device in the right columns
  - The behavior of the circuit is implied by the table

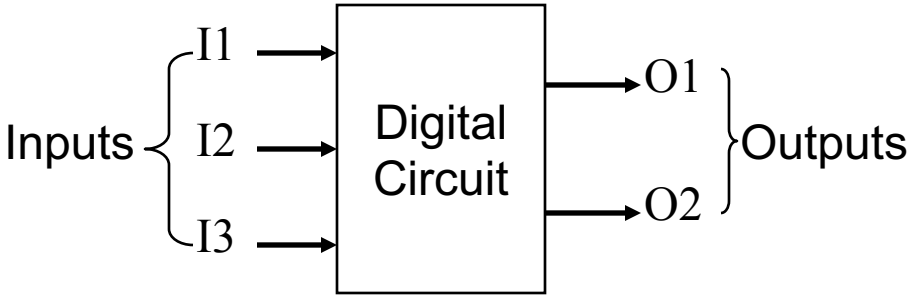

Inputs			Outputs	
I1	I2	I3	O1	O2
0	0	0	?	?
0	0	1	?	?
0	1	0	?	?
0	1	1	?	?
1	0	0	?	?
1	0	1	?	?
1	1	0	?	?
1	1	1	?	?

Number of combinations is 2^N; N is the number of the inputs

Example of Truth Table

a	b	F
0	0	
0	1	
1	0	
1	1	

(a)

a	b	c	F
0	0	0	
0	0	1	
0	1	0	
0	1	1	
1	0	0	
1	0	1	
1	1	0	
1	1	1	

(b)

a	b	c	d	F
0	0	0	0	
0	0	0	1	
0	0	1	0	
0	0	1	1	
0	1	0	0	
0	1	0	1	
0	1	1	0	
0	1	1	1	
1	0	0	0	
1	0	0	1	
1	0	1	0	
1	0	1	1	
1	1	0	0	
1	1	0	1	
1	1	1	0	
1	1	1	1	

(c)

OR Logic

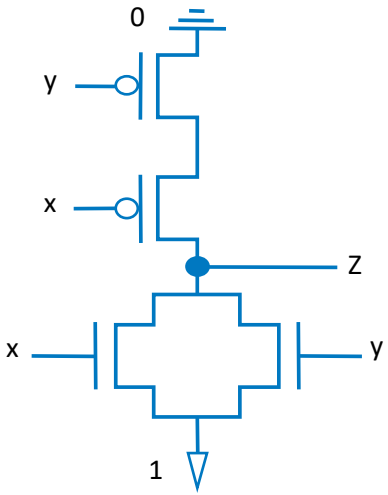

X	Y	Z = X + Y
0	0	0
0	1	1
1	0	1
1	1	1

Truth Table

- **Definition of OR operation**

  Z = X + Y means Z = 1 if either X=1 or Y=1, or both;

OR operator

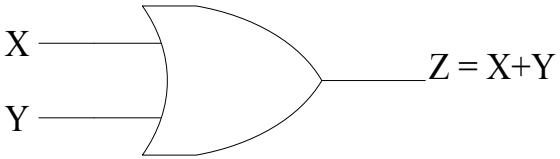

2-input OR gate

NOT Logic

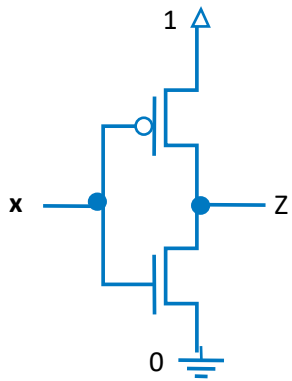

X	Z = X’
0	1
1	0

Truth Table

- **Definition of NOT operation**

  Z = X’ or Z = $\overline{X}$ means Z = 0 if X = 1; Z = 1 if X = 0; Z is the complement of X

NOT operator

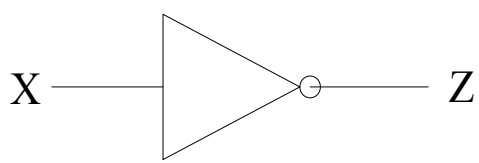

NOT gate/Inverter

Logic Gates

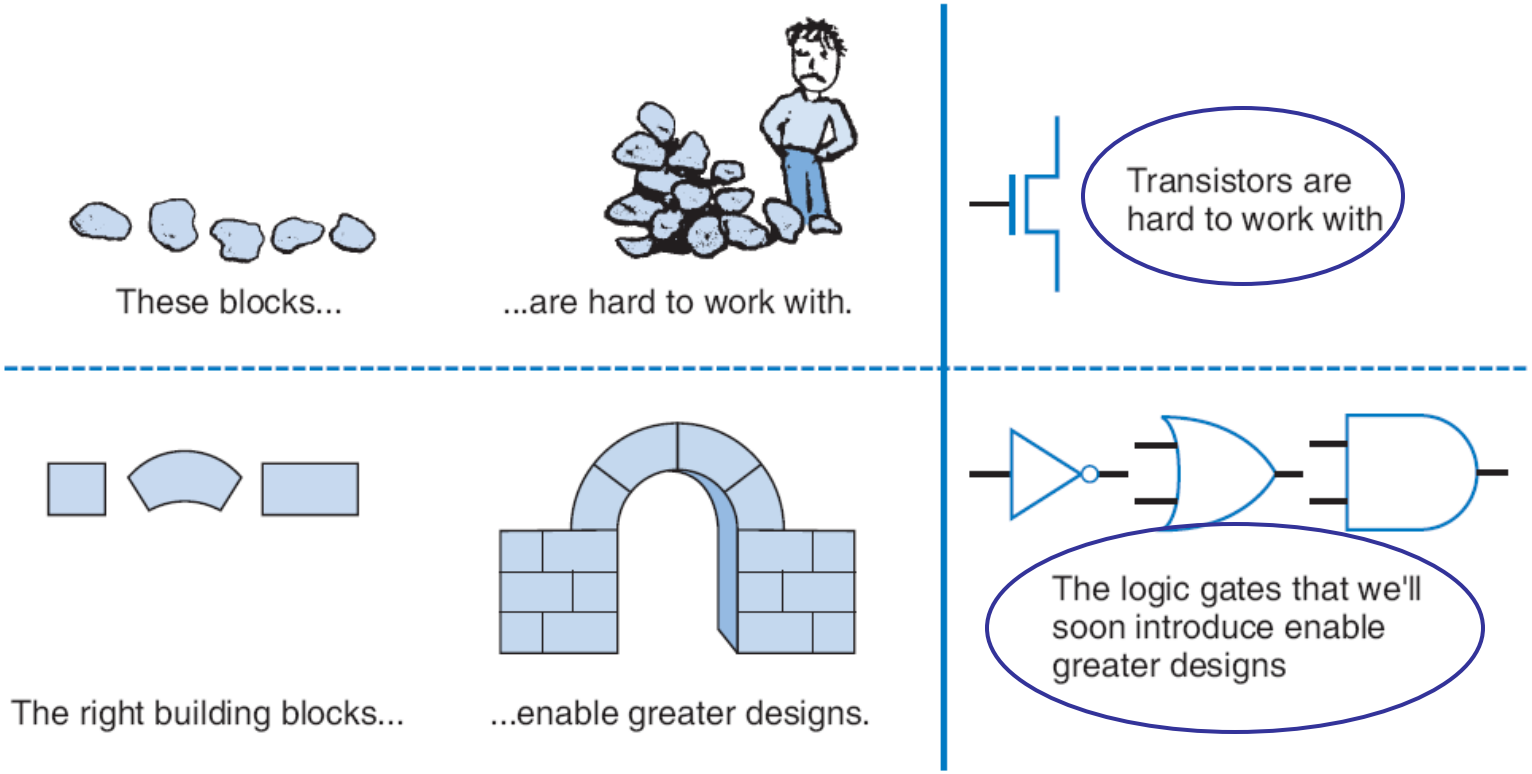

- **"Logic gates" are better digital circuit building blocks than switches (transistors)**

Logics in Human Language

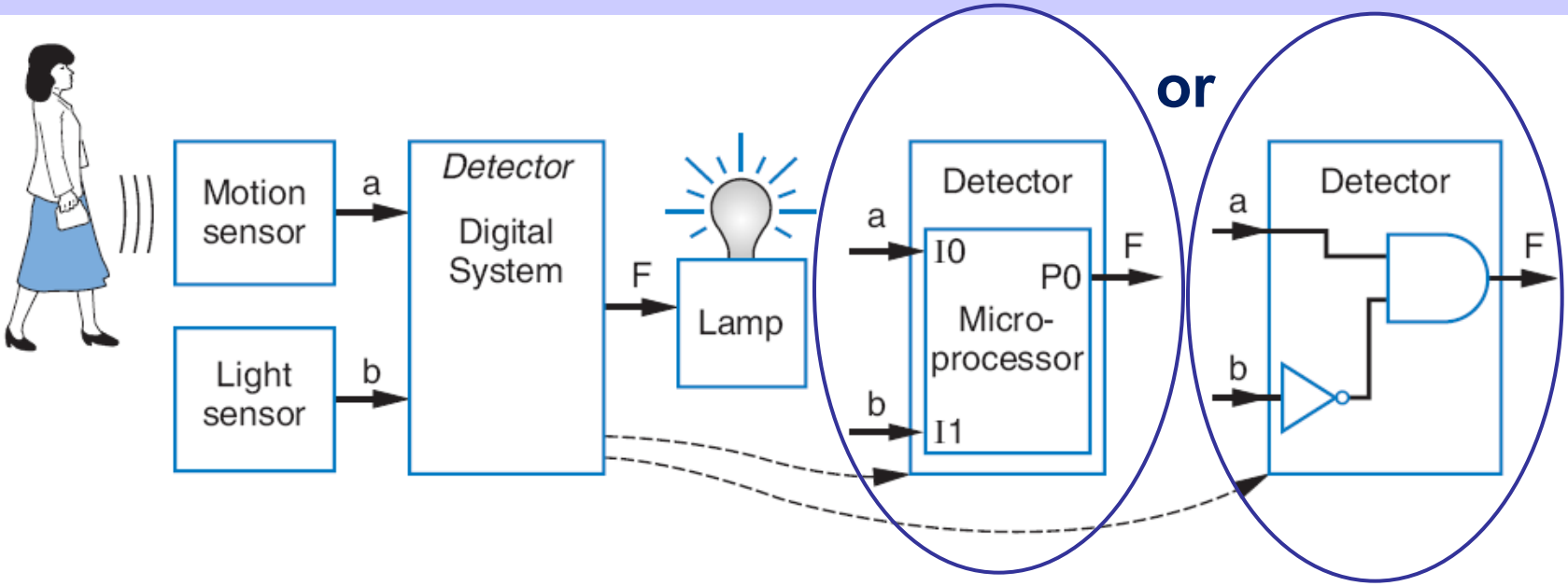

- **Motion-in-dark example**
  - Human language: Turn on lamp (F=1) when motion sensed (a) and no light (not b)
  - *Logic Equation*: F = a AND NOT(b) = ab’
  - *Logic circuit*: implementation using logic gates, AND and NOT, as shown

Example: Seat Belt Warning Light System

- **Design circuit for warning light**
- **Sensors**
  - s=1: seat belt fastened
  - k=1: key inserted
  - p=1: person in seat
- **Function description**
  - Light on if person in seat, and seat belt not fastened, and key inserted
- **Logic equation**

  w = p AND NOT(s) AND k

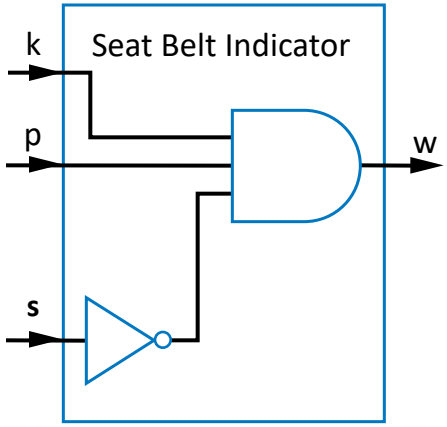

Example: Represent Logic Equation with Logic Gates

- **Q: Convert the following equation to logic gates:**

  F = a AND NOT(b OR NOT(c))

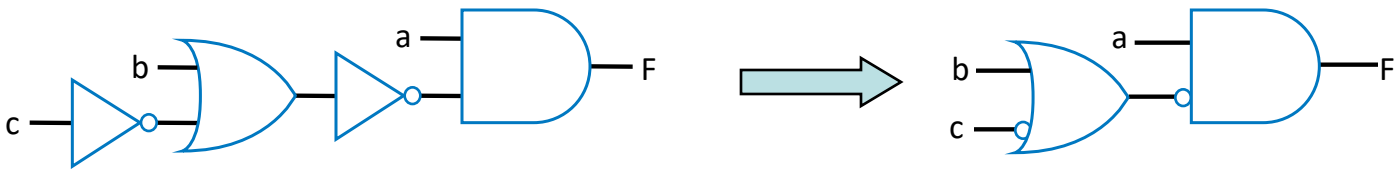

- **Precedence of Logic Operations**

  NOT > AND > OR

From Logic Equation to Logic Circuit

- There exists a correspondence between a Logic Equation and its logic circuit.

Variables + Constant binary values + Logic operators ➔ Logic Equation

Signals + Power Supplies + Logic gates ➔ Logic Circuit

- **Logic Circuit:**

  A net of logic gates.

Logic Equation and Logic Circuit

- **F = x OR (NOT y AND Z)**

  = x + y'z

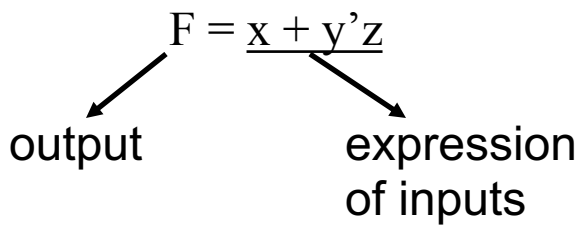

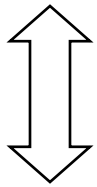

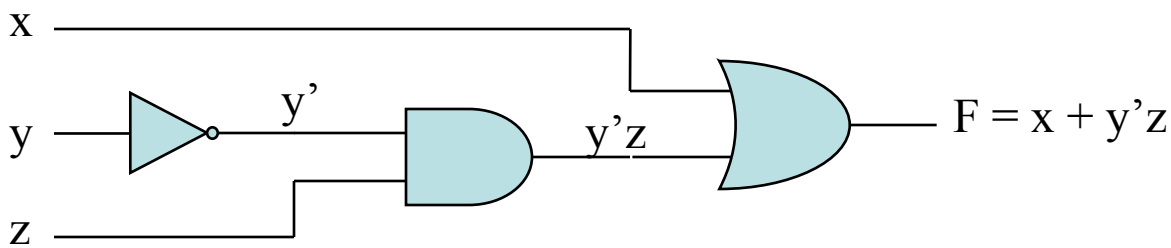

Build Truth Table

- **F = x + y'z**

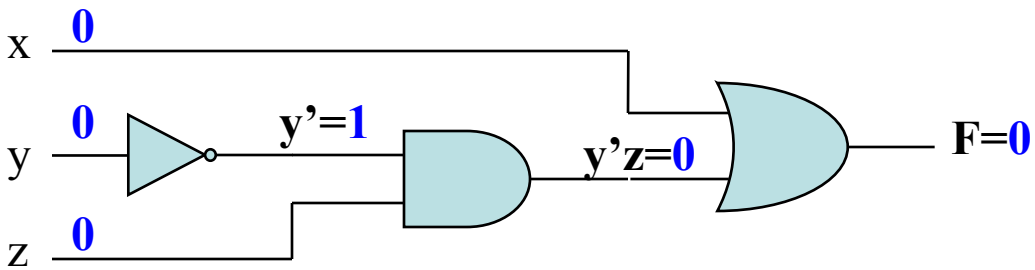

or

$$\boxed{\begin{aligned} F &= 0 + 0' \bullet 0 \\ &= 0 + 1 \bullet 0 \\ &= 0 + 0 \\ &= 0 \end{aligned}}$$

- **Truth table**

x	y	z	y'	y'z	F
0	**0**	**0**	**1**	**0**	**0**
0	0	1	?	?	?
0	1	0	?	?	?
0	1	1	?	?	?
1	0	0	?	?	?
1	0	1	?	?	?
1	1	0	?	?	?
1	1	1	?	?	?

Build Truth Table

- **F = x + y'z**

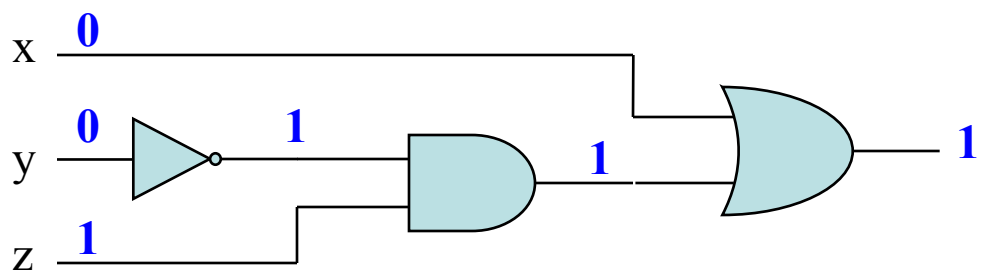

or

$$\begin{aligned} F &= 0 + 0' \bullet 1 \\ &= 0 + 1 \bullet 1 \\ &= 0 + 1 \\ &= 1 \end{aligned}$$

- **Truth table**

x	y	z	y'	y'z	F
0	0	0	1	0	0
0	**0**	**1**	**1**	**1**	**1**
0	1	0	?	?	?
0	1	1	?	?	?
1	0	0	?	?	?
1	0	1	?	?	?
1	1	0	?	?	?
1	1	1	?	?	?

Build Truth Table

- **F = x + y'z**

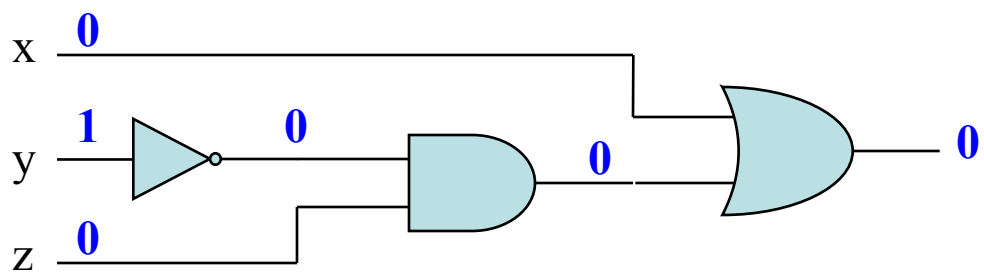

or

$$\begin{aligned} F &= 0 + 1' \bullet 0 \\ &= 0 + 0 \bullet 0 \\ &= 0 + 0 \\ &= 0 \end{aligned}$$

- **Truth table**

x	y	z	y'	y'z	F
0	0	0	1	0	0
0	0	1	1	1	1
0	**1**	**0**	**0**	**0**	**0**
0	1	1	?	?	?
1	0	0	?	?	?
1	0	1	?	?	?
1	1	0	?	?	?
1	1	1	?	?	?

Build Truth Table

- **F = x + y'z**

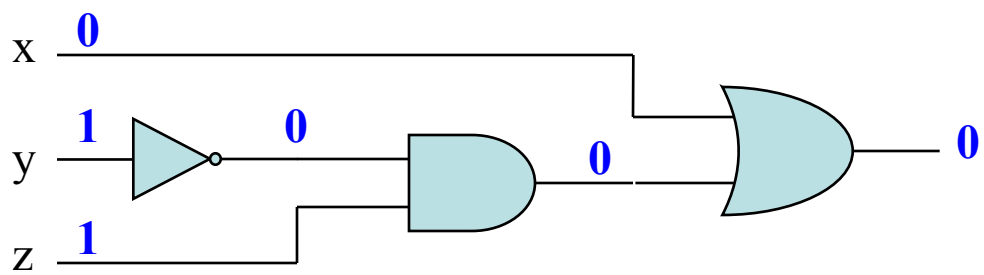

or

$$\begin{aligned} F &= 0 + 1' \bullet 1 \\ &= 0 + 0 \bullet 1 \\ &= 0 + 0 \\ &= 0 \end{aligned}$$

- **Truth table**

x	y	z	y'	y'z	F
0	0	0	1	0	0
0	0	1	1	1	1
0	1	0	0	0	0
0	**1**	**1**	**0**	**0**	**0**
1	0	0	?	?	?
1	0	1	?	?	?
1	1	0	?	?	?
1	1	1	?	?	?

Build Truth Table

- **F = x + y'z**

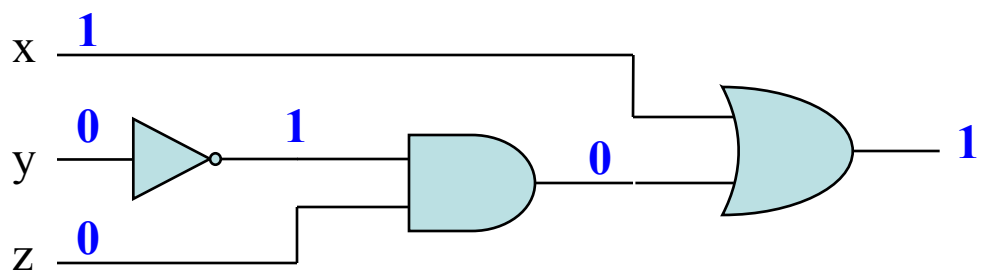

or

$$\begin{aligned} F &= 1 + 0' \bullet 0 \\ &= 1 + 1 \bullet 0 \\ &= 1 + 0 \\ &= 1 \end{aligned}$$

- **Truth table**

x	y	z	y'	y'z	F
0	0	0	1	0	0
0	0	1	1	1	1
0	1	0	0	0	0
0	1	1	0	0	0
1	**0**	**0**	**1**	**0**	**1**
1	0	1	?	?	?
1	1	0	?	?	?
1	1	1	?	?	?

Build Truth Table

- **F = x + y'z**

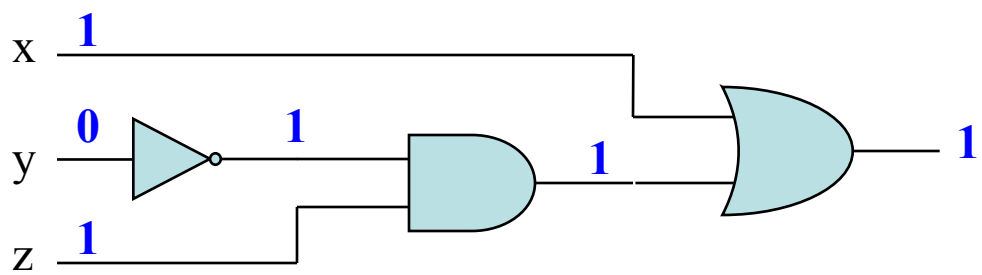

or

$$\begin{aligned} F &= 1 + 0' \bullet 1 \\ &= 1 + 1 \bullet 1 \\ &= 1 + 1 \\ &= 1 \end{aligned}$$

- **Truth table**

x	y	z	y'	y'z	F
0	0	0	1	0	0
0	0	1	1	1	1
0	1	0	0	0	0
0	1	1	0	0	0
1	0	0	1	0	1
1	**0**	**1**	**1**	**1**	**1**
1	1	0	?	?	?
1	1	1	?	?	?

Build Truth Table

- **F = x + y'z**

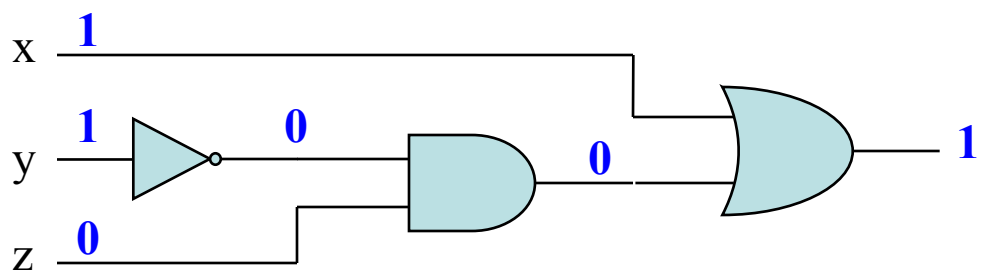

or

$$\begin{aligned} F &= 1 + 1' \bullet 0 \\ &= 1 + 0 \bullet 0 \\ &= 1 + 0 \\ &= 1 \end{aligned}$$

- **Truth table**

x	y	z	y'	y'z	F
0	0	0	1	0	0
0	0	1	1	1	1
0	1	0	0	0	0
0	1	1	0	0	0
1	0	0	1	0	1
1	0	1	1	1	1
1	**1**	**0**	**0**	**0**	**1**
1	1	1	?	?	?

Build Truth Table

- **F = x + y'z**

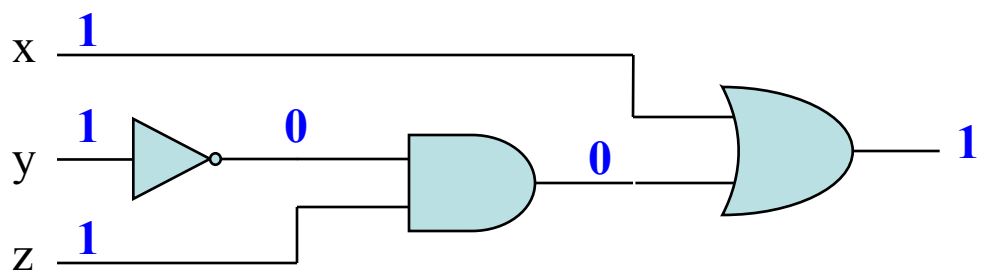

or

$$\begin{aligned} F &= 1 + 1' \bullet 1 \\ &= 1 + 0 \bullet 1 \\ &= 1 + 0 \\ &= 1 \end{aligned}$$

- **Truth table**

x	y	z	y'	y'z	F
0	0	0	1	0	0
0	0	1	1	1	1
0	1	0	0	0	0
0	1	1	0	0	0
1	0	0	1	0	1
1	0	1	1	1	1
1	1	0	0	0	1
1	**1**	**1**	**0**	**0**	**1**

Logic Equation, Truth Table, & Logic Circuit

- **Another example: G = x'y'z + x'yz + xy'**

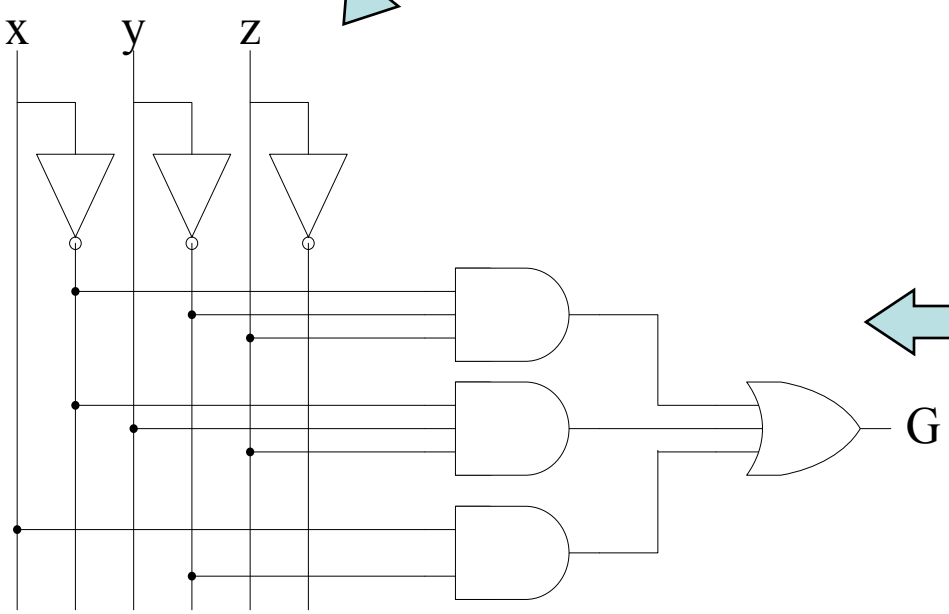

Gate Implementation

x	y	z	G
0	0	0	
0	0	1	
0	1	0	
0	1	1	
1	0	0	
1	0	1	
1	1	0	
1	1	1	

Truth Table

Create Truth Table

a	b	F
0	0	
0	1	
1	0	
1	1	

(a)

a	b	c	F
0	0	0	
0	0	1	
0	1	0	
0	1	1	
1	0	0	
1	0	1	
1	1	0	
1	1	1	

(b)

a	b	c	d	F
0	0	0	0	
0	0	0	1	
0	0	1	0	
0	0	1	1	
0	1	0	0	
0	1	0	1	
0	1	1	0	
0	1	1	1	
1	0	0	0	
1	0	0	1	
1	0	1	0	
1	0	1	1	
1	1	0	0	
1	1	0	1	
1	1	1	0	
1	1	1	1	

(c)

- **Q: Use truth table to define function F(a,b,c) that is 1 only when abc is 5 or greater in binary**

a	b	c	F
0	0	0	**0**
0	0	1	**0**
0	1	0	**0**
0	1	1	**0**
1	0	0	**0**
1	0	1	**1**
1	1	0	**1**
1	1	1	**1**

Timing Diagram

- **Timing diagrams show the response to changes on a signal in voltage levels with time**

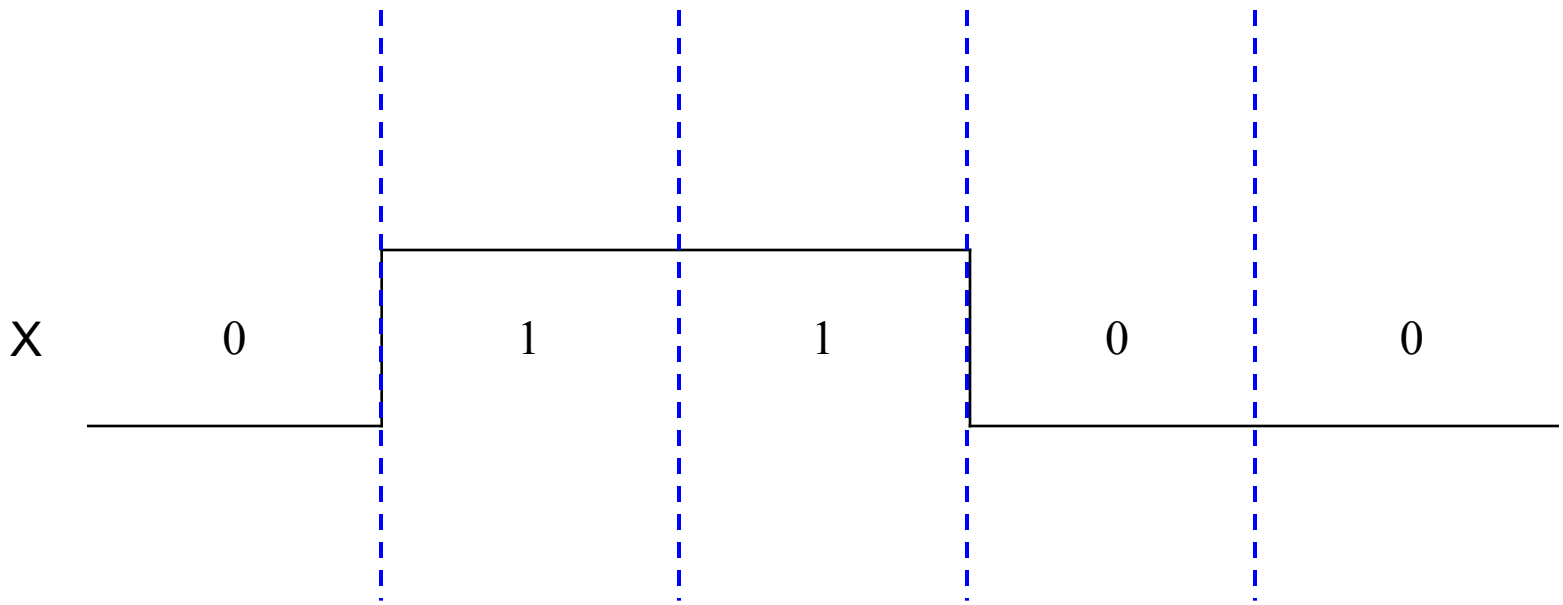

Timing Diagrams for Gates

xy		F
0	0	0
0	1	0
1	0	0
1	1	1

x+y		F
0	0	0
0	1	1
1	0	1
1	1	1

x	F
0	1
1	0

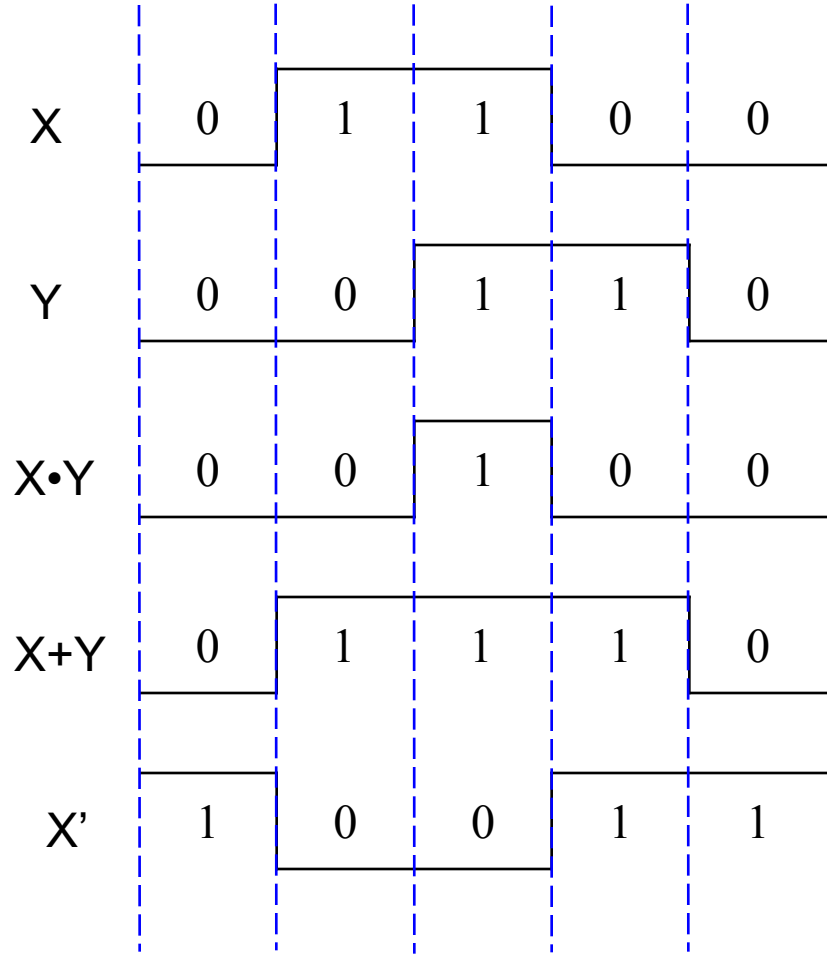

More Gates

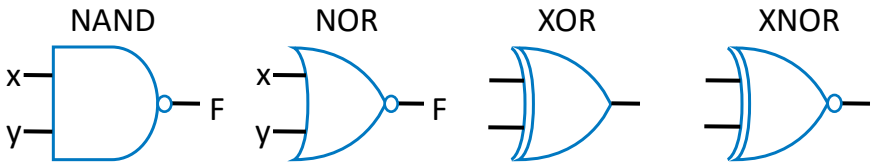

x	y	F
0	0	1
0	1	1
1	0	1
1	1	0

x	y	F
0	0	1
0	1	0
1	0	0
1	1	0

x	y	F
0	0	0
0	1	1
1	0	1
1	1	0

x	y	F
0	0	1
0	1	0
1	0	0
1	1	1

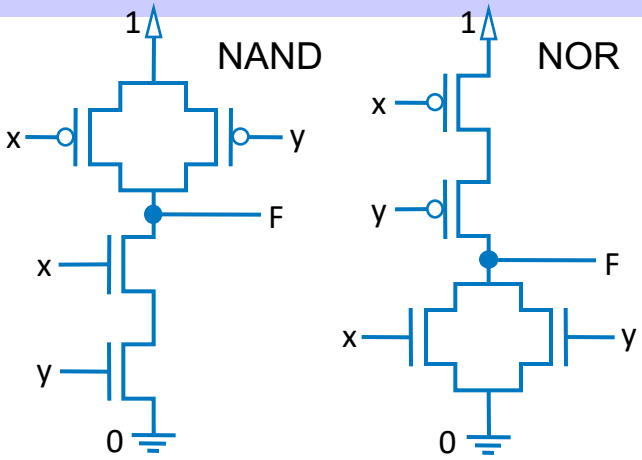

- NAND: Opposite of AND ("NOT AND")
- NOR: Opposite of OR ("NOT OR")
- XOR: outputs 1 when inputs have odd number of 1's
- XNOR: Opposite of XOR ("NOT XOR")

- AND in CMOS: NAND with NOT
- OR in CMOS: NOR with NOT
- So NAND/NOR more common

Detecting Overflow: Method 2

- **Simpler method: Detect difference between carry-in to sign bit and carry-out from sign bit**
- **overflow = c4 ⊕ c3**

```
 0 1 1 1        1 0 0 0        0 0 0 0
   0 1 1 1        1 1 1 1        1 0 0 0
 + 0 0 0 1      + 1 0 0 0      + 0 1 1 1
 ---------      ---------      ---------
   1 0 0 0        0 1 1 1        1 1 1 1
 overflow       overflow       no overflow
   (a)            (b)            (c)
```

If the carry into the sign bit column differs from the carry out of that column, overflow has occurred.

Some Circuit Drawing Conventions

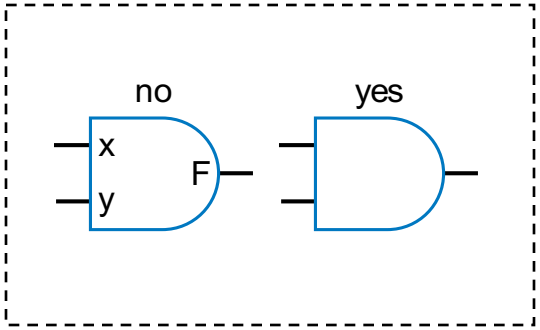

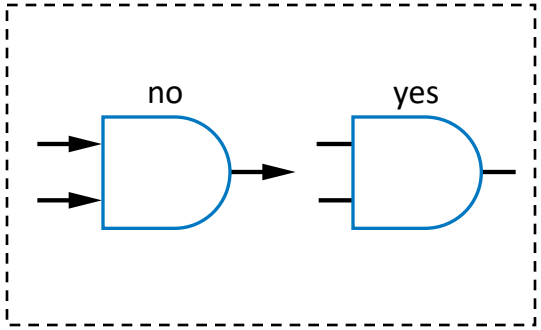

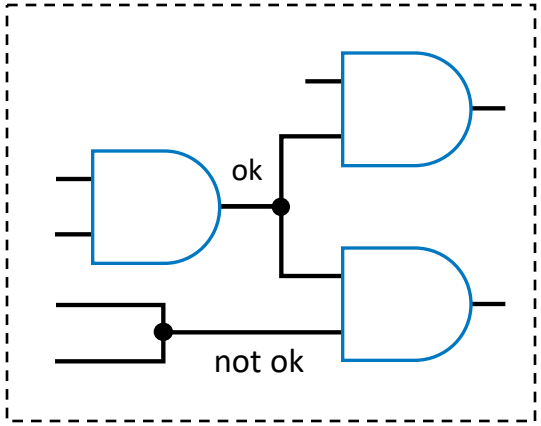

Avoid multi-driver problem!

Integrated Circuit

- **Integrated Circuit (IC) – chip**
  - Contains logic components and/or devices for constructing digital circuits
- **Integration Levels**
  - Small-Scale Integration (SSI)
    - Fewer than 10 gates
  - Medium-Scale Integration (MSI)
    - 10 to 1000 gates
  - Large-Scale Integration (LSI)
    - Thousands of gates
  - Very Large-Scale Integration (VLSI)
    - Millions of gates
  - Ultra Large-Scale Integration (ULSI)
    - Billions of gates
  - …

Integrated Circuit

- **TTL –** Transistor-Transistor Logic
- **ECL –** Emitter-Coupled Logic
- **MOS –** Metal-Oxide Semiconductor
- **CMOS –** Complementary MOS

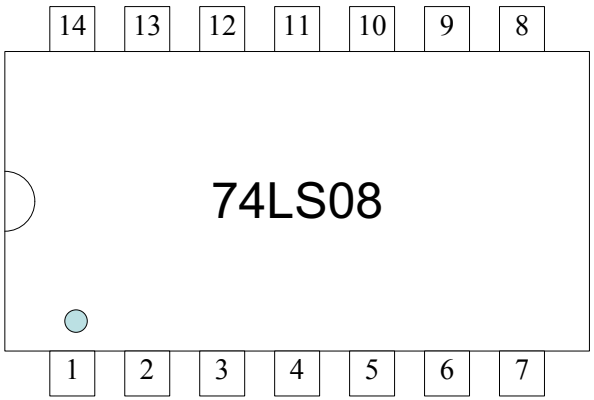

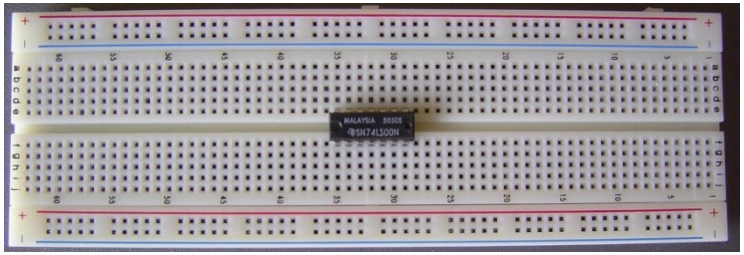
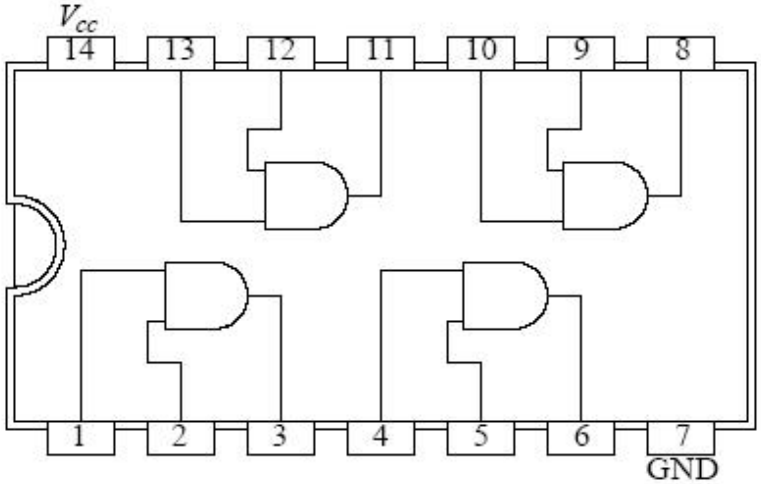
Chip placed on breadboard