View from Top side (Scale 1:1)

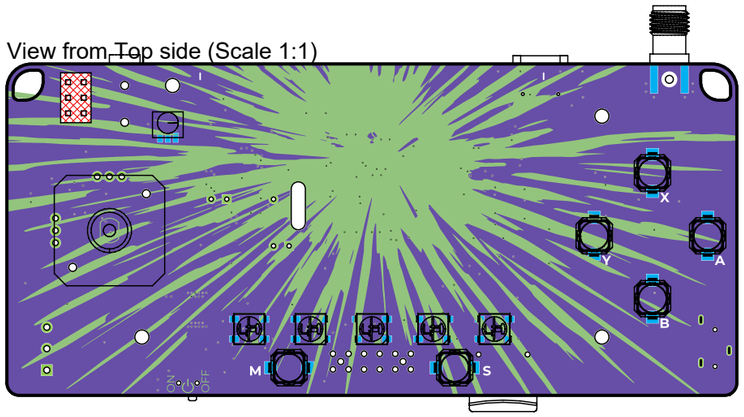

View from Bottom side (Scale 1:1)

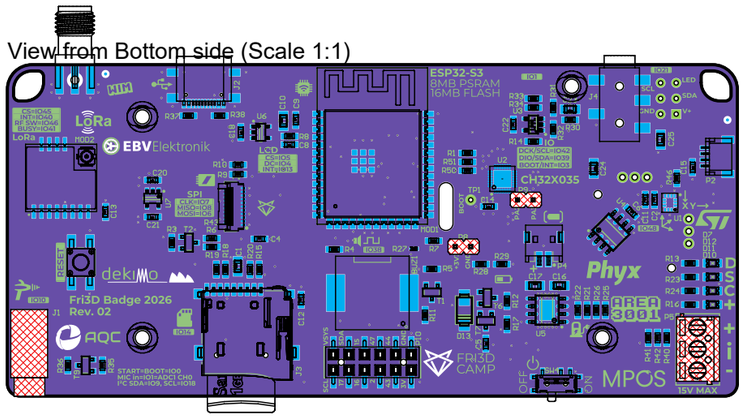

20x20