QUICK START GUIDE

ReVibe ANURA™

Self-powered monitoring system for vibrating screens

Revibe Energy AB 2024 ver.26.3.0

INTRODUCTION **3**
SYSTEM PARTS **3**
QUICK START INSTALLATION **4**
A. Install the Base Hub 4
B. Connect to Network 4
C. Mount the Transceiver(s) 5
D. Connect Transceiver(s) 5
E. Connection Indication – Transceiver 6
F. Activate the Sensor Node 6
G. Install the Sensor Node 7
H. Sensor Node Charging and Status 7
I. Data Collection 7
FIRMWARE UPDATES **8**
PRODUCT CARE **8**
General use 8
Cleaning 8
SUPPORT, WARRANTY & RMA ASSISTANCE **8**
RECYCLING **8**
CONTACT **9**
Manufacturer: 9

INTRODUCTION

Thank you for choosing the ReVibe Anura™ self-powered monitoring system for vibrating screens.

ReVibe Anura™ is a fit-and-forget, self-powered industrial monitoring system designed to track the motion of vibrating screens using synchronized wireless sensor nodes. The system wirelessly transmits data to cloud services or stores it locally, where it can be accessed by users to assess screen condition, support predictive maintenance, and ensure reliable operation.

SYSTEM PARTS

Depending on the purchased configuration, the number of included components may vary. A complete ReVibe Anura™ monitoring system for vibrating screens typically includes the following parts:

Name	Part no
System components	
Anura™ Base hub	10070
Anura™ TR1 Transceiver	10064
Anura™ VS1 Vibration sensor	10067
Transceiver cable, 30m	10072
Mounting accessories	
Anti slip mounting guide	20332
Strap Hose Clamp	40006
Double socket arm	40007
Ball adapter with AMPS Plate	40008

(Note: An ethernet cable (not included) is required to connect the Base Hub to your network infrastructure.)

QUICK START INSTALLATION

A. Install the Base Hub

Mount the Base Hub vertically, ensuring that all cables exit from the bottom of the enclosure. Follow all applicable local electrical regulations during installation. Power the Base Hub using a standard wall outlet.

B. Connect to Network

Use an Ethernet cable (not included) to connect port 1 on the Fitlet IoT Gateway (mounted inside the Base Hub) to a router or modem. Route the cable through the pre-drilled cable entry in the base hub and secure it using the provided grommet to maintain the IP65 protection rating.*

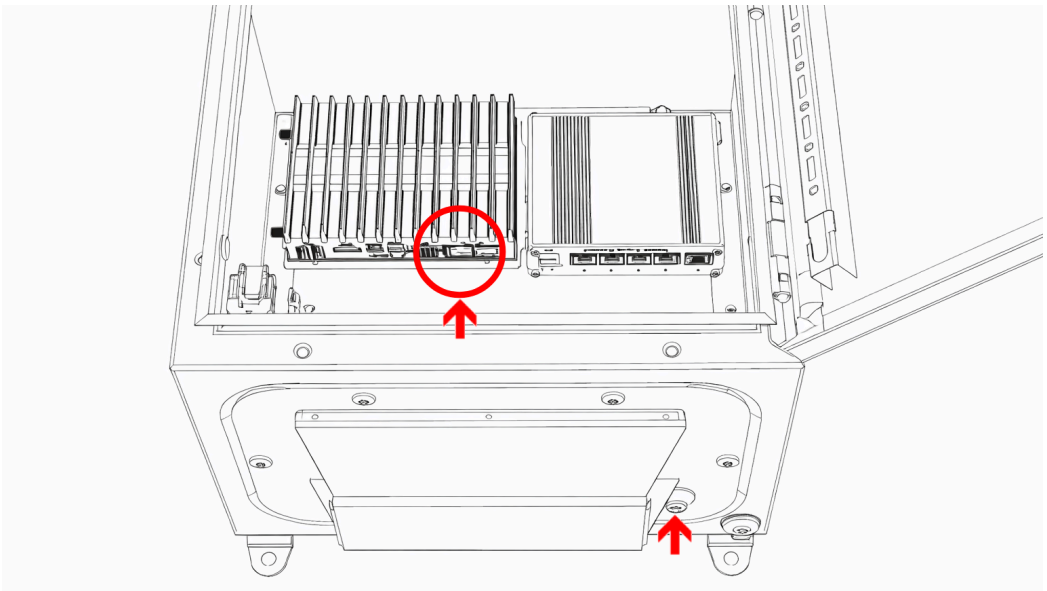

*The IP65 rating indicates full protection against dust ingress and protection against low-pressure water jets from any direction.

C. Mount the Transceiver(s)

Use the included mounting hardware to secure the transceiver(s) at the desired location(s). For optimal communication performance, ensure a clear line of sight between the transceiver(s) and the sensor nodes whenever possible.

Secure the mount to a stable structure (for example, a pole or railing).

D. Connect Transceiver(s)

Connect the transceiver(s) to the available PoE ports on the Teltonika TSW101 switch using the supplied RJ45 to Neutrik etherCON transceiver cable(s).

Connect the transceiver cable connector to the port located at the bottom of the transceiver. Upon startup, eight orange LEDs on the transceiver indicate power-up and readiness.

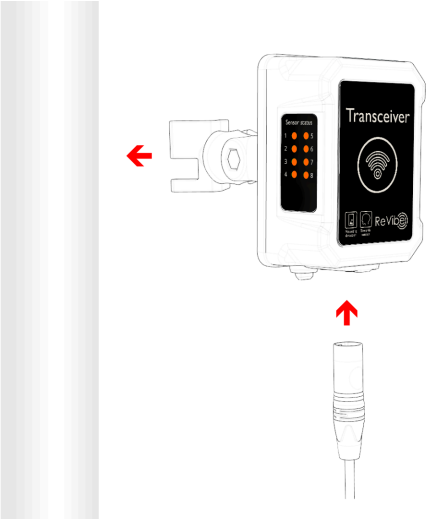

Transceiver with mount installed. Fixate the mount to a structure (e.g. pole or railing). Connect the Neutrik etherCON connector to the port located at the bottom of the transceiver.

E. Connection Indication – Transceiver

The LED indicators on the transceiver provide information about connection status:

a. Blue LED: The transceiver is attempting to connect to a sensor node.
b. Solid green LED: A connection to the sensor node has been successfully established.
c. Blinking green LED: Data is actively being transmitted from the sensor node.

a.

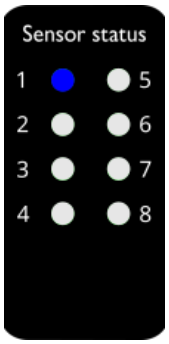

b.

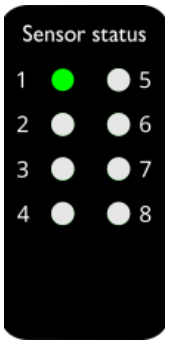

c.

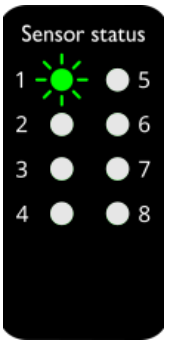

F. Activate the Sensor Node

Locate the activation hole closest to the single top magnet on the sensor node. Using a thin, blunt object (such as a ballpoint pen), press and hold the button inside the hole until a green LED illuminates. This indicates that the sensor node is activated.

To power off the sensor node, press and hold the button again and release it when a red LED blinks.

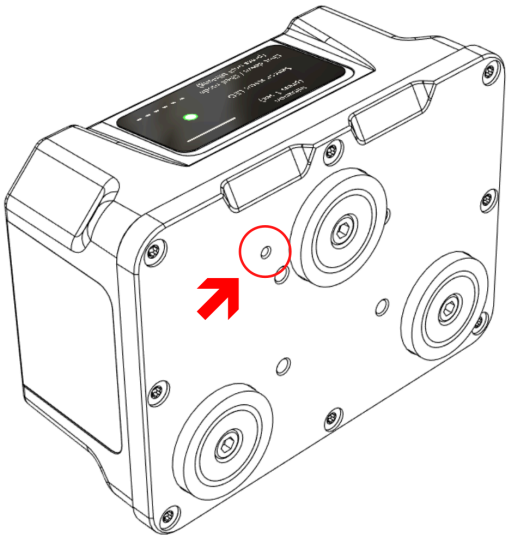

G. Install the Sensor Node

IMPORTANT! To ensure correct operation of the energy harvesting mechanism, the vibration pattern of the machine must be taken into account when choosing mounting orientation of the sensor. The sensor must be mounted so that the projected component of the machine's vibration in the indicated harvesting direction fulfills the minimum requirements for vibrations

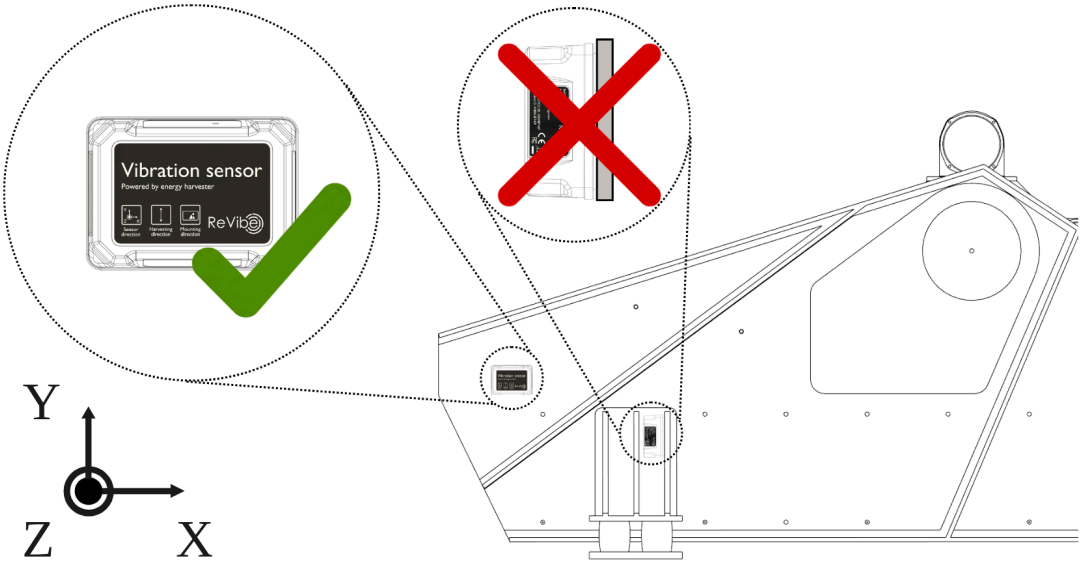

H. Sensor Node Charging and Status

The sensor node contains an energy harvester and a rechargeable power cell. The sensor comes delivered in a charged state. Maximum charge is 4.2V and the sensor will operate until the discharged state of 2.9V is reached. When discharge is reached the sensor node will turn off in order to protect the battery cell.

When the sensor node is installed on a vibrating screen that is moving within specified frequency and amplitude, the harvester will charge the battery cell until 4.2V is reached.

I. Data Collection

When the vibrating screen is in operation, the sensor nodes transmit vibration data according to the configured user settings. Data is delivered to the selected endpoint.

The system continuously transmits health data (ambient temperature, battery voltage, harvesting voltage and RSSI) even when the vibrating screen is not in operation.

FIRMWARE UPDATES

The TR1 transceiver and VS1 sensor node support firmware updates. Gateway software updates are performed by ReVibe Energy in coordination with the customer. Refer to the individual component user manuals for detailed firmware update instructions.

PRODUCT CARE

To ensure long-term performance and reliability, follow the guidelines below.

General use

Do not drop, throw, or subject the product to excessive force, as this could damage the enclosure or internal components.

Cleaning

Clean the enclosure using a soft, damp cloth. Do not use abrasive materials or harsh cleaning agents, as these may damage the surface finish.

SUPPORT, WARRANTY & RMA ASSISTANCE

For product support, warranty claims, or to initiate an RMA (Return Merchandise Authorization), please visit the ReVibe Energy website for up-to-date resources and instructions.

https://revibeenergy.com/

RECYCLING

This product is marked with the crossed-out wheeled bin symbol, indicating that it must not be disposed of with household waste. The product should be delivered to an authorized collection point for recycling of electrical and electronic equipment.

Proper recycling helps reduce environmental impact, protects human health, and promotes sustainable reuse of materials. For additional information, contact your local authority or the retailer where the product was purchased.

CONTACT

Manufacturer:

Revibe Energy AB
Mölndalsvägen 95
412 63 Göteborg
Sweden
+46 (0) 31 24 23 22
www.revibeenergy.com