TECHNICAL MANUAL

VS10-C

10075 ANURA Vibration sensor powered by rechargeable battery

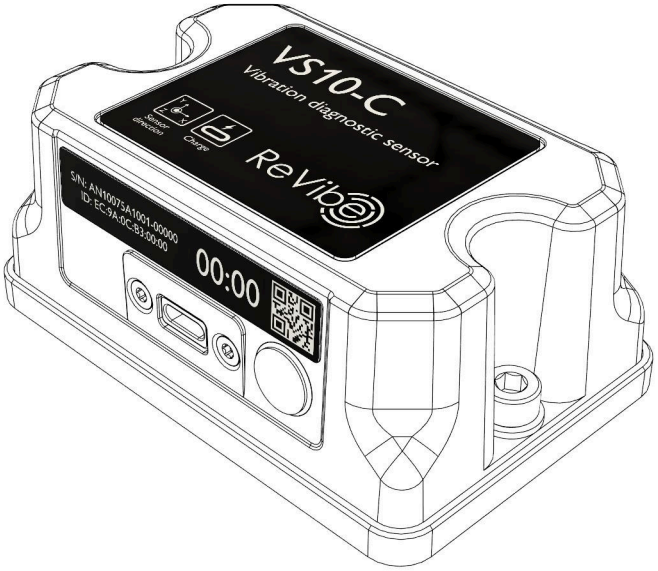

INTRODUCTION 3
PACKAGE CONTENTS 3
SETTINGS 3
Raw Vibration Data 3
Health Monitoring 3
OPERATION 4
POWER MODES 4
1. Powering On: 4
2. Powering Off: 4
CHARGING 5
BATTERY LIFE 5
INSTALLATION 5
TROUBLESHOOTING 5
FIRMWARE UPDATES 6
PRODUCT CARE 6
General use: 6
Cleaning: 6
SUPPORT, WARRANTY & RMA ASSISTANCE 6
RECYCLING 6
VS10-C TECHNICAL SPECIFICATION 7
Power supply: 7
Power consumption: 7
Enclosure material: 7
Ingress protection: 7
Typical weight (w. 2x 32mm pot magnets) : 7
Dimensions (excluding mounting accessories): 7
Dimensions: (w. 2x 32mm pot magnets.) 8
Operating Temperature: 8
Storage Temperature: 8
Relative humidity: 8
Mounting interface: 8
Radio communication: 8
Acceleration measurements: 8
Temperature sensor measurement accuracy: 9
Edge data storage: 9
Time synchronization offset: 9
Expected product lifetime: 9
Bounding box 9
Accelerometer position 10
CONTACT 11
Manufacturer: 11

INTRODUCTION

The **VS10-C (10075)** is a battery-powered sensor designed to wirelessly transmit captured measurement data.
The VS10-C is designed to work with the TR1 (10064), TR10-USB (10078) and TR11-USB (10082) transceivers, utilizing the 2.4GHz spectrum for communication.

PACKAGE CONTENTS

Name:	Part no:
VS10-C Vibration sensor	10075

SETTINGS

The VS10-C measures, collects, and transmits the following data while allowing user configuration:

Raw Vibration Data

The VS10-C captures and transmits snippets of raw acceleration data (g) from the X, Y, and Z axes at user-defined sample rates and intervals.

- **Sample Rate:**:
  - 512 Hz
  - 1024 Hz
  - 2048 Hz
  - 4096 Hz
  - 8192 Hz
  - 16384 Hz
- **Interval:**
  How often the sensor records samples.
- **Duration:**
  Set the length of each sample.

Health Monitoring

The VS10-C provides real-time status updates, including operational health and connectivity, at user-defined intervals. The following parameters are monitored and sent by the sensor every minute:

- **Temperature** (°C)
- **RSSI** (dBm)
- **Voltage** (mV)

  Depending on whether you are using the VS10-C in a temporary measurement scenario (Vibreshark) or a permanent monitoring scenario (Base Hub), please refer to the Base Hub manual or the settings section in the Vibreshark application.

OPERATION

The VS10-C sensor is designed for field diagnostic measurements and features a compact, rechargeable design.

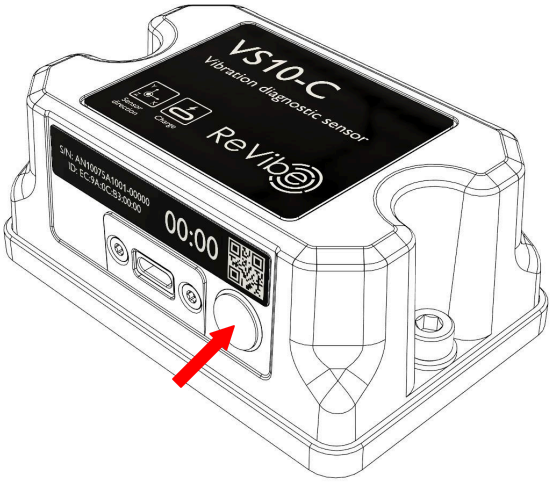

POWER MODES

1. Powering On:

1. Press the power button located near the USB-C port on the side of the unit.
2. Press once— the button will turn green. (If the VS10-C is discharged, it will blink red rapidly.)
3. The LED will blink green to indicate that the sensor is active and recording movement.

2. Powering Off:

1. Press and hold the power button near the USB-C port on the side of the unit.
2. The button will turn red, indicating the unit is off.
3. Release the button.

Note: To conserve battery life, the unit will automatically power off after 30 minutes if it is not connected.

CHARGING

The VS10-C has a USB-C connector for charging. It can be powered using a power bank or a USB-charger. (See Specifications, Power supply)

Charging is not allowed below -20°C.

Do not charge the device while in use. Full recharge from empty takes approx. 4h.

1. Check Compatibility – Ensure the charger supports USB-C charging.
2. Connect the USB into the VS10-C charging port.
3. Confirm Charging – The power button indicates the charging state with the following colors.
    a. Charging (Blue)
    b. Charged (Green)

BATTERY LIFE

The VS10-C has an operational battery life of up to ~120 hours before automatically shutting down to prevent battery cell damage.

The battery is rated for up to 5000 full recharge cycles.

Note: To conserve battery life, the unit will automatically power off after 30 minutes if it is not connected.

INSTALLATION

The VS10-C attaches to the measurement target in two ways:

- **Temporary installation:** Powerful neodymium magnets provide a strong yet removable attachment.
- **Permanent installation:** The unit can be attached using the 2x M6 threaded trough holes, 2x M5 screws, or affixed with suitable double-sided adhesive.

TROUBLESHOOTING

VS10-C

- TBD

FIRMWARE UPDATES

The VS10-C supports over-the-air upgrades using BLE, allowing users to update its firmware through the API or SDK.

PRODUCT CARE

To ensure the longevity and optimal performance of VS10-C, please follow these care instructions:

General use:

Do not drop, throw, or subject the product to excessive force, as this could damage the plastic casing, aluminum plate, or internal components.

Cleaning:

Use a soft, damp cloth to gently clean the plastic casing and aluminum bottom plate. Avoid abrasive materials or harsh cleaning agents, as they may scratch the surfaces or damage the finish.

SUPPORT, WARRANTY & RMA ASSISTANCE

For help with product support, warranty claims, or initiating an RMA (Return Merchandise Authorization), our website provides all the resources needed.

https://revibeenergy.com/

RECYCLING

Disposal of Electrical and Electronic Equipment
This product is marked with the crossed-out wheelie bin symbol to indicate that it must not be disposed of as general household waste. Instead, it should be taken to an appropriate collection point for recycling electrical and electronic equipment. Proper disposal helps prevent potential harm to the environment and human health and promotes the sustainable reuse of materials. For more detailed information on disposal and recycling, please contact your local authorities or the retailer where the product was purchased.

VS10-C TECHNICAL SPECIFICATION

Power supply:

Lithium Ion Rechargeable battery 1.32 Wh.
Charged via USB-C, 5V.

Power consumption:

Mode/configuration	Power consumption
Sampling rate: 1024 Hz, duration: 3 seconds, transmission interval: 5 minutes	~8 mW
Sampling rate: 8192 Hz, duration: 5 seconds, transmission interval: 5 minutes	~10 mW
Standby mode	<1 mW
Shutdown	~20 µW

Enclosure material:

Bottom plate: Anodized aluminum alloy, color “Orange”.
Casing: PA6, Black.

Ingress protection:

IP65

Typical weight (w. 2x 32mm pot magnets) :

290g.

Dimensions (excluding mounting accessories):

90x60x38 mm (height x width x depth)

Dimensions: (w. 2x 32mm pot magnets.)

90x60x46 (height x width x depth)

Operating Temperature:

-40°C to +80°C

Storage Temperature:

0°C to +45°C (-40°F to +140°F)

Relative humidity:

0 to 95%, non-condensing.

Mounting interface:

- 2x M5 threaded holes, (c/c) 50mm for pot magnets.
- 2x M6 threaded holes, (c/c) 76.5mm. Use M5 for through hole mounting.

Radio communication:

Tx Power:
0 dBm

Rx Sensitivity:
-98 dBm

Data Rates:
Up to 1 Mbps

Frequency:
2.400 to 2.483 GHz

Antenna Gain:
typ. 6dBi

Acceleration measurements:

3 Axis MEMS accelerometer.

Range
±16g

Sampling rate
Selectable: 256, 512, 1024, 2048, 4096, 8192, 16384.

Sensor data filtering
3dB point at ⅓ of the selected sampling rate.

Accelerometer frequency response
XY-plane: dc to 4kHz (±3 dB point)
Z-axis dc to 1.6kHz (±3 dB point)

Temperature sensor measurement accuracy:

Typ. ± 0.5 °C -40°C to 125°C
Typ. ± 0.25°C, 0°C to +65°C

Edge data storage:

Non persistent 64Mbit RAM.

Time synchronization offset:

Typ. <5 µs

Expected product lifetime:

>2 years

Bounding box

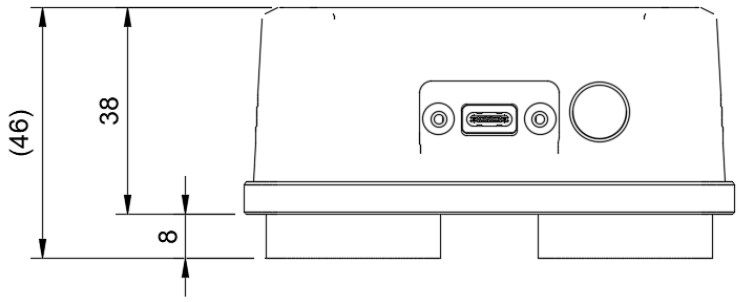

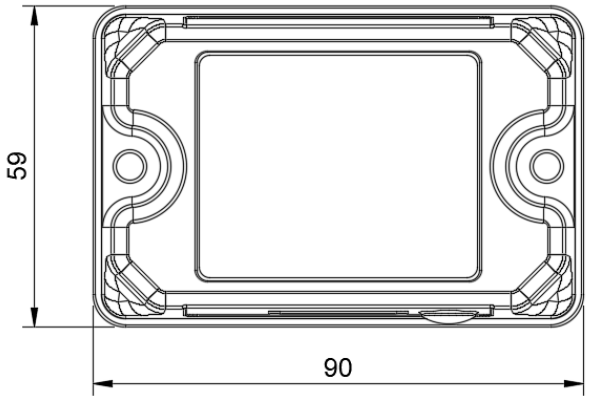

Accelerometer position

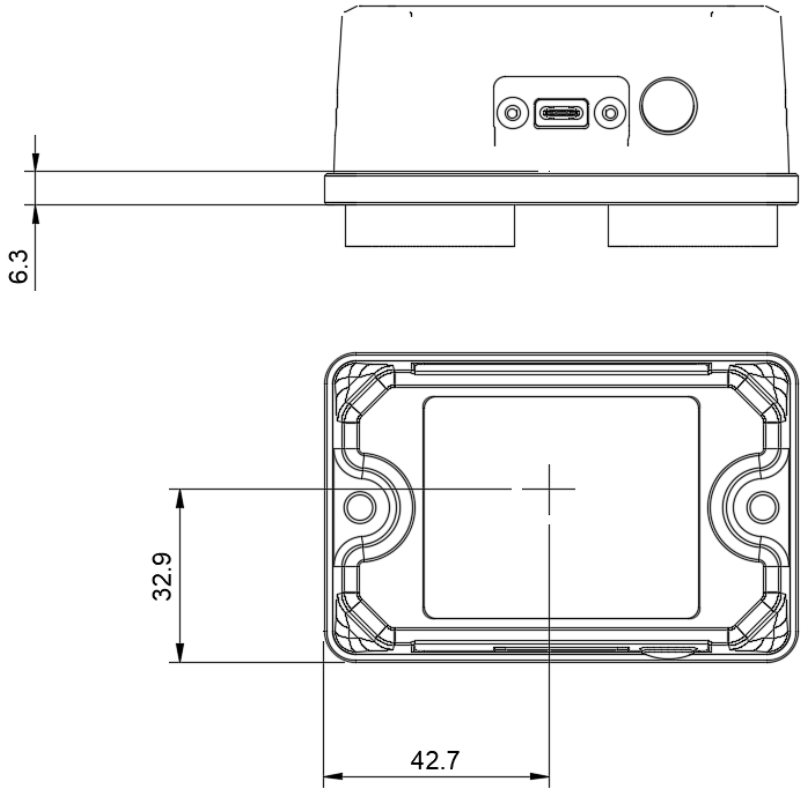

CONTACT

Manufacturer:

Revibe Energy AB
Mölndalsvägen 95
412 63 Göteborg
Sweden
+46 (0) 31 24 23 22
www.revibeenergy.com