NUCLEO-XXXXRX

MB1136

Table of contents

Sheet 1: Project overview (this page)

Sheet 2: Top & Power

Sheet 3: MCU

Sheet 4: STLINK/V2-1

Sheet 5: Extension connectors

Legend

General comment such as function title, configuration, ...

Text to be added to silkscreen.

Warning text.

Notes to generate the board layout.

Open Platform License Agreement

The Open Platform License Agreement (“Agreement”) is a binding legal contract between you ("You") and STMicroelectronics International N.V. (“ST”), a company incorporated under the laws of the Netherlands acting for the purpose of this Agreement through its Swiss branch 39, Chemin du Champ des Filles, 1228 Plan-les-Ouates, Geneva, Switzerland.

By using the enclosed reference designs, schematics, PC board layouts, and documentation, in hardcopy or CAD tool file format (collectively, the “Reference Material”), You are agreeing to be bound by the terms and conditions of this Agreement. Do not use the Reference Material until You have read and agreed to this Agreement terms and conditions. The use of the Reference Material automatically implies the acceptance of the Agreement terms and conditions.

The complete Open Platform License Agreement can be found on www.st.com/opla.

U_Top
Top.SchDoc

Title: **Project Overview**		
Project: **NUCLEO-XXXXRX**		
Variant: [No Variations]		
Revision: C-04		Reference: MB1136
Size: A4	Date: 17-AUG-2022	Sheet: 1 of 5

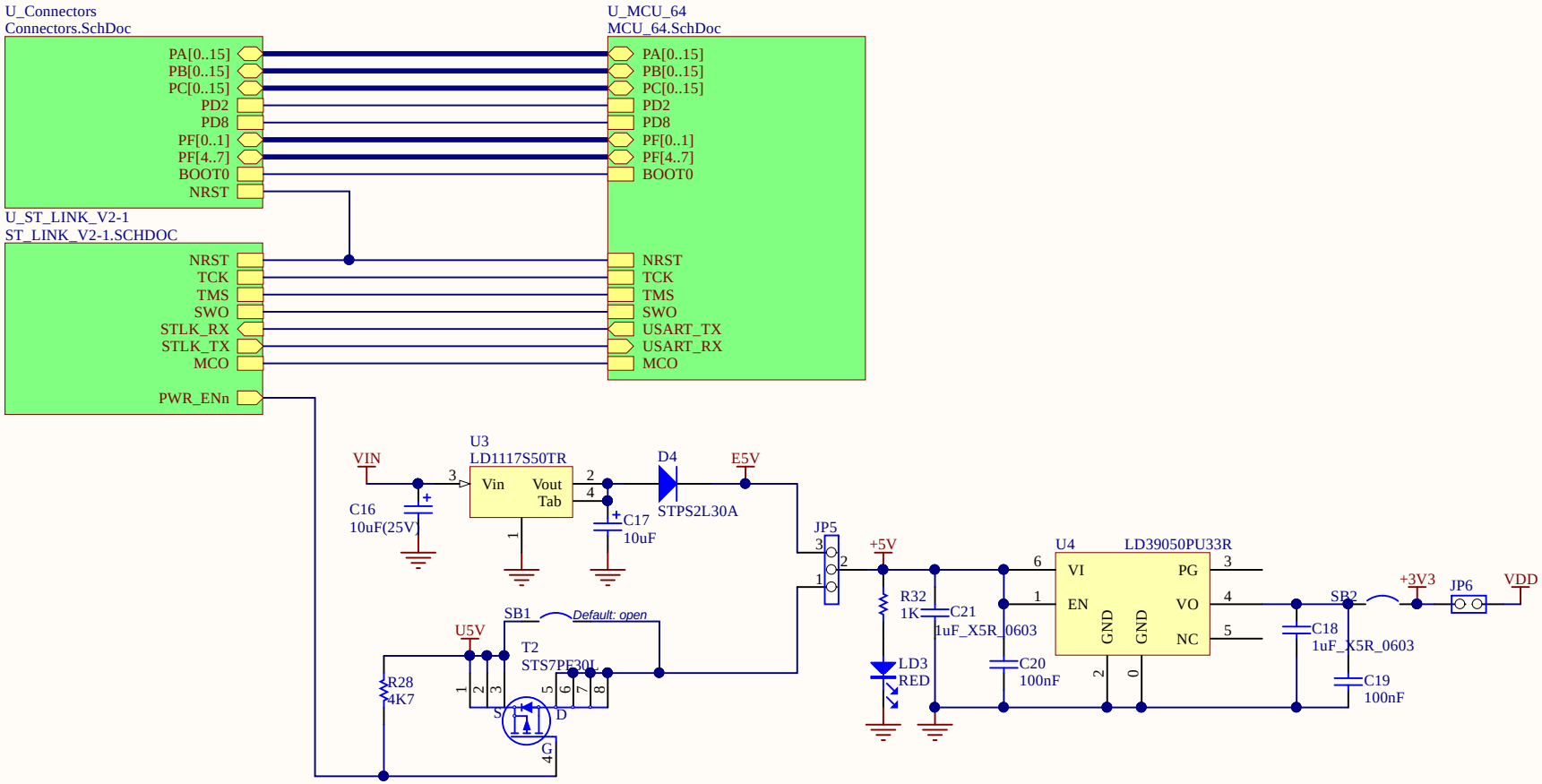

Title: **TOP & POWER**		
Project: **NUCLEO-XXXXRX**		
Variant: [No Variations]		
Revision: C-04		Reference: MB1136
Size: A4	Date: 17-AUG-2022	Sheet: 2 of 5

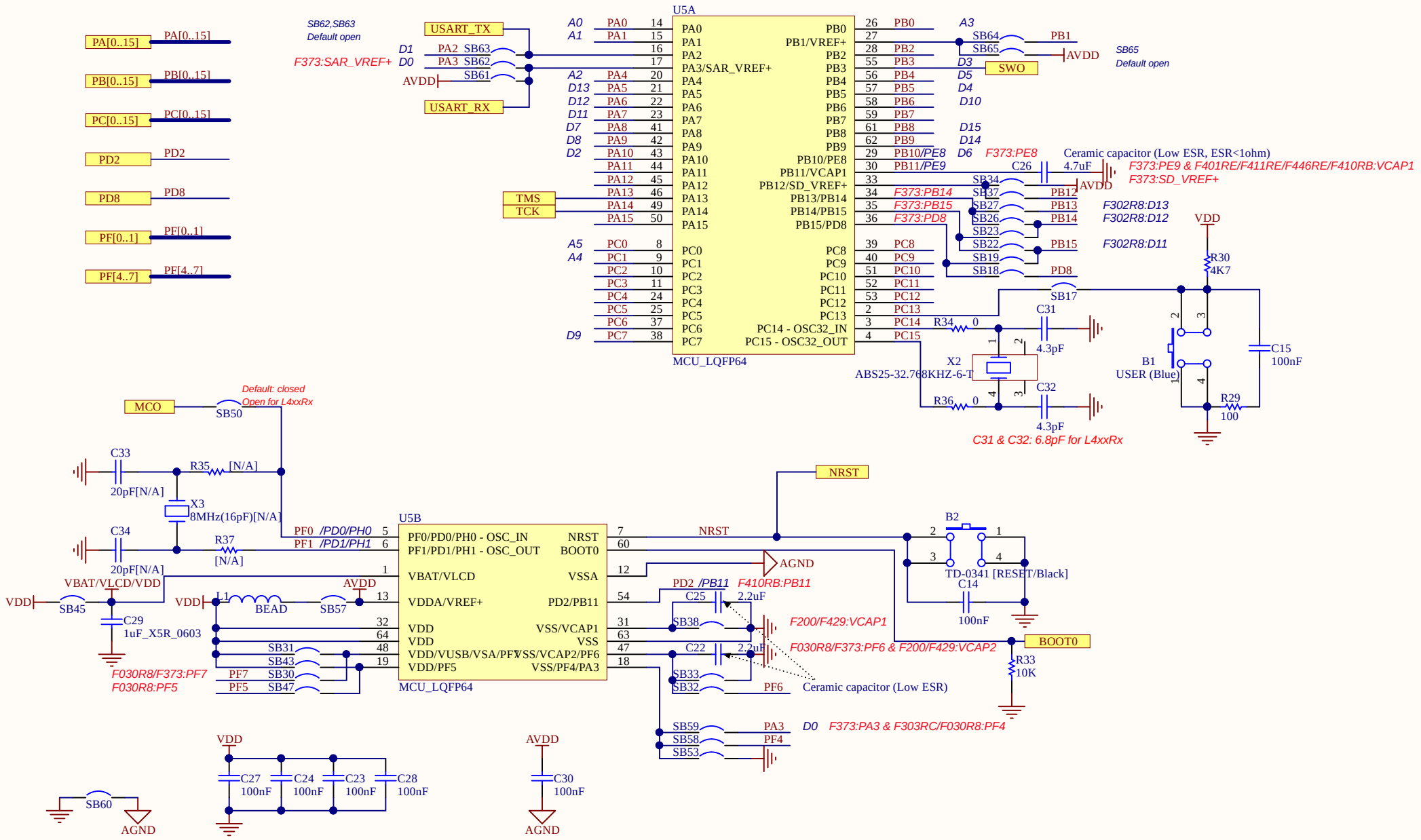

Title: **MCU**		
Project: **NUCLEO-XXXXRX**		
Variant: [No Variations]		
Revision: C-04		Reference: MB1136
Size: A4	Date: 17-AUG-2022	Sheet: 3 of 5

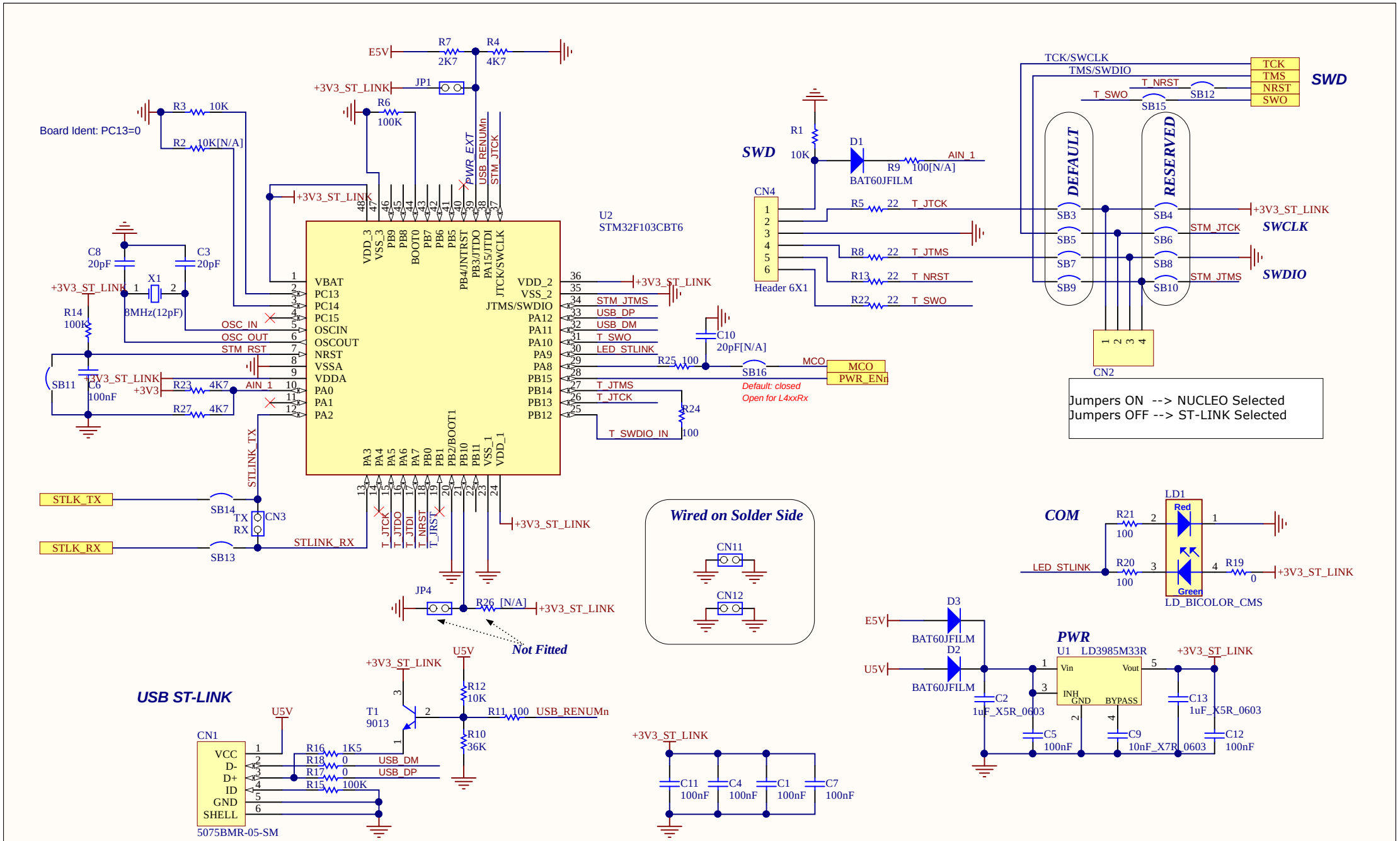

Title: **STLINK/V2-1**		
Project: **NUCLEO-XXXXRX**		
Variant: [No Variations]		
Revision: C-04		Reference: MB1136
Size: A4	Date: 17-AUG-2022	Sheet: 4 of 5

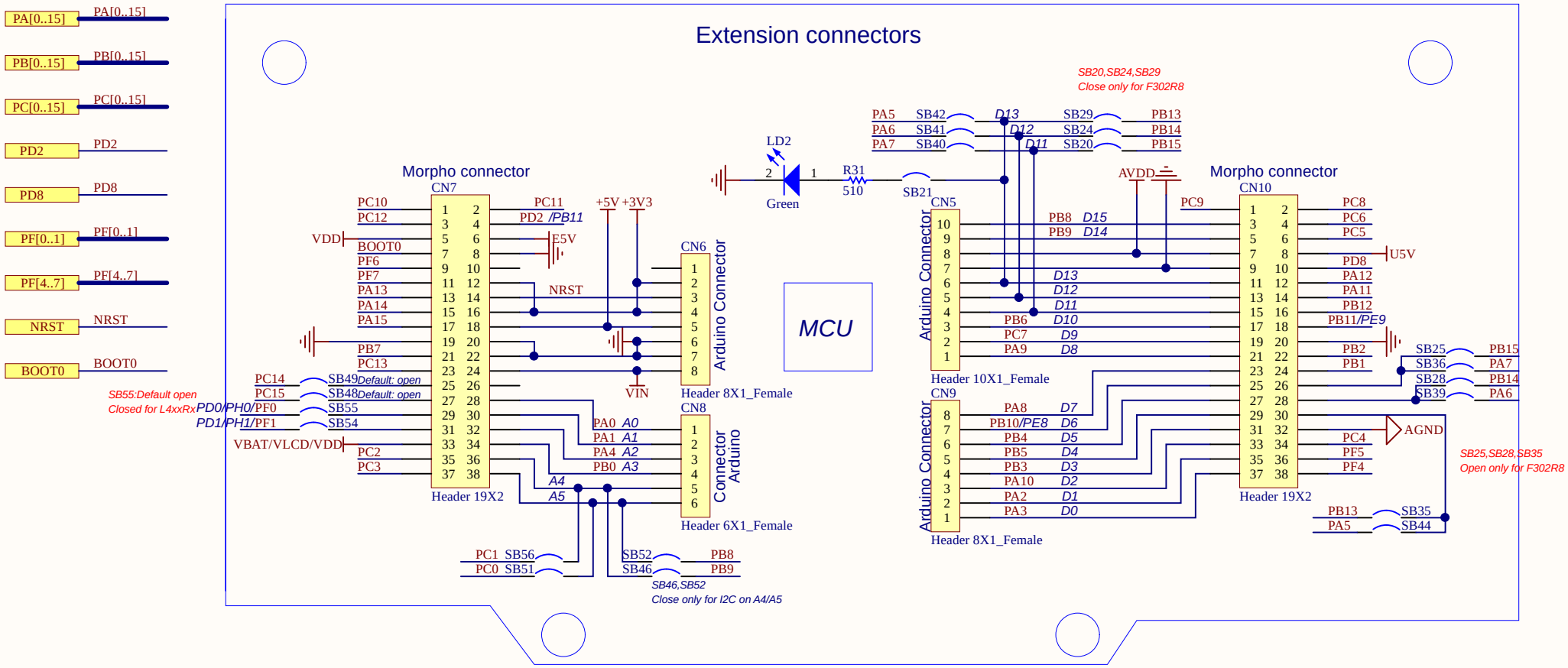

Title: **Extension connectors**		
Project: **NUCLEO-XXXXRX**		
Variant: [No Variations]		
Revision: C-04		Reference: MB1136
Size: A4	Date: 17-AUG-2022	Sheet: 5 of 5