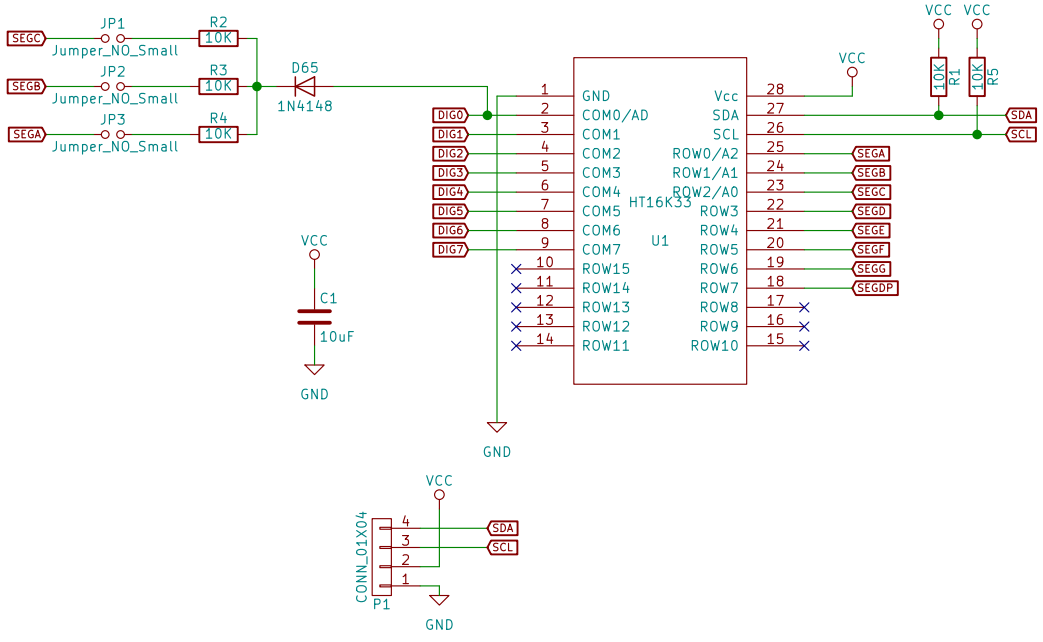

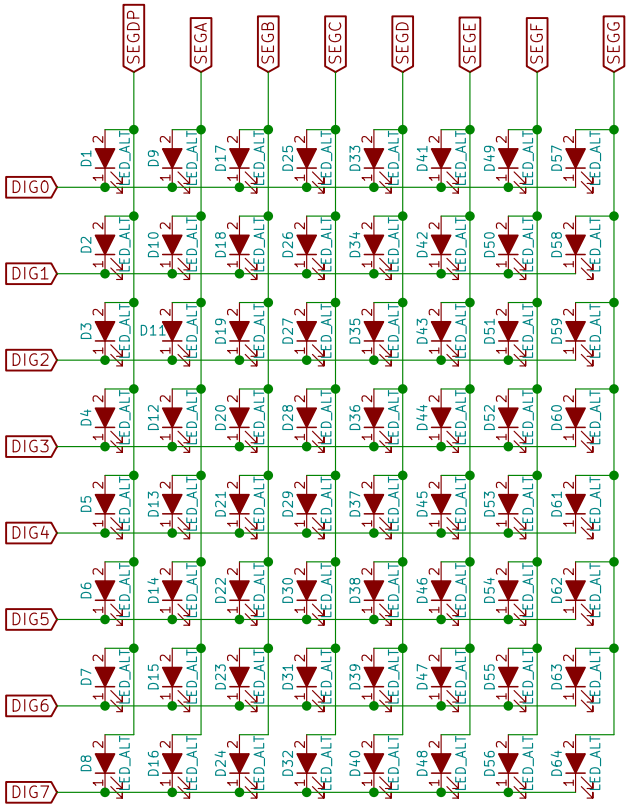

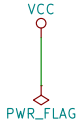

David Matias Alonso
Frizzy Electronics

Sheet: /
File: MatrixLed.sch

Title: Led Matrix 8x8

Size: A4	Date: 2017-04-17	**Rev: 1.0**
KiCad E.D.A. kicad 4.0.7-e2-637658ubuntu16.04.1		Id: 1/1