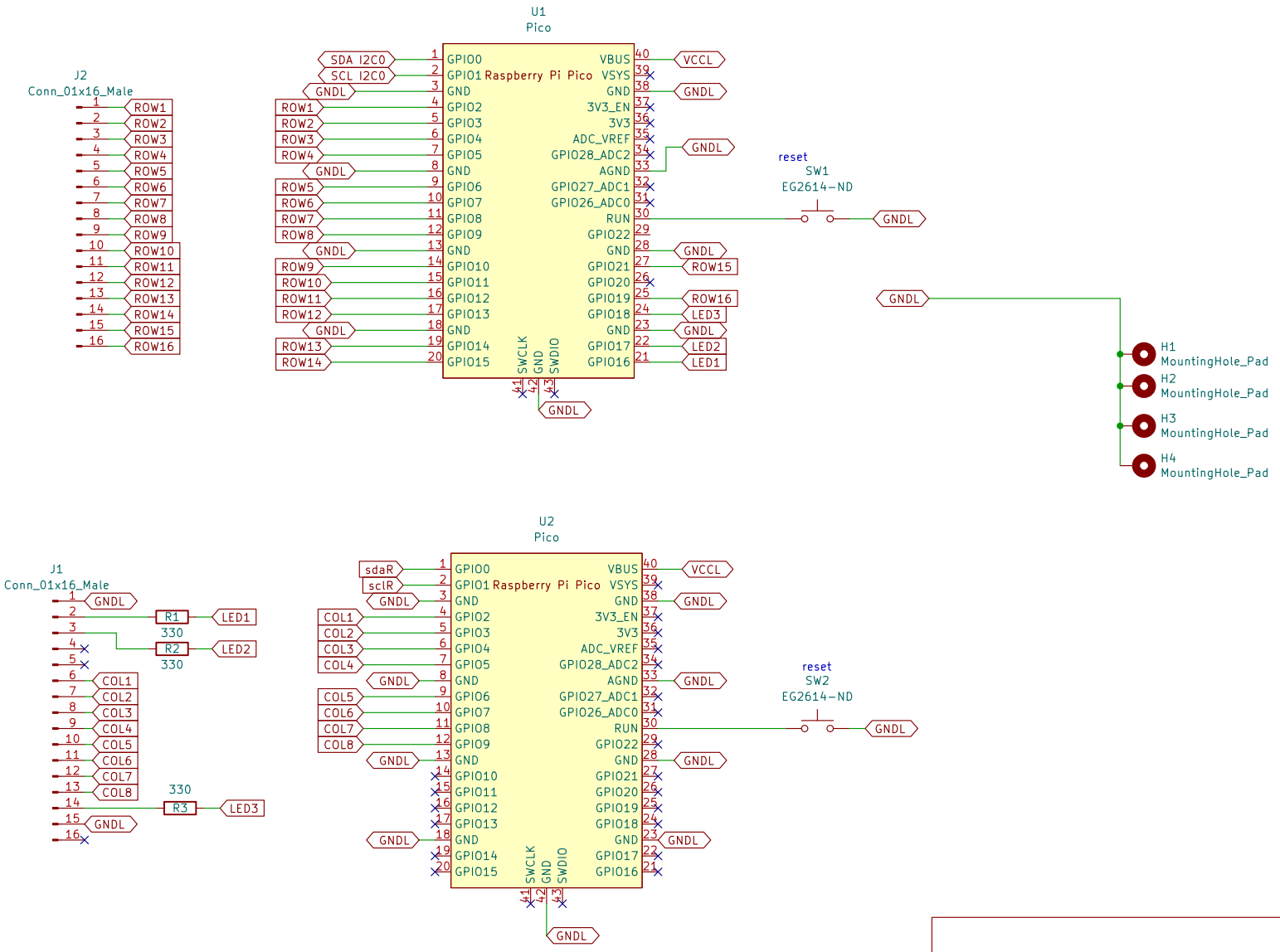

Sheet: /
File: tandberg-5000.kicad_sch

Title:

Size: A4	Date:	**Rev:**
KiCad E.D.A. kicad 6.0.10-86aedd382b-118~ubuntu22.04.1		Id: 1/1