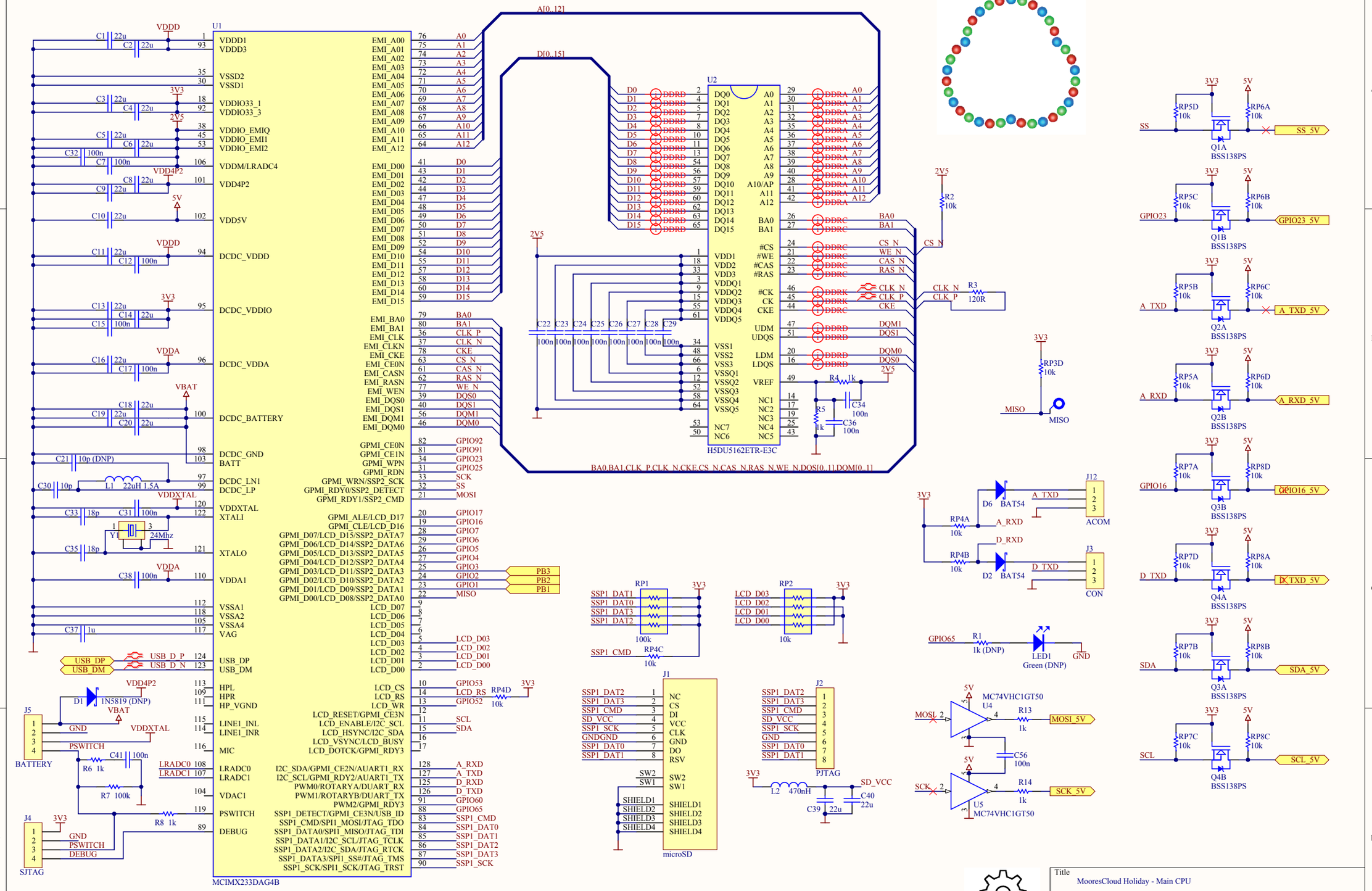


# MooresCloud Holiday

Big thanks and hugs to Olimex for their work on the CPU section via the OLinuXino Micro - http://www.olimex.com

| | | | |
|---|---|---|---|
| Title | MooresCloud Holiday - Main CPU | | |
| Size A3 | Number * | | Revision 2 |
| Date: 11/06/2013 | | Sheet 1 of 2 | |
| File: \\..\Holiday r2.SchDoc | | Drawn By: KJM | |

# MooresCloud Holiday

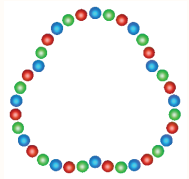

J9 EXP: 1 5V; 2 SCL_5V; 3 SDA_5V; 4; 5; 6; 7; 8

U3 ATMEGA328
- AVCC, VCC, VCC: 18, 4, 6 — 5V; C48 100n
- PC0/ADC0 23; PC1/ADC1 24; PC2/ADC2 25; PC3/ADC3 26; PC4/ADC4/SDA 27 (SDA_5V); PC5/ADC5/SCL 28 (SCL_5V); PC6/RESET 29 (RESET_N)
- PD0/RXD 30 (A_TXD_5V); PD1/TXD 31 (A_RXD_5V); PD2/INT0 32 (SS_5V); PD3/INT1 1 (D_TXD_5V); PD4/T0 2 (DOUT); PD5/T1 9 (PB1_5V); PD6/AIN0 10 (PB2_5V); PD7/AIN1 11 (PB3_5V)
- PB0 12 (GPIO23_5V); PB1/OC1A 13; PB2/SS/OC1B 14; PB3/MOSI 15 (MOSI_5V); PB4/MISO 16 (MISO_5V); PB5/SCK 17 (SCK_5V); PB6/XTAL1 7; PB7/XTAL2 8
- ADC7 22; ADC6 19; AREF 20 — C44 100n
- GND, GND, GND: 21, 3, 5
- Y2 16MHz; C42 18p; C43 18p; R12 10k

J10 ISP: 1 MISO_5V; 2 5V; 3 SCK_5V; 4 MOSI_5V; 5 RESET_N; 6

J7 USB A Female: 1 USB_D_N; 2 USB_D_P; 3; 4

J11 USBTST: 1 USB_DM; 2 USB_DP; 3; 4

L3 600R 1.5A; C45 22u; C46 100n; L4 750R 200mA

J8 JST S3B-EH: 1; 2; 3

C52 22u; C53 22u; C47 100n; C54 10p (DNP); L5 120R 3.5A; L6 750R 200mA; L7 120R 3.5A

5VIN; DOUT2; R15 0R (DNP); R9 0R; DOUT

LED2 WS2812 (DNP): DO, DI, VCC, VSS, VDD, NC; R11 100R (DNP); C55 100n (DNP)

LED3 WS2812 (DNP): DO, DI, VCC, VSS, VDD, NC; R10 100R (DNP); C49 100n (DNP)

U6 8kB EEPROM: VCC, A0, A1, A2, GND, WP, SCL, SDA; C57 100n; SCL_5V; SDA_5V

J6 DC JACK; 5VIN; L8 600R 1.5A; Z1 SMBJ TVS; C50 100uF, 10V, Tant; C51 100uF, 10V, Tant; 5V

PB1: 3V3; RP3A 10k; D3 BAT54; PB1_5V; SW1 TACTILE_SWITCH; C58 1u (DNP)

PB2: 3V3; RP3B 10k; D4 BAT54; PB2_5V; SW2 TACTILE_SWITCH; C59 1u (DNP)

PB3: 3V3; RP3C 10k; D5 BAT54; PB3_5V; SW3 TACTILE_SWITCH; C60 1u (DNP)

SDA_5V, SCL_5V, PB1_5V, PB2_5V, PB3_5V, DOUT2: Z2 GSOT05C; Z3 GSOT05C; Z4 GSOT05C

open hardware

| | | |
|---|---|---|
| Title: MooresCloud Holiday - Aux CPU & I/O | | |
| Size: A4 | Number: * | Revision: 2 |
| Date: 11/06/2013 | Sheet 2 of 2 | |
| File: \\..\Holiday Aux r2.SchDoc | Drawn By: KJM | |