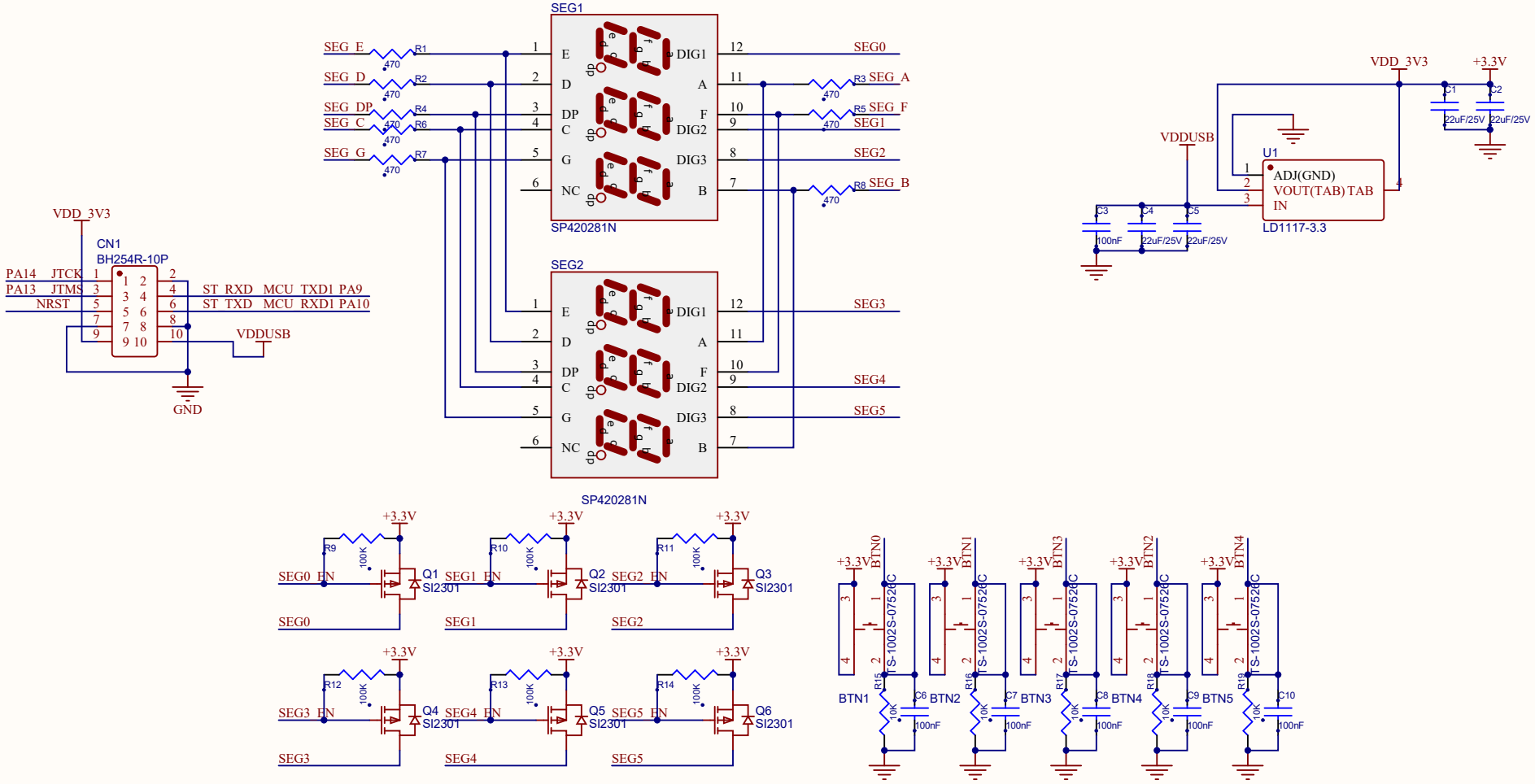


| Title | | |
|---|---|---|
| Size A4 | Number | Revision |
| Date: 2022/3/22 | | Sheet of |
| File: D:\Yuandm\..\seg7x6.SchDoc | | Drawn By: |

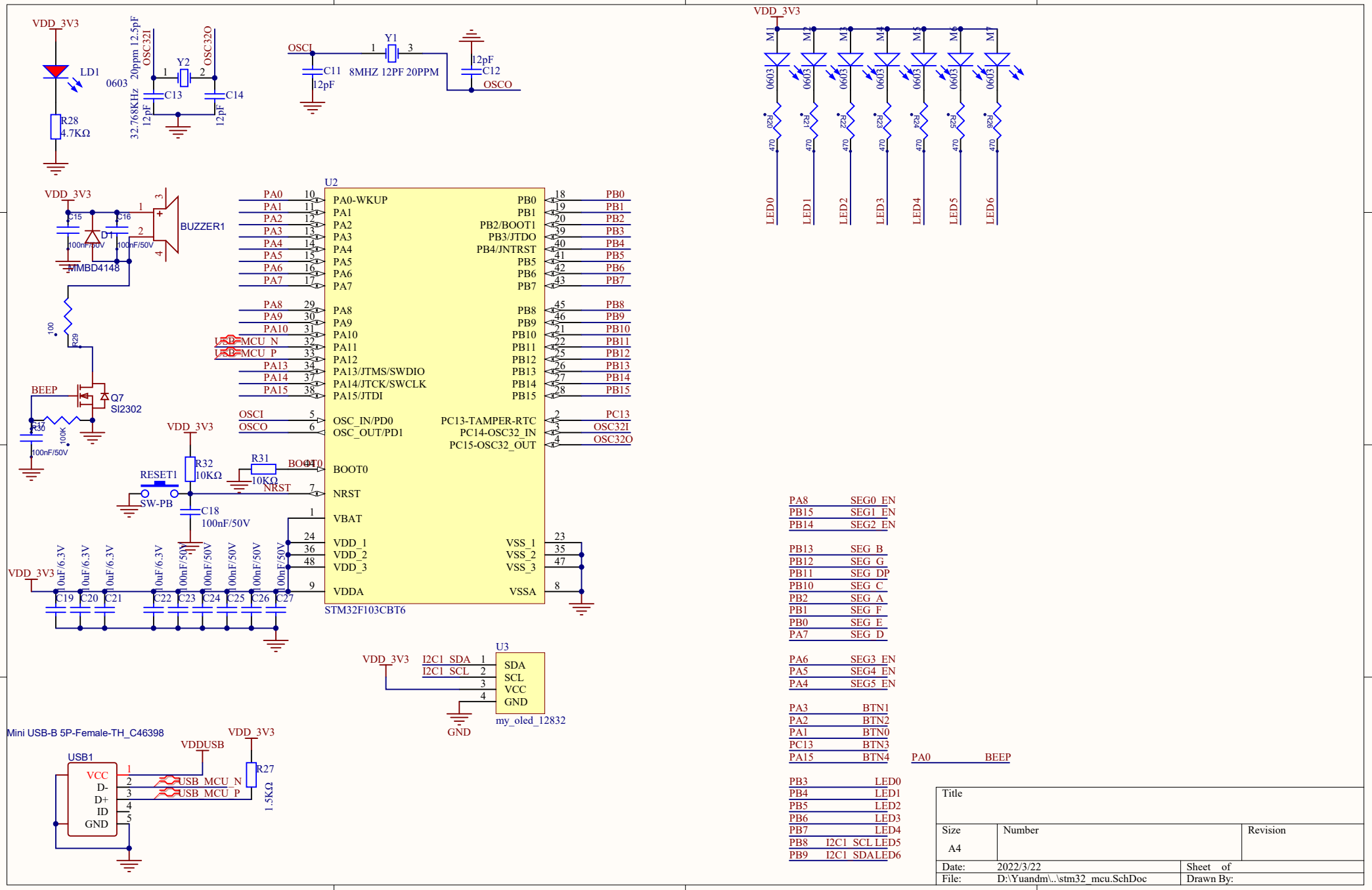
VDD_3V3
LD1
R28
4.7KΩ
0603
20ppm 12.5pF
OSC32I
OSC32O
Y2
C13
C14
32.768KHz
12pF
12pF
OSCI
Y1
8MHZ 12PF 20PPM
C11
12pF
12pF
C12
OSCO
U2
STM32F103CBT6
PA0-WKUP
PA1
PA2
PA3
PA4
PA5
PA6
PA7
PA8
PA9
PA10
PA11
PA12
PA13/JTMS/SWDIO
PA14/JTCK/SWCLK
PA15/JTDI
OSC_IN/PD0
OSC_OUT/PD1
BOOT0
NRST
VBAT
VDD_1
VDD_2
VDD_3
VDDA
PB0
PB1
PB2/BOOT1
PB3/JTDO
PB4/JNTRST
PB5
PB6
PB7
PB8
PB9
PB10
PB11
PB12
PB13
PB14
PB15
PC13-TAMPER-RTC
PC14-OSC32_IN
PC15-OSC32_OUT
VSS_1
VSS_2
VSS_3
VSSA
USB_MCU_N
USB_MCU_P
BUZZER1
D1
MMBD4148
C15
C16
100nF/50V
100nF/50V
R29
100
BEEP
Q7
SI2302
R30
100K
100nF/50V
R32
10KΩ
R31
10KΩ
RESET1
SW-PB
C18
100nF/50V
0uF/6.3V
100nF/50V
C19
C20
C21
C22
C23
C24
C25
C26
C27
U3
SDA
SCL
VCC
GND
I2C1_SDA
I2C1_SCL
my_oled_12832
Mini USB-B 5P-Female-TH_C46398
USB1
VCC
D-
D+
ID
GND
VDDUSB
R27
1.5KΩ
M1
M2
M3
M4
M5
M6
M7
R20
R21
R22
R23
R24
R25
R26
470
LED0
LED1
LED2
LED3
LED4
LED5
LED6
PA8 SEG0_EN
PB15 SEG1_EN
PB14 SEG2_EN
PB13 SEG_B
PB12 SEG_G
PB11 SEG_DP
PB10 SEG_C
PB2 SEG_A
PB1 SEG_F
PB0 SEG_E
PA7 SEG_D
PA6 SEG3_EN
PA5 SEG4_EN
PA4 SEG5_EN
PA3 BTN1
PA2 BTN2
PA1 BTN0
PC13 BTN3
PA15 BTN4
PA0 BEEP
PB3 LED0
PB4 LED1
PB5 LED2
PB6 LED3
PB7 LED4
PB8 I2C1_SCL LED5
PB9 I2C1_SDA LED6
Title
Size
A4
Number
Revision
Date: 2022/3/22
Sheet of
File: D:\Yuandm\..\stm32_mcu.SchDoc
Drawn By:

PWR
BEEP
LD0
LD1
LD2
LD3
LD4
LD5
LD6
LD7
PA8
PB15
PB14
PA6
PA5
PB5
PB6
PB7
PA3
PA2
PB2
PB1
PB0
EN0
EN2
EN3
EN1
EN4
EN5
PB10
PB11
PB12
PB13
PB14
PA7
PA9
PA10
TX1
RX1
BEEP
A
B
C
D
E
F
G
P
0
1
2
3
4
5
6
7
8