BUTTON / LED

POWER BUTTON

POWER LED

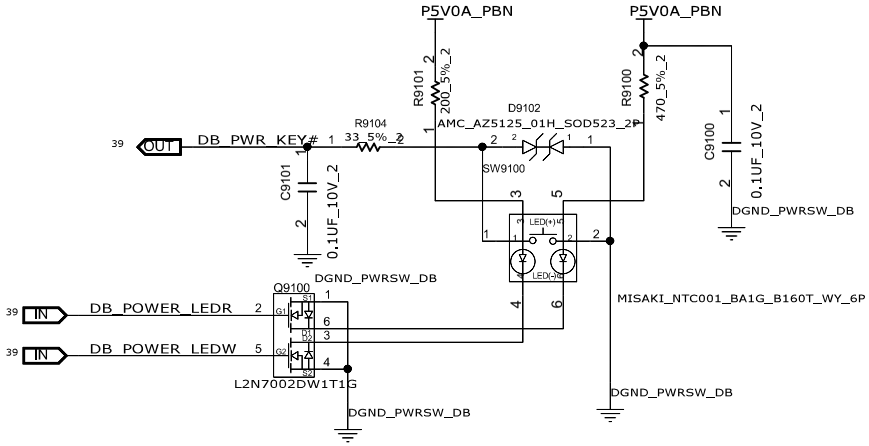

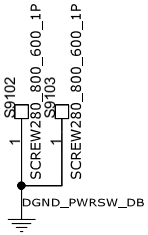

R110, R111
5V: 330 OHM
3.3V: 150 OHM
R109, R112
5V: 150 OHM
3.3V: 18 OHM

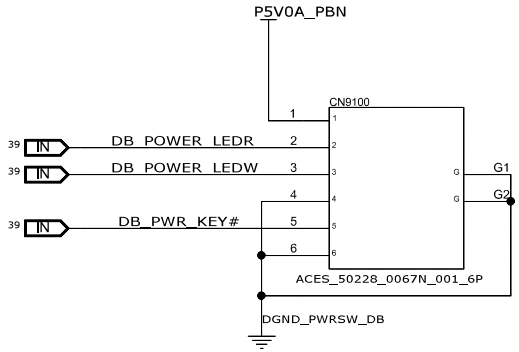

FIX MASK

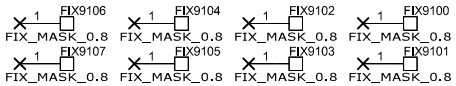

CHANGE by	XXX	DATE	21-OCT-2002
PCB P/N	60xxxxxxxxxx	PCB VER	XXX

INVENTEC

TITLE
MODEL,PROJECT,FUNCTION
Block Diagram

SIZE	CODE	DOC.NUMBER	REV
A3	CS	1310xxxxx-0-0	X01

SHEET 39 of 41