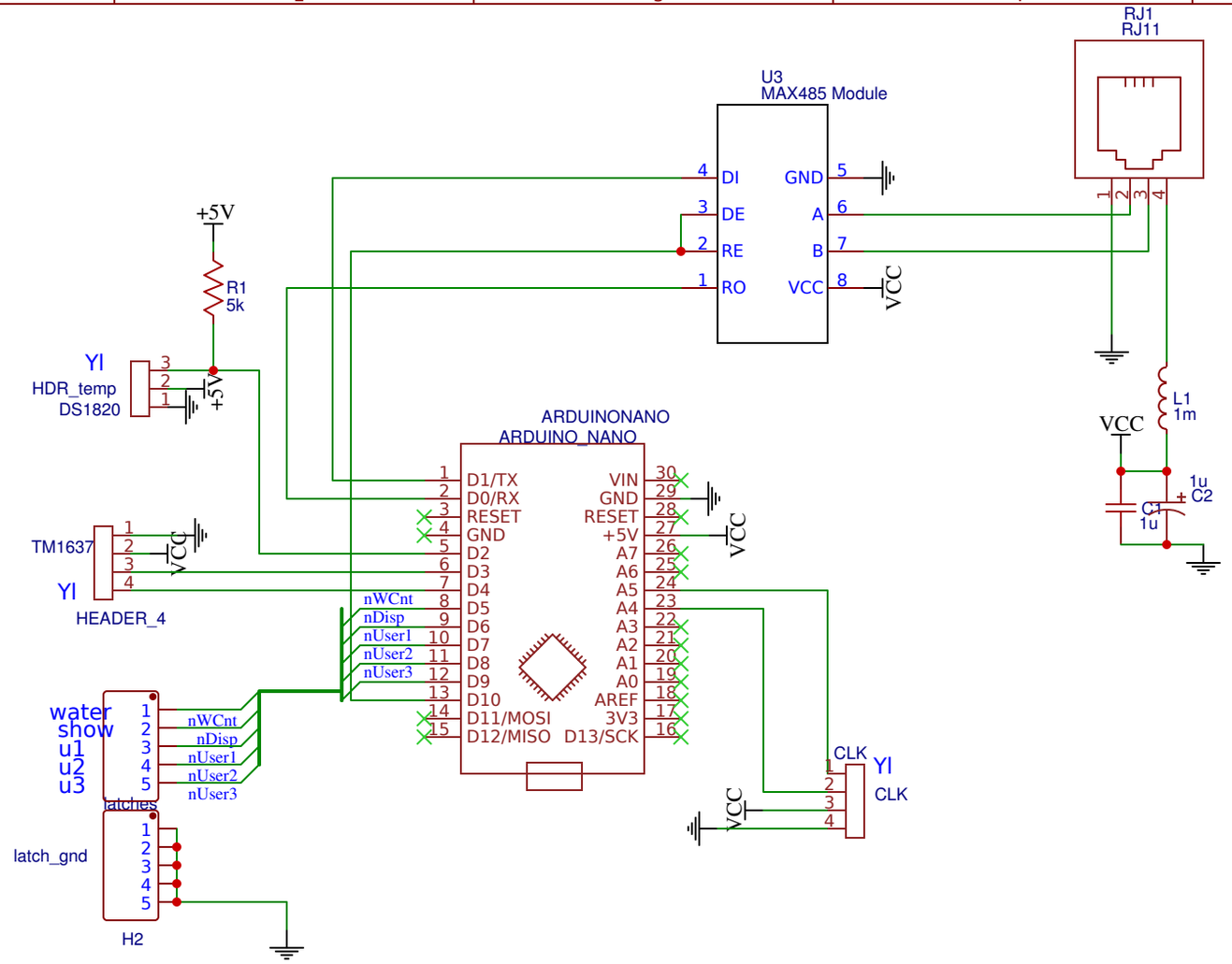

TITLE: схема регистратора для счетчика воды
https://github.com/Frozzen/ArduinoSensors/tree/ArduWater

REV: 1.0

Company: Your Company

Sheet: 1/1

Date: 2019-02-04

Drawn By: UserSupport

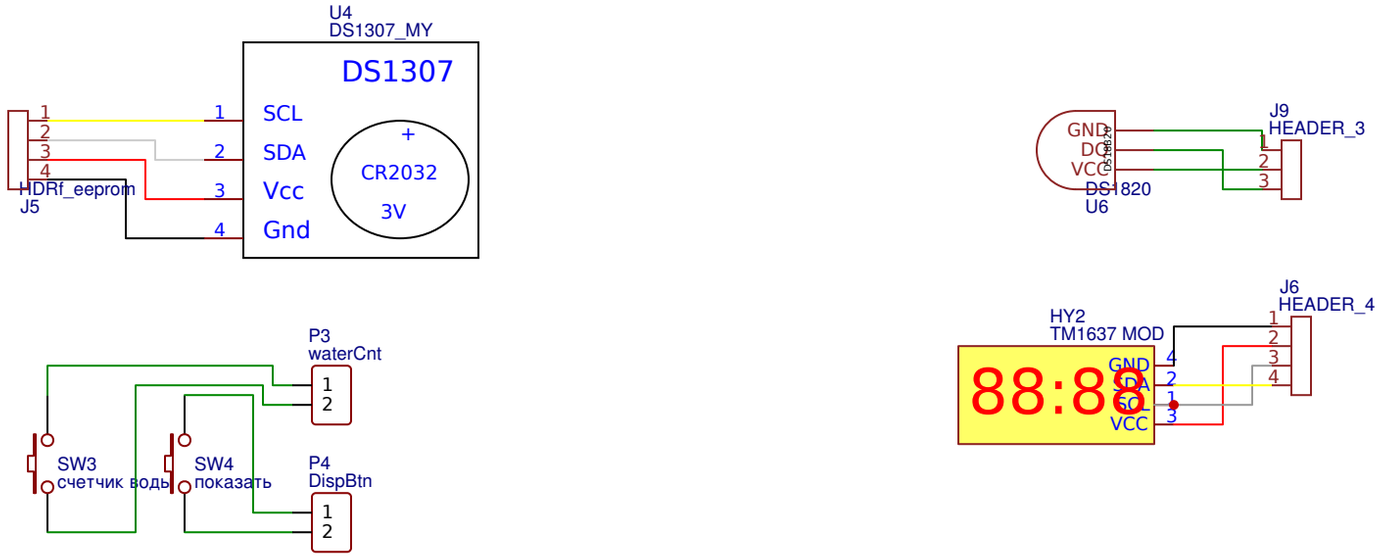

TITLE: Внешние модули		REV: 1.0
EasyEDA	Company: Your Company	Sheet: 1/1
	Date: 2019-02-05 Drawn By: Frozzen	