IOWA STATE UNIVERSITY

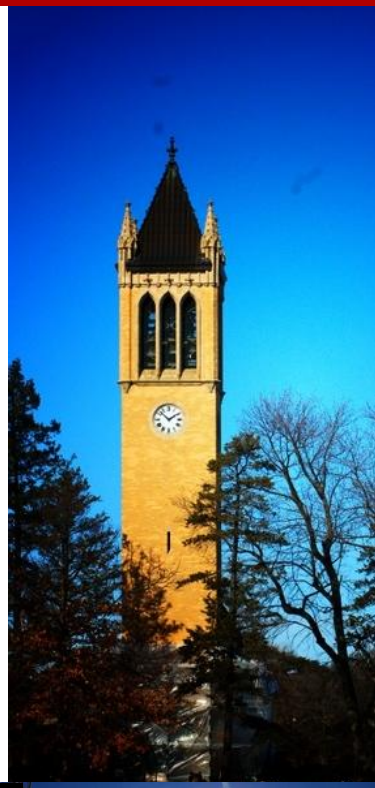

AER E 4620

Week 3: Design Test Objective (DTO) Unit

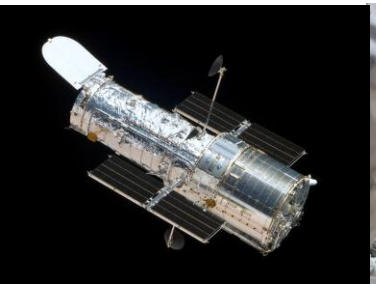

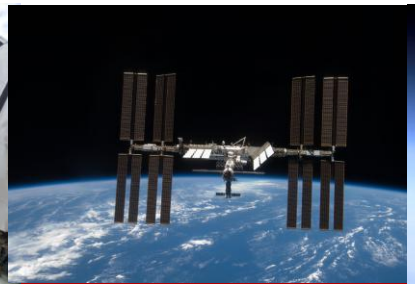

Summary

- Electronics Meeting in pool room today during lab time (12:05)
  - Don't want to restrict anyone from attending, but
  - Preference is to limit to 2 people per team who will be focused on electronics part of the project.

- This lecture will cover DTO Units
  - Not the "flight unit" which you worked on last semester.

Design Test Objective (DTO) Unit

- You will be developing and performing a DTO of your GOAT Drone
- Focus will be on Proof of Concept and controls capability
  - Drone will need to be able to “fly” around the pool showing full 6 DOF
  - Additionally, your drone needs to be able to rndv and dock with your docking port
  - Will be flying in “first person” view (via a single mounted camera)
    - *Pool cameras will also be available to provide additional views*
- You will be required to control your DTO Unit/Demonstrator, in a similar fashion as you would your Flight Unit.
  - … what does that mean?

Design Test Objective (DTO) Unit

- You will be required to control your DTO Unit/Demonstrator, in a similar fashion as you would your Flight Unit: What does this mean?

- Translation:
  - Required to use similar design
    - One thruster in each direction – then that's all you get
    - Max limit of 24 thrusters

- Attitude control:
  - If your design uses Propulsion – same requirements as translational controls
  - For Non-propulsive attitude control (Reaction wheels, CMGs, Momentum wheels)
    - **Setup a time to talk with me**

- Same DTO relative shape to flight unit structure

- Size: Small'ish is better for control
  - Longest dimension should be no more than ~2-2.5 feet

  - May need to consider making it a little bigger than actual flight unit if flight design is small
    - Concern with being able to physically mount "thrusters"
    - If flight unit would be around 1 ft or less

Design Test Objective (DTO) Unit

- Each team will have a max budget of $150
- You will be using ½” PVC for the main frame
  - Remember they need to be waterproof
  - Lower mass is better due to thruster limitations
    - Brass solenoids will make it heavy anyways…
- Best designs will be kept for display
- You will need to attach foam (maybe weights) to balance out your design’s cg in the water.

Most Basic Level

- I will provide you with most common equipment, electronics, etc.
- You will purchase and build your design's unique parts
- Control will be from computer through Raspberry Pi
- Signal from Pi will be sent to power switches which will be mounted on a PCB, on a rack poolside.
- Signal from the power switches will be sent to solenoid valves (thrusters) via cables into the water
- Propulsion will be via air hose from building high pressure source
- The air will be distributed to each thruster using splitters and hoses

Equipment & Funding

- I will provide you with (only the big-ticket items are listed below):
  - One Raspberry Pi5 in a protective box (w/ fan)
  - Ribbon cable to connect from Pi to PCB
  - Micro-SD card for Pi
  - Brass solenoid valves - “Thrusters” w/ nozzles
  - PVC pipe (1/2” diameter)
  - Air Tubing
  - Air Tubing splitters (most)… may need to order more
  - Camera (only 1 for docking)
    - Additional pool cameras are available

- Available to you:
  - “Some assembly required” harnesses
  - Tools (pool room tool cabinets, woodshop, soldering stations, etc.)

- You may have to purchase additional hardware/equipment needed for your specific design (Budget of $150)

Raspberry Pi 5

Shared PCB

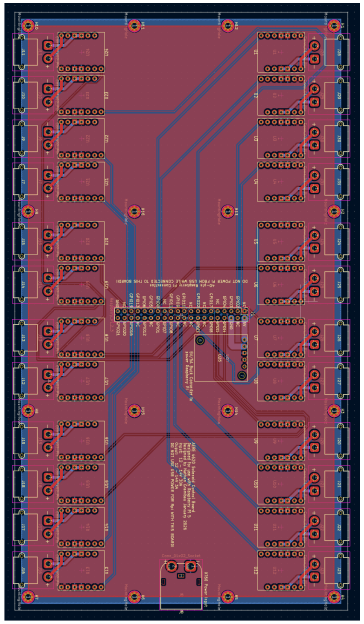

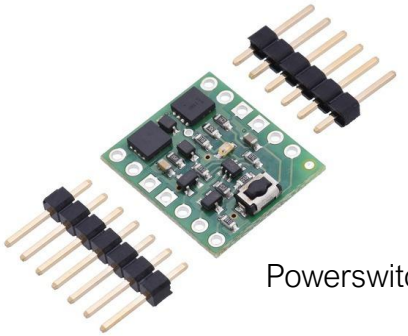

Powerswitch

Raspberry Pi
Protective and Cooling
Case

Docking
Camera

Brass Solenoid
Valve
(Thrusters)

Pi Setup for Programming

Raspberry Pi in protective box

Cable for connection to monitor
(Now a gray direct cable)

Keyboard for programming

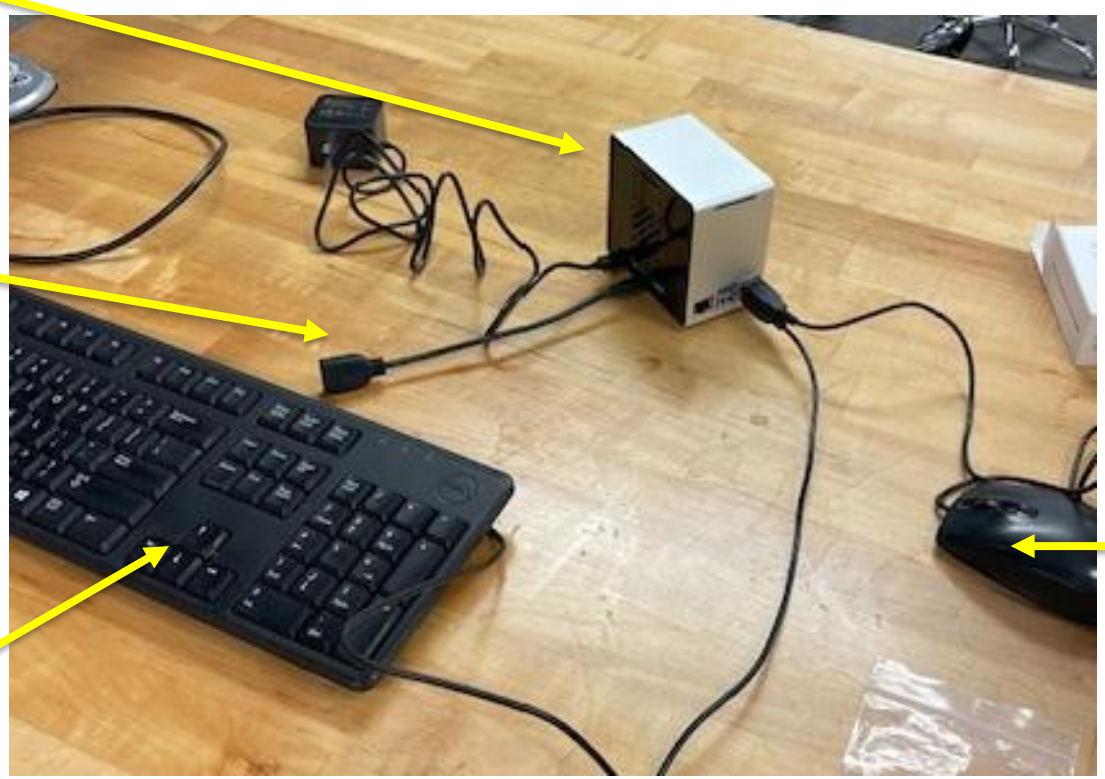

Mouse

Generic Information

- Most electronics will be kept out of the water
  - Power/Common Ground wires will be sent down to your DTO units along with an air hose
  - Example setup on next slide
    - Up to 6 power cables, one air hose, and one camera cable in the water
- Each power cable contains 8 wires
  - 4 power/ground pairs
    - Up to 6 cables (each 4 thrusters), hence max of 24 thrusters
- Air hose will be providing air pressure to feed each craft
  - Around 100 psi
  - You will split that singular source at your craft
- Single docking camera provided for each team
  - Mount on fwd/docking face
  - Cable routes out of water

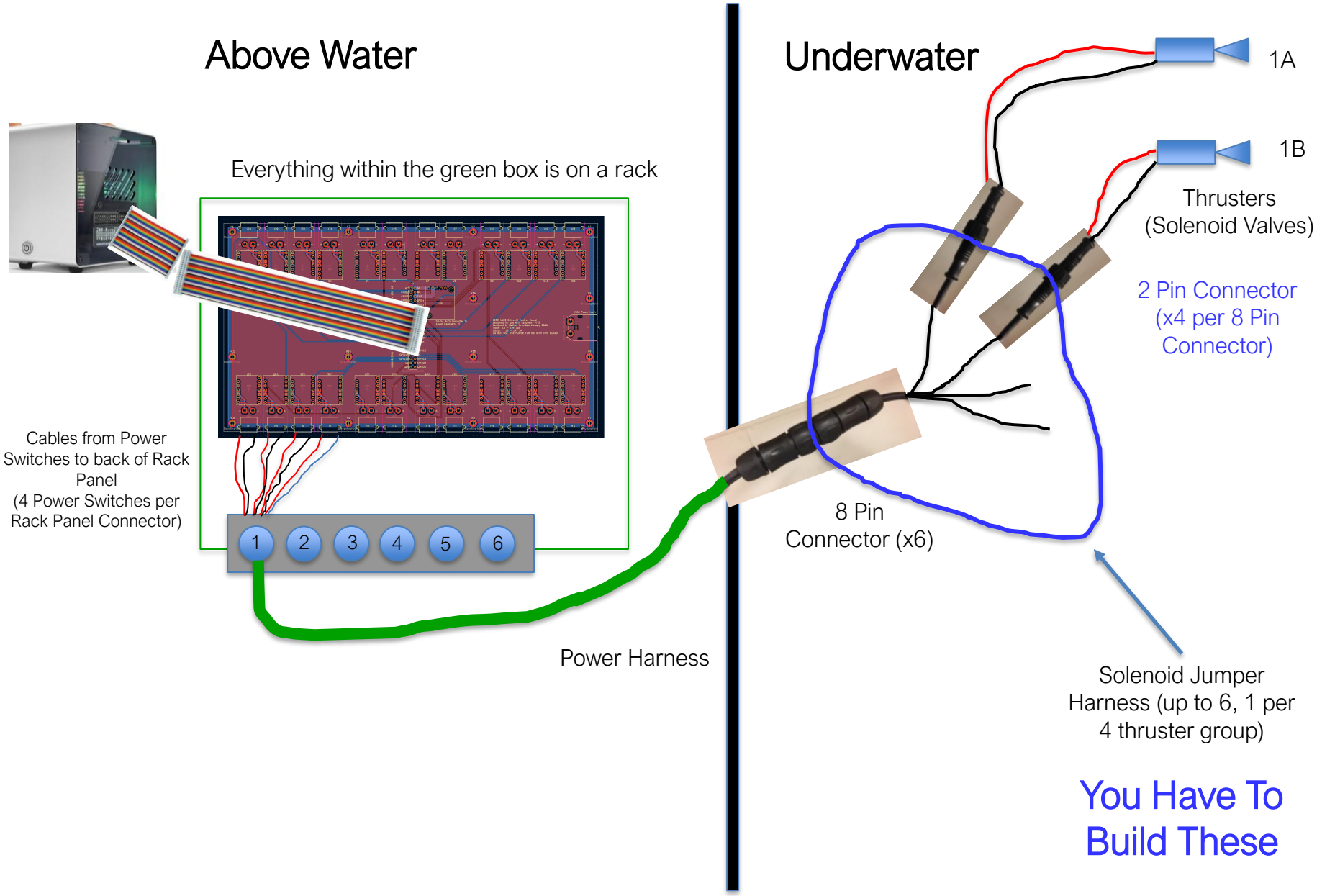
Above Water
Underwater
Everything within the green box is on a rack
Cables from Power Switches to back of Rack Panel (4 Power Switches per Rack Panel Connector)
1
2
3
4
5
6
Power Harness
8 Pin Connector (x6)
1A
1B
Thrusters (Solenoid Valves)
2 Pin Connector (x4 per 8 Pin Connector)
Solenoid Jumper Harness (up to 6, 1 per 4 thruster group)
You Have To Build These

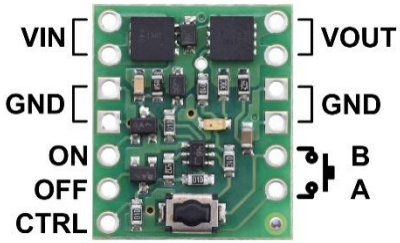

Power Switch

Provides Power via VIN/VOUT (Open/Close) to solenoid via signal thru CTRL from Raspberry Pi

PCB

Routes power/data from Pi to each power switch to control each thruster/solenoid

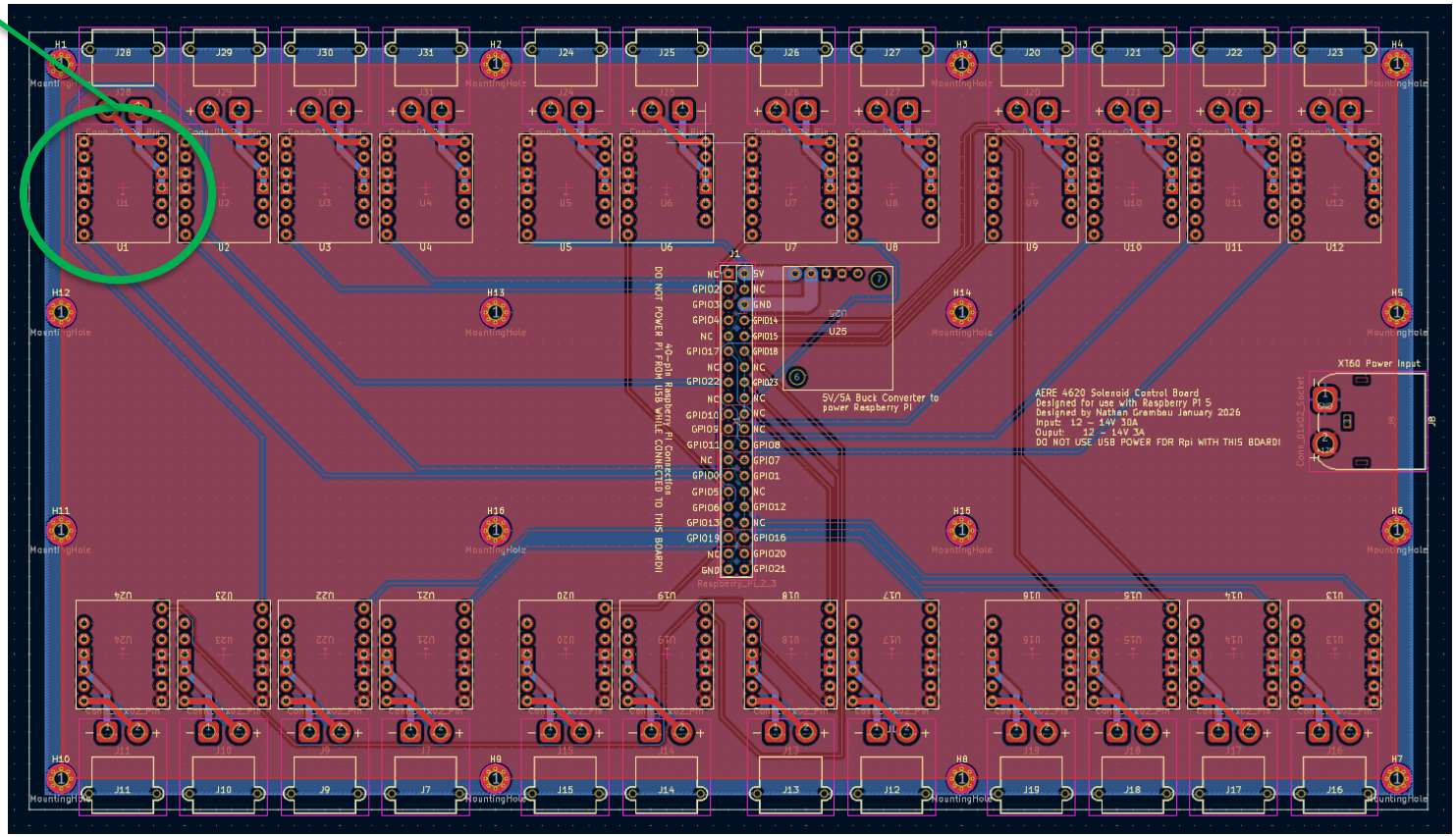

Power Switch

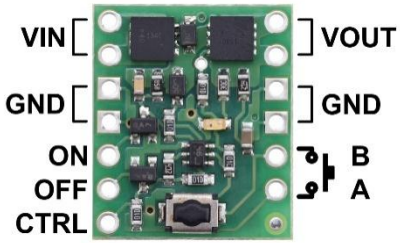

PCB

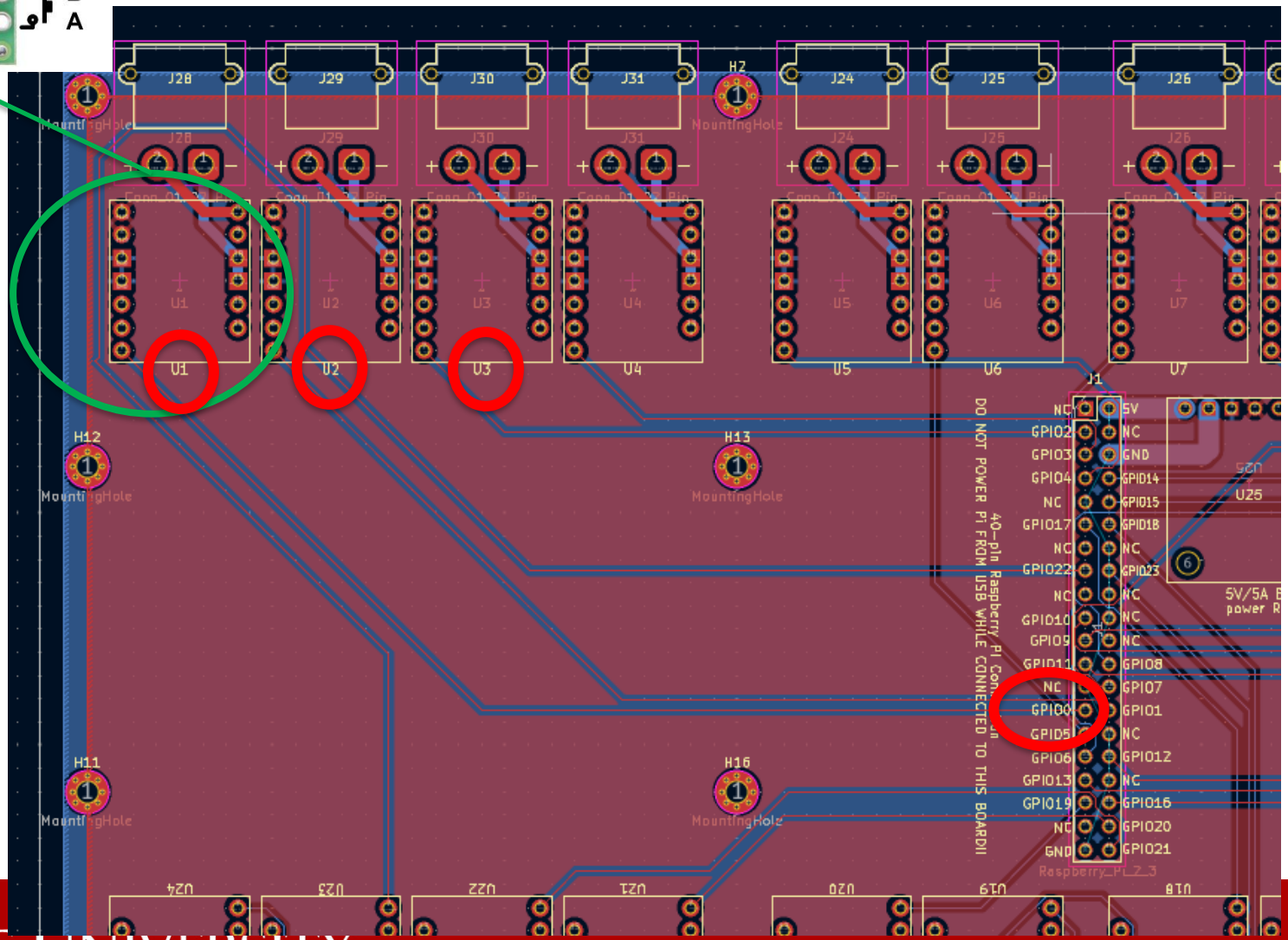

PCB Configuration / Thruster Tracking Table

Raspberry Pi/GPIO	Pololu Power Switch	Rack Connector	8-Pin Cable Power / Grnd	8-Pin Cable Wire Color Power/Grnd	2-Pin Connector Wire Color Power / Grnd	Thruster (example nomenclature only)
GPIO0	U1	1	A / B	Red / Blue	Red / Black	1A
GPIO1	U2		C / D	Yellow / Green	Red / Black	1B
GPIO2	U3		E / F	Pink / Gray	Red / Black	1C
GPIO3	U4		G / H	White / Brown	Red / Black	1D
GPIO4	U5	2	A / B	Red / Blue	Red / Black	2A
GPIO5	U6		C / D	Yellow / Green	Red / Black	2B
…	…	…	…	…	…	
GPIO18		5	E / F	Pink / Gray	Red / Black	5C
GPIO19			G / H	White / Brown	Red / Black	5D
GPIO20		6	A / B	Red / Blue	Red / Black	6A
GPIO21			C / D	Yellow / Green	Red / Black	6B
GPIO22			E / F	Pink / Gray	Red / Black	6C
GPIO23			G / H	White / Brown	Red / Black	6D

Notes
Example thruster naming convention

You will need to keep track of which Pi GPIO controls which Power Switch and ultimately which Thruster, and what the resultant motion will be.

Propulsion System Tracking Table

Translation	Thrusters
Fwd (+X)	1A, 1B, 1C, 1D
Back (-X)	2A, 2B, 2C, 2D
Left (+Y)	Etc.
Right (-Y)	
Up (+Z)	
Down (-Z)	

Rotation	Thrusters
+ Pitch	3C, 3D, 5A, 5B
- Pitch	
Etc.	

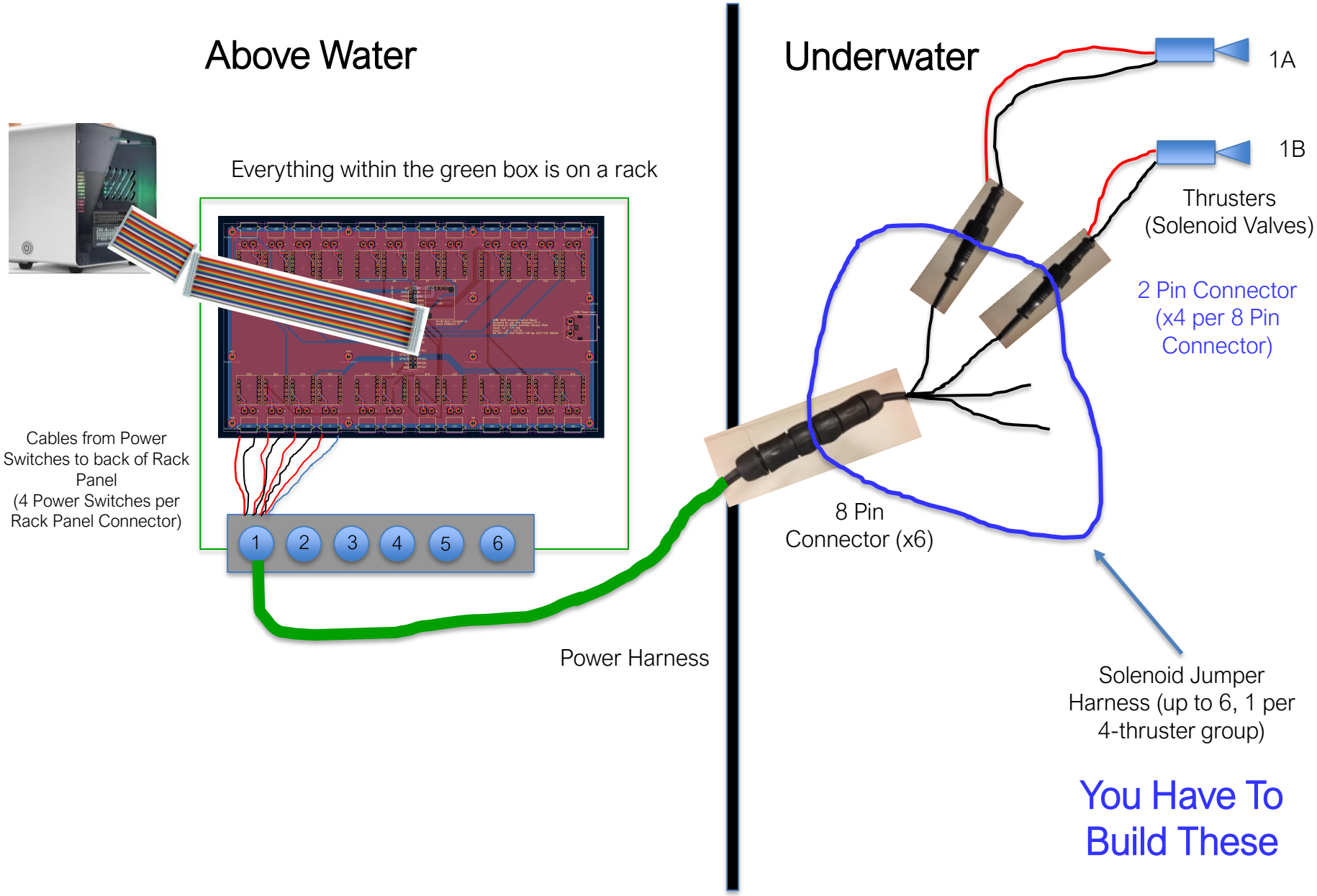
Above Water
Underwater
Everything within the green box is on a rack
Cables from Power Switches to back of Rack Panel
(4 Power Switches per Rack Panel Connector)
1
2
3
4
5
6
Power Harness
8 Pin Connector (x6)
1A
1B
Thrusters (Solenoid Valves)
2 Pin Connector (x4 per 8 Pin Connector)
Solenoid Jumper Harness (up to 6, 1 per 4-thruster group)
You Have To Build These

CAD & Schematics

- Power Schematic
- Airflow Schematic
- CAD model
  - Including comparison with flight unit
- Full Build of Materials (BOM) list

DTO UNIT POWER SCHEMATIC

Electrical Schematic Example

VISIO thru ISU My Apps

(from prior semester – details are different for this semester)

Note: Missing GPIO Pin References

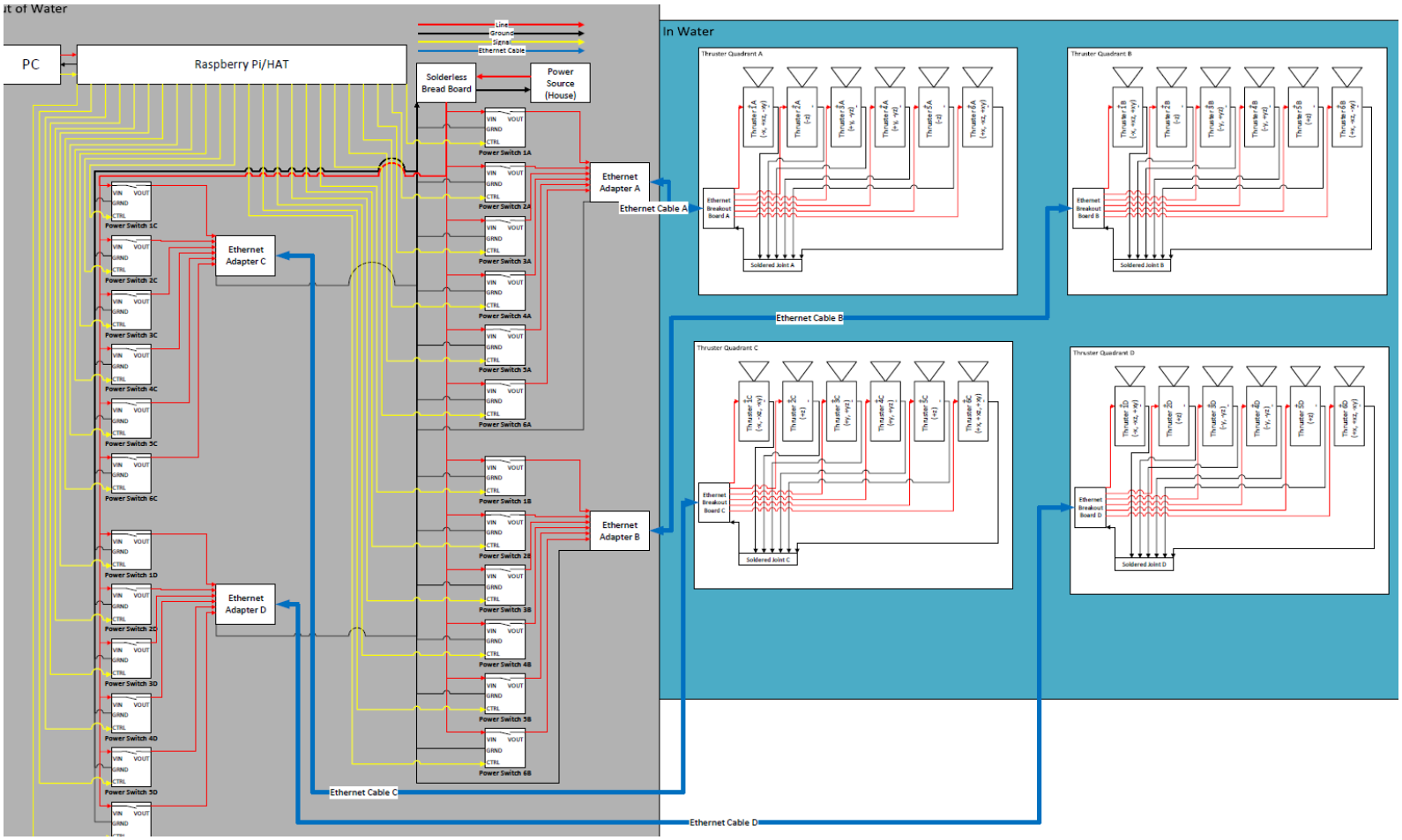

Note: You should then also include a zoomed in detailed view of the subsections

Note: Incorrect GPIO Pin References

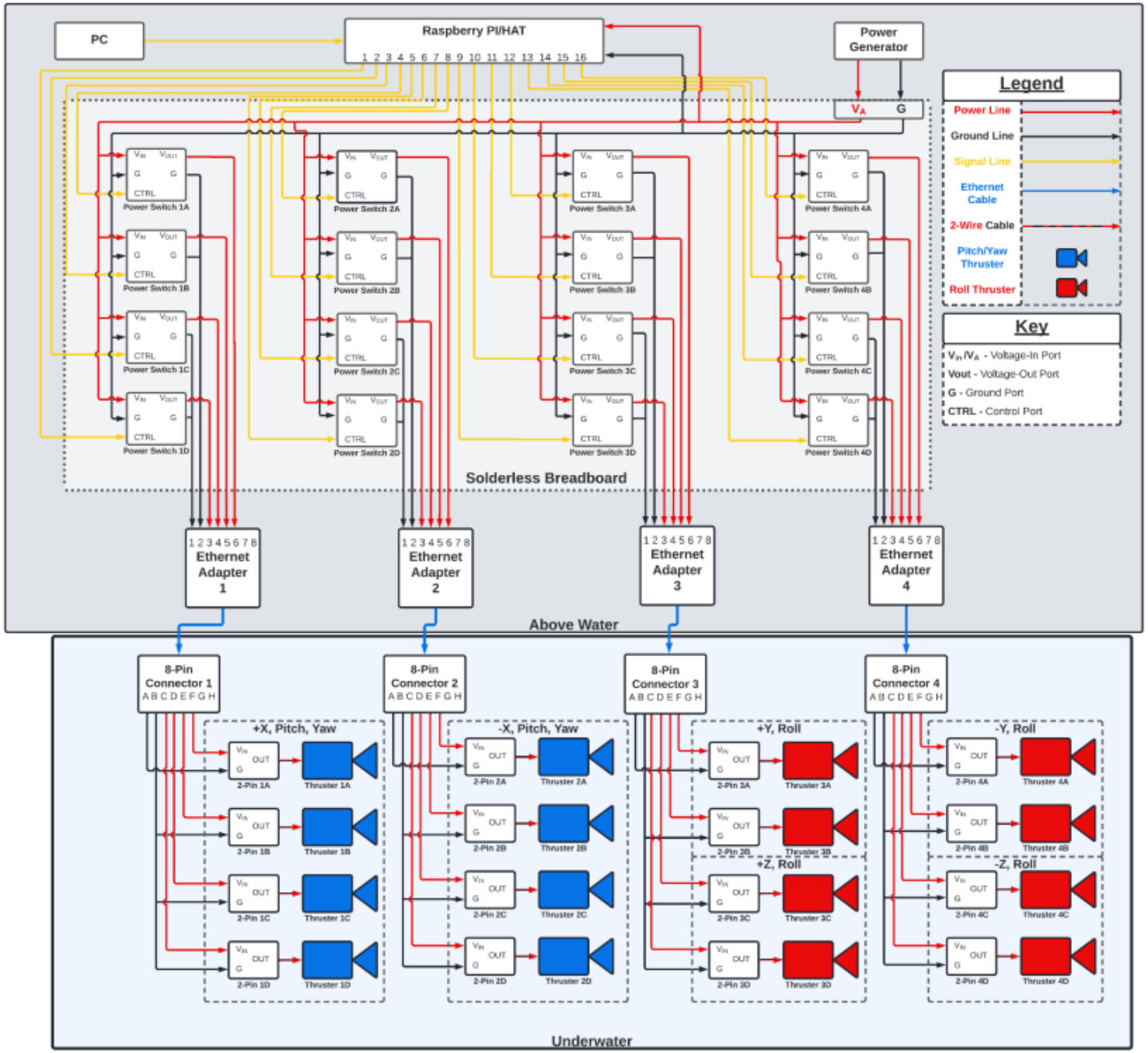

Note: Obviously can't read but gives highest level view.
Next slides then "zoom" in to give details.

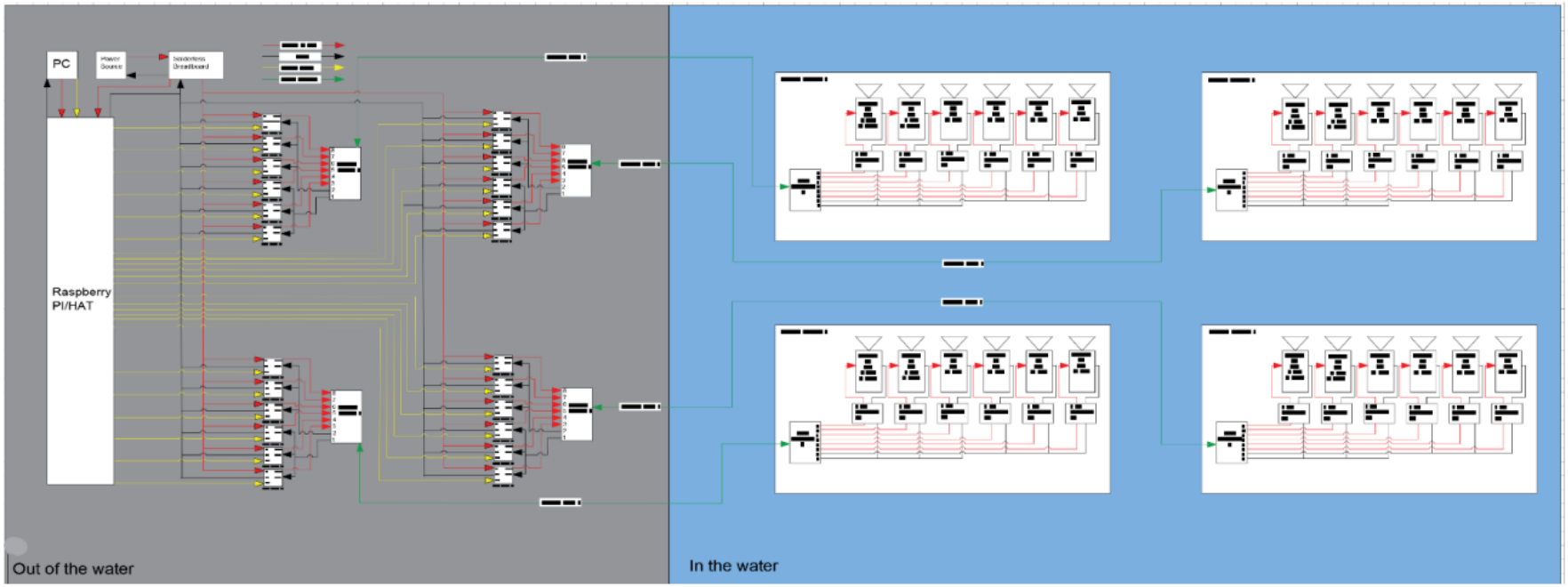

Figure 1: Overall schematic of controller/power source-to-thrusters

Note: Missing GPIO Pin References

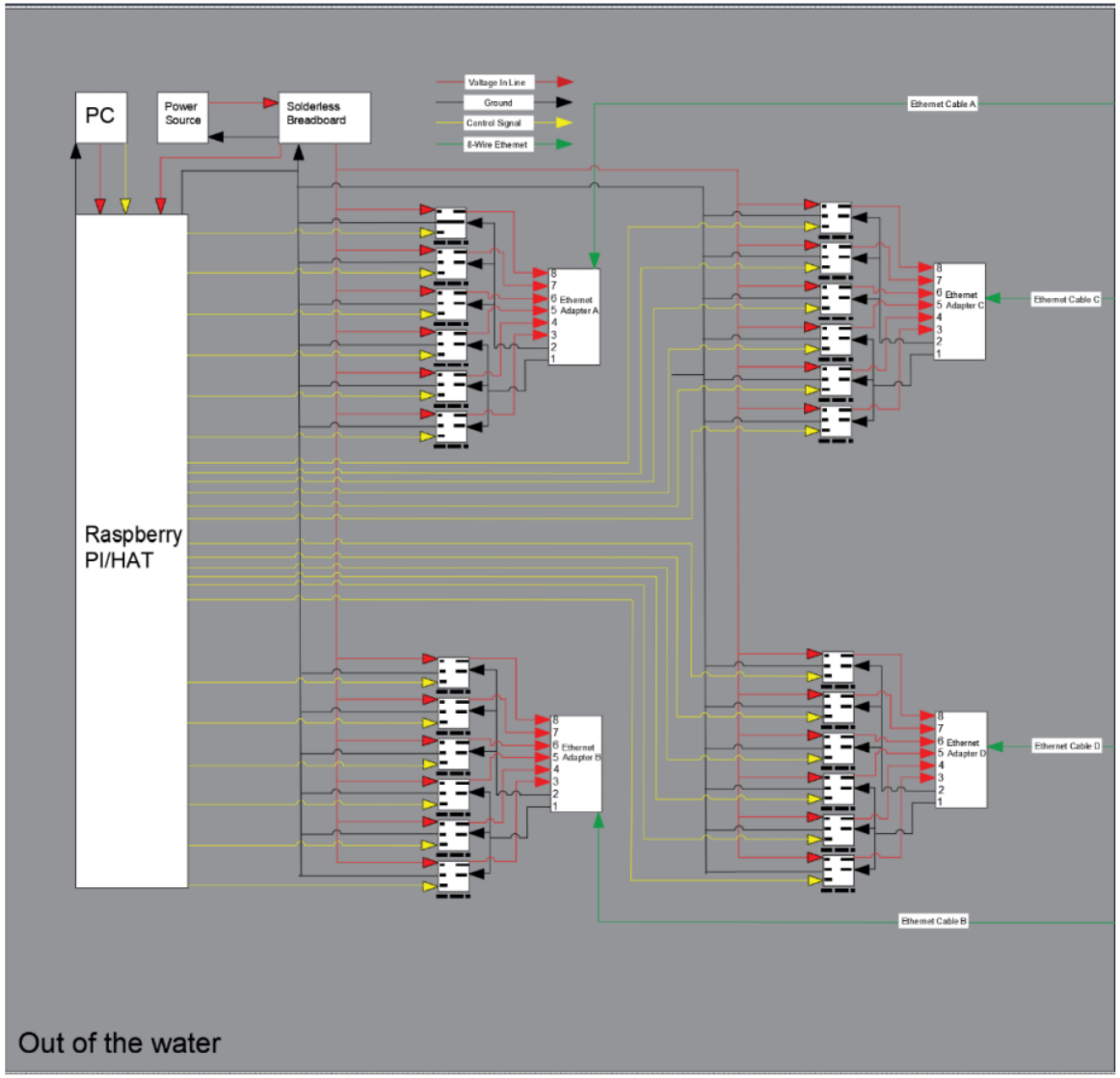

Figure 2: Schematic of electronics out of water

Note: Zoomed in detailed view of one section on next slide.

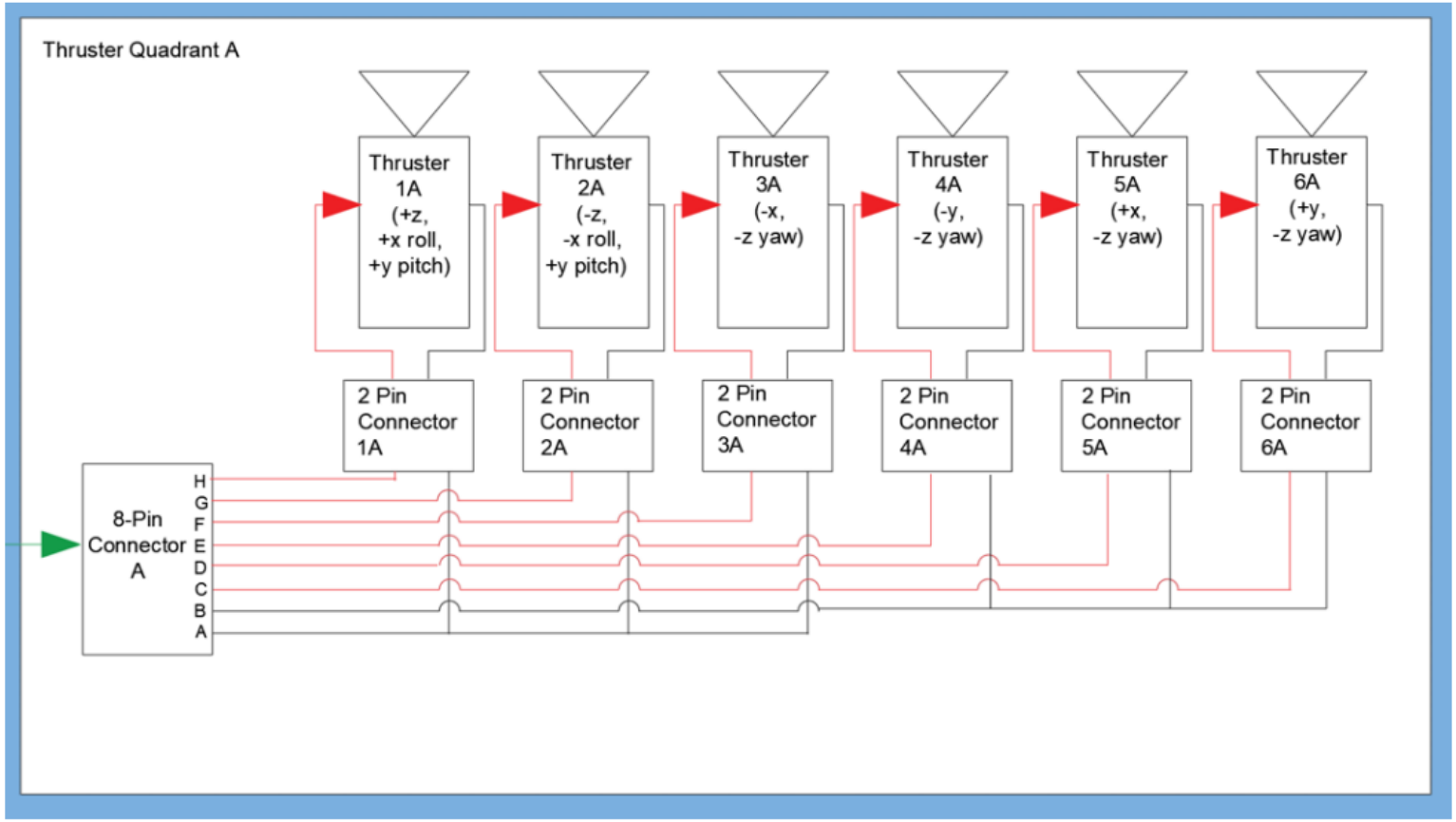

Figure 4: Schematic of thruster quadrant A.

<u>Note:</u> Prior classes used different cables and hence the red/black example above will be incorrect for this semester

DTO UNIT AIR FLOW SCHEMATIC

“Thrust” Distribution

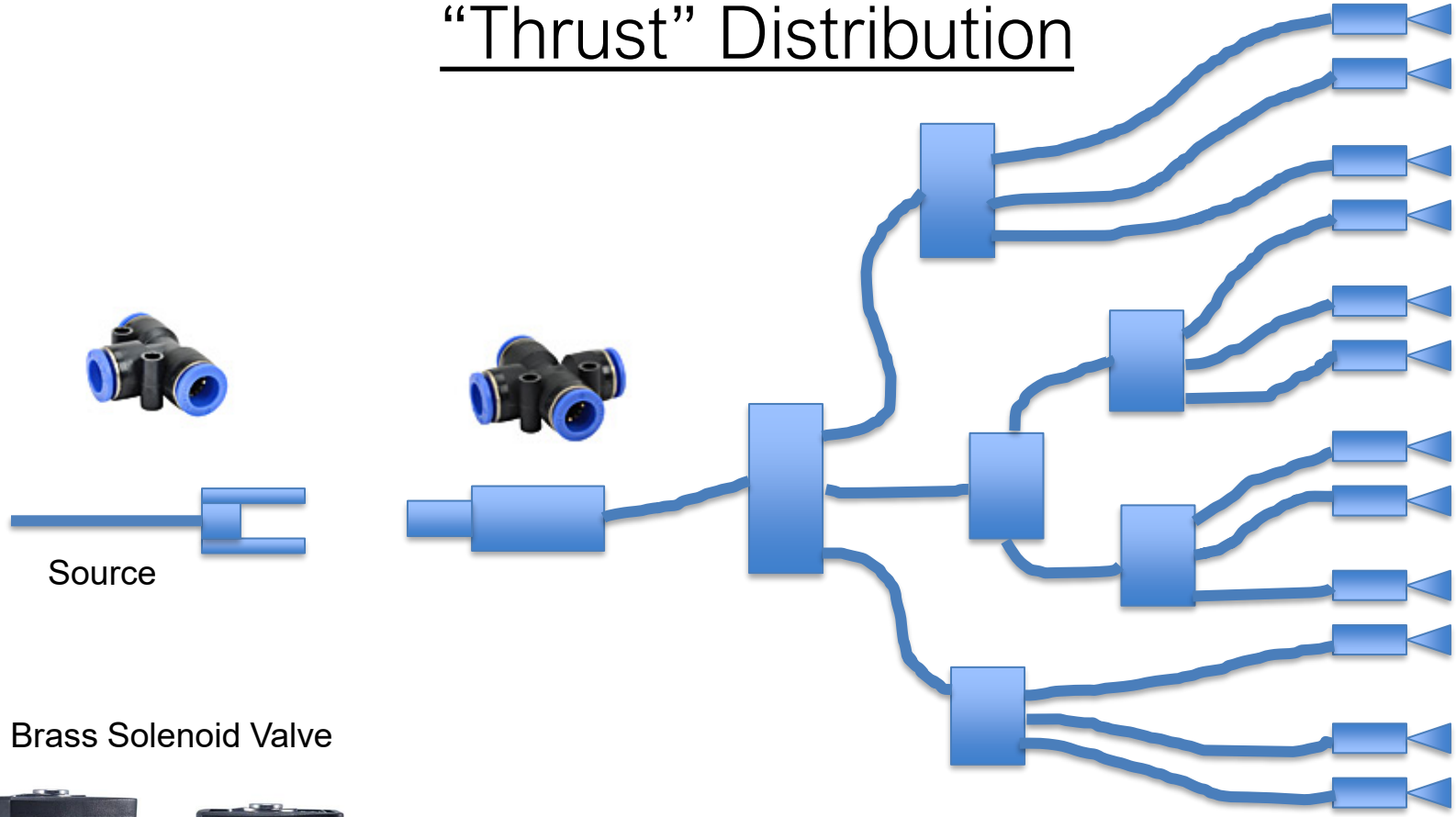

Brass Solenoid Valve

NOTE

- I have some 2-way and 3-way hose splitters as well as some 90 deg connections available.
- We will work together to see what I have and what you need before your order is placed.

Airflow Schematic Example
(example from prior semester)

Airflow Diagram:

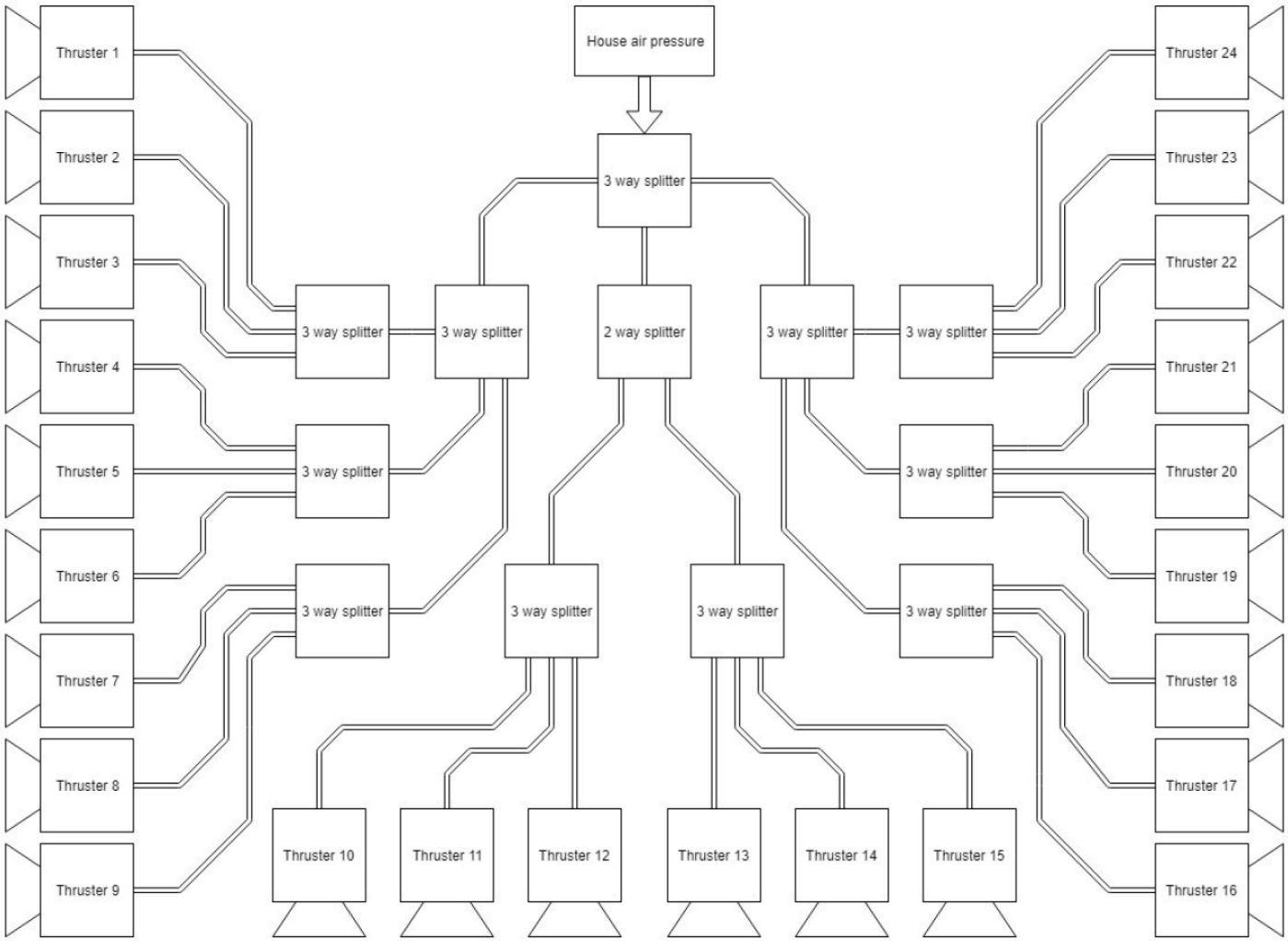

Note: Need to include table showing
(1) which Pi GPIO/Power Switch routes to which thruster, and
(2) which thruster combination/s are used for translation and rotation.

DTO UNIT CAD MODEL

CAD Model

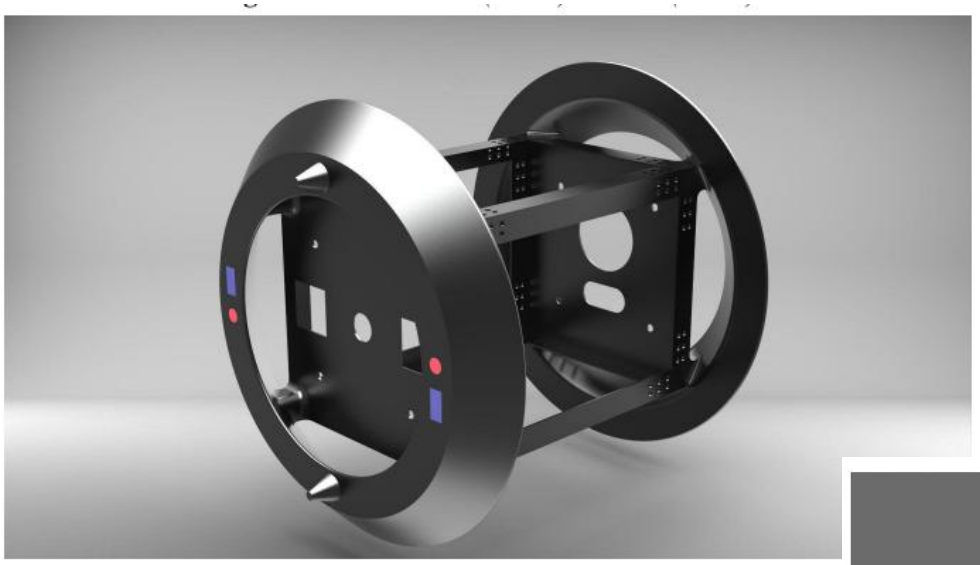

Note:
PVC DTO Unit must be physically representative of your flight unit shape/design

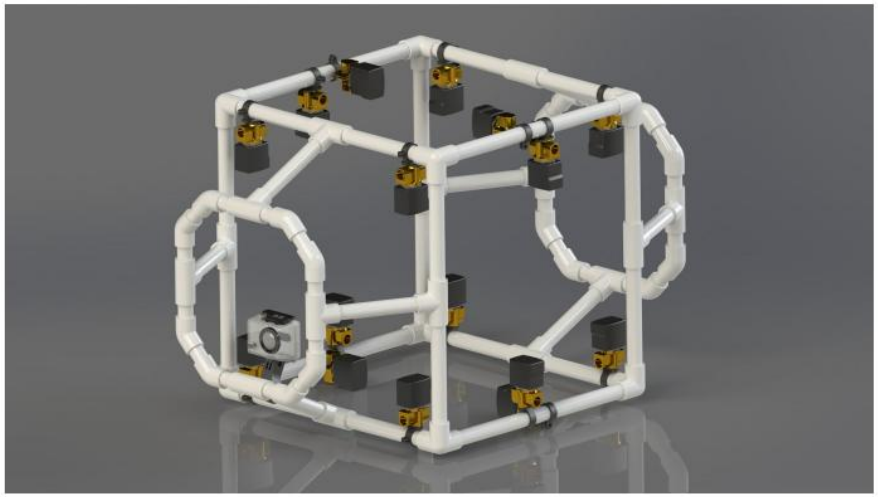

CAD Model

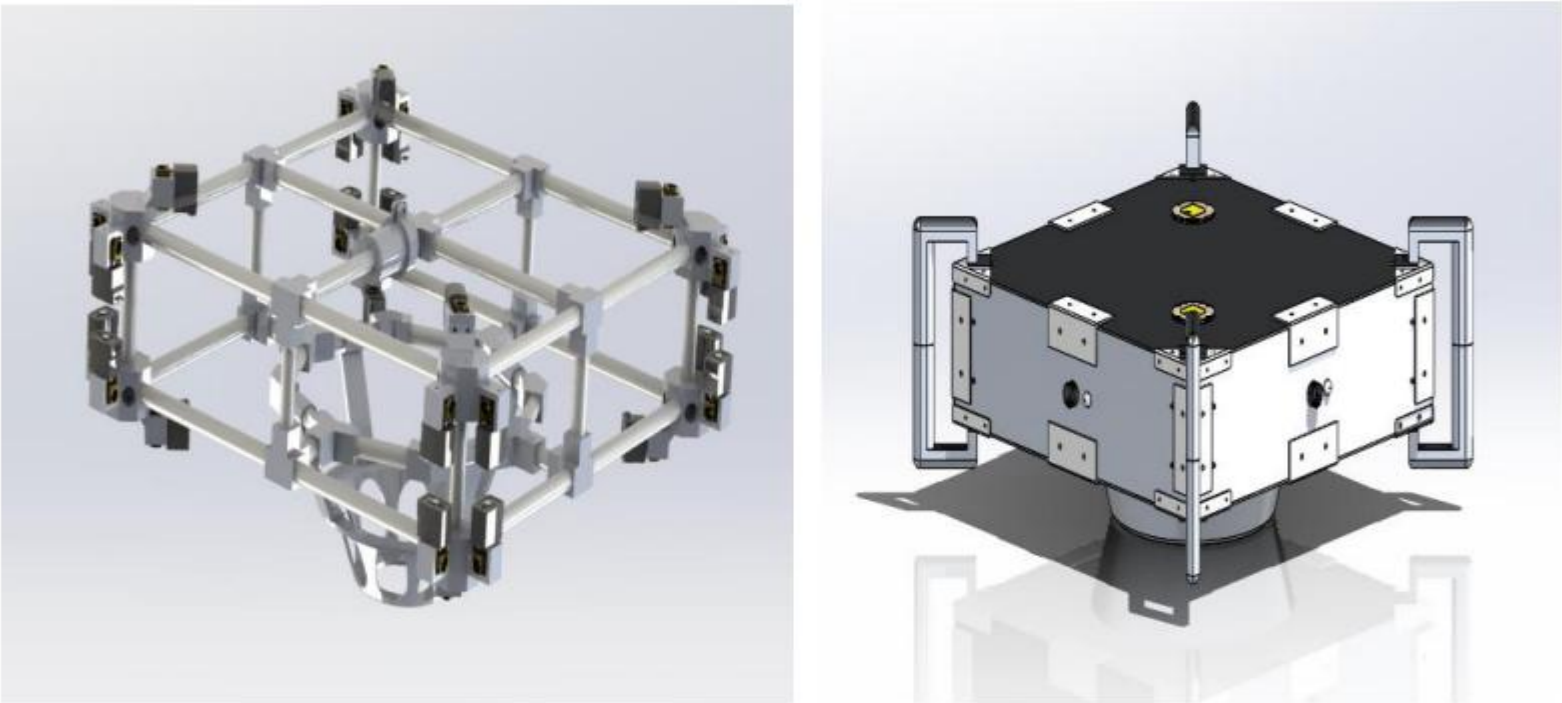

Figure 8: DTO vs DIG Side by Side (Left – DTO, Right – DIG)

CAD Model

- Docking Ports will also need to be made
  - Include alignment guides
  - Include docking target
- Docking ports will mount to a PVC pipe via
- All drones will “dock” using magnets

CAD Model

- Docking ports will mount to a PVC pipe via

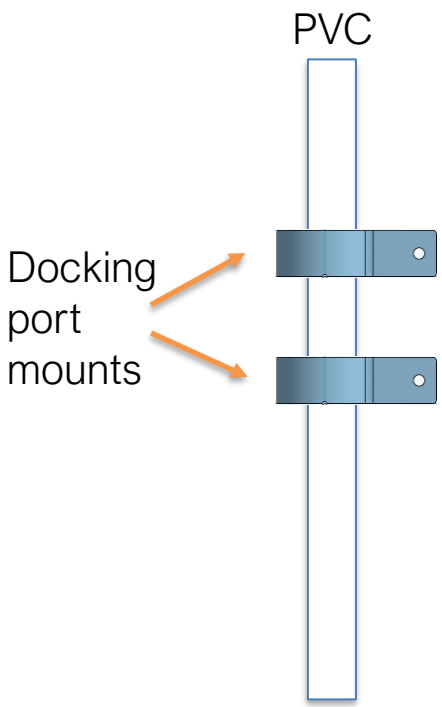

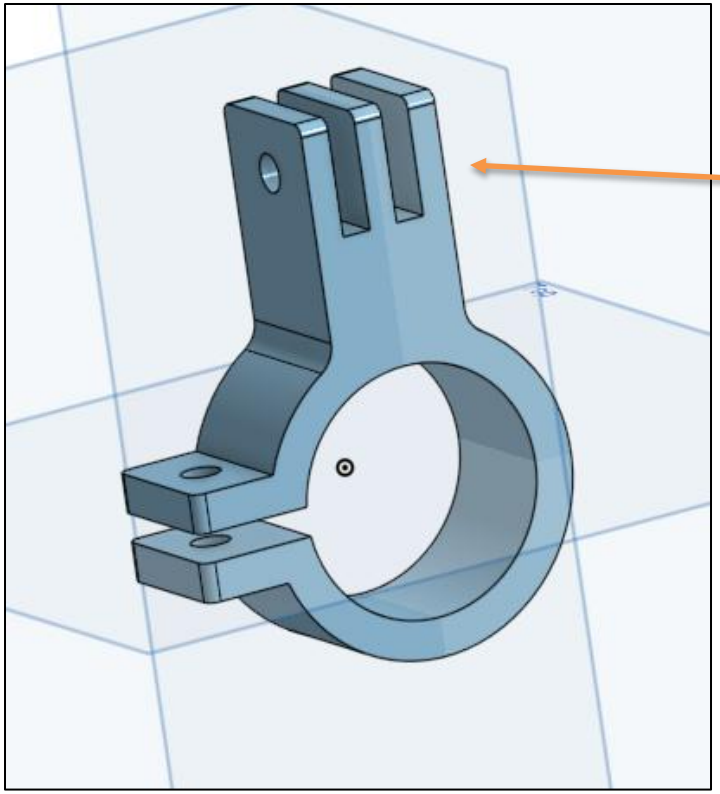

You must create a matching interface on the back of your docking port

Two of these will be available and their vertical distance can be adjusted

CAD model available in Canvas

CAD Model

- Docking motion will be horizontal

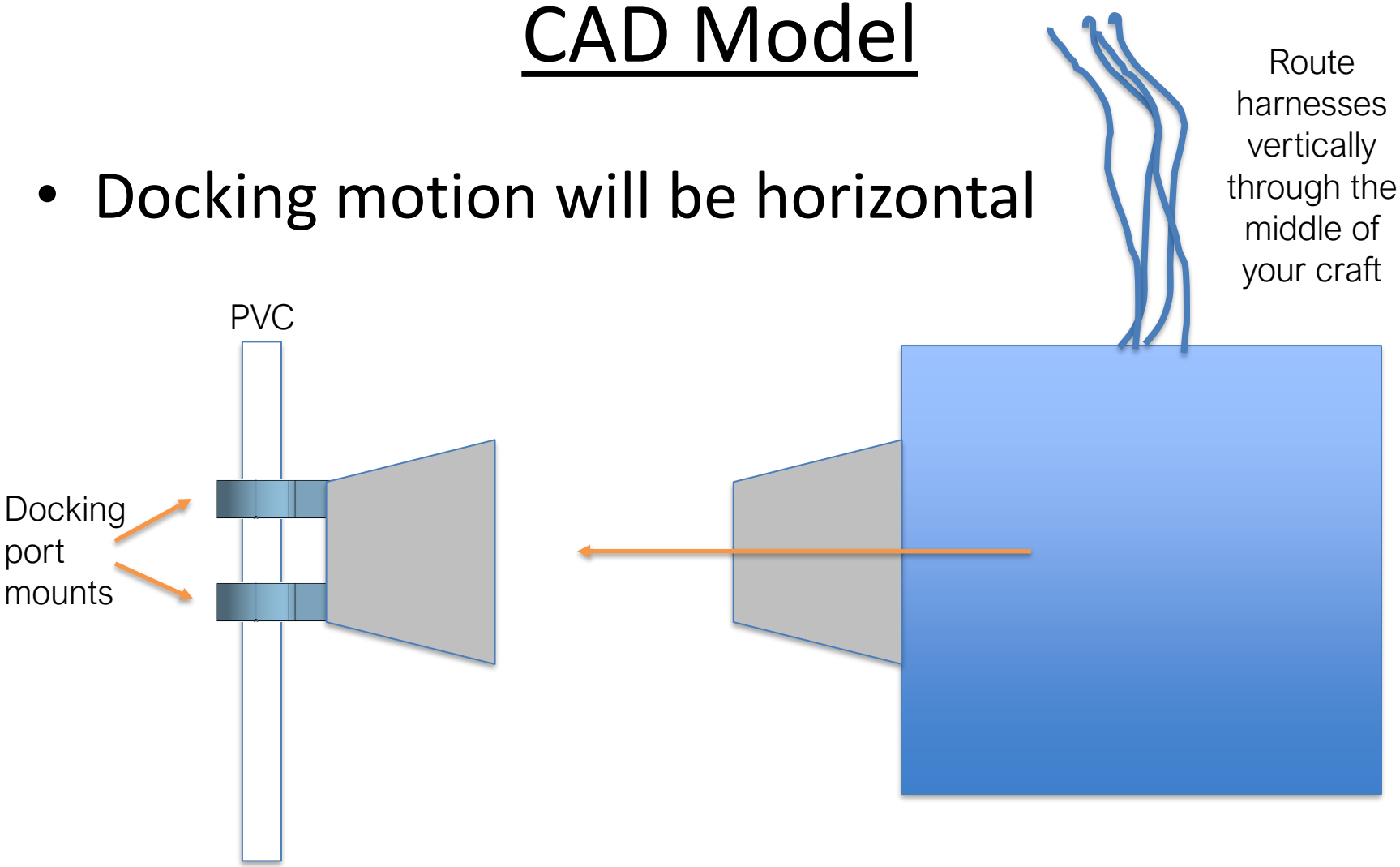

CAD Model

- Solenoid/Thruster CAD model
  - Available in Canvas within Files/DTO Build Resources
- PVC parts are typically ordered from McMaster-Carr
- Many CAD Models already available
  - Not for the drone mounted “fish” camera
  - PVC Corner, T’s, etc.
  - Standard-Wall PVC Pipe Fitting for Water, Side-Outlet Elbow Connector, 1/2 Socket-Connect Female | McMaster-Carr
- Other CAD models may be available for other components
- Magnets
  - https://www.mcmaster.com/5862K107/

Standard Ordering Sources

- McMaster-Carr
  - https://www.mcmaster.com/
- Grainger
  - https://www.grainger.com/
- Amazon
  - Only if not available on the other two above

Things to worry about

- Drag in the water
- Buoyancy and balance (where is your cg?)
- Tending the cables
- You WILL need to create your Solenoid Jumper Harnesses
  - Main cable to “thrusters” power distribution harnesses
  - New type of cable being used
- Keeping track of wiring from command, to Pi, thru power switches, to full cable length, to each specific solenoid valve
  - Find a way to label so you know which wire and power switch is for which thruster
  - Some color tags are available to help

DTO Build Homework

Note
If you complete this early, let me know and you can start your builds earlier

- 1st - DTO Units/Report, **Due NLT** Monday, March 2nd by 8am
  - Design your DTO units
  - Document in a report
    - Reference "DTO Unit Readiness Report to Order and Start Build_spring 2026" document for full details.
    - Located on Canvas in Files/DTO Build Resources

- 2nd - Meet with me (as a team) during week of March 2nd
  - Meeting options on the next slide
  - Present to me a summary of the report in no more than 10 min (+ 10 min Q&A)
    - All team members must be present, but actual presentation may be from just 1 person, all of you, etc.
  - All must be available to answer questions on their parts
    - I will interrupt if needed.
  - Will not be allowed to purchase materials until you have done this and gotten ok from me
  - May (most likely) need to make corrections after first meeting
    - Typically, something is wrong, and you need to correct and rediscuss with me before given the ok to purchase materials.

DTO Presentation Options

Held in the pool room (0316)

Date/Time	Date/Time
Tues, March 3rd: 11:00 – 11:30	Thurs, March 5th: 11:00 – 11:30
Tues, March 3rd: 11:30 – 12:00	Thurs, March 5th: 11:30 – 12:00
Tues, March 3rd: 12:00 – 12:30	Thurs, March 5th: 12:00 – 12:30
Tues, March 3rd: 12:30 – 01:00	Thurs, March 5th: 12:30 – 01:00
Tues, March 3rd: 01:00 – 01:30	Thurs, March 5th: 01:00 – 01:30
Tues, March 3rd: 01:30 – 02:00	Thurs, March 5th: 01:30 – 02:00
Tues, March 3rd: 02:00 – 02:30	Thurs, March 5th: 02:00 – 02:30
Tues, March 3rd: 02:30 – 03:00	Thurs, March 5th: 02:30 – 03:00
Tues, March 3rd: 03:00 – 03:30	Thurs, March 5th: 03:00 – 03:30
Tues, March 3rd: 03:30 – 04:00	Thurs, March 5th: 03:30 – 04:00

Some Equipment Data Sheet Sources

- Let me know if something is missing, and if you would like the purchase location info.

- Raspberry Pi 5
  - https://www.adafruit.com/product/5812
- Mini Pushbutton Power Switch
  - https://www.pololu.com/product/2809/specs
- Solenoid valves
  - https://www.electricsolenoidvalves.com/1-4-12v-dc-electric-brass-solenoid-valve/
- Two pin waterproof connectors
  - https://www.amazon.com/dp/B01LCV8DXQ?ref_=pe_1815430_211938580
- 8-Pin, Pin side connector (male)
  - https://www.mouser.com/ProductDetail/souriau/uts1gjc128p/?qs=gjHRuiJX3UYavAmbgytN1A%3D%3D&countrycode=US&currencycode=USD
- Pins (male)
  - https://www.mouser.com/ProductDetail/souriau/rm20m12k/?qs=TAV84hLEf50oZ3JfjrCd0g%3D%3D&countrycode=US&currencycode=USD

Electronic Meeting After Lecture

- 2 Reps from each team
- Head down to pool room to look thru electronics in more detail:
  - Power switches
  - All cable harnesses
  - Thruster/solenoids with connectors (2 pin)
  - Raspberry Pi and case
  - Cables for Pi
  - Cameras
  - Etc.

Questions?