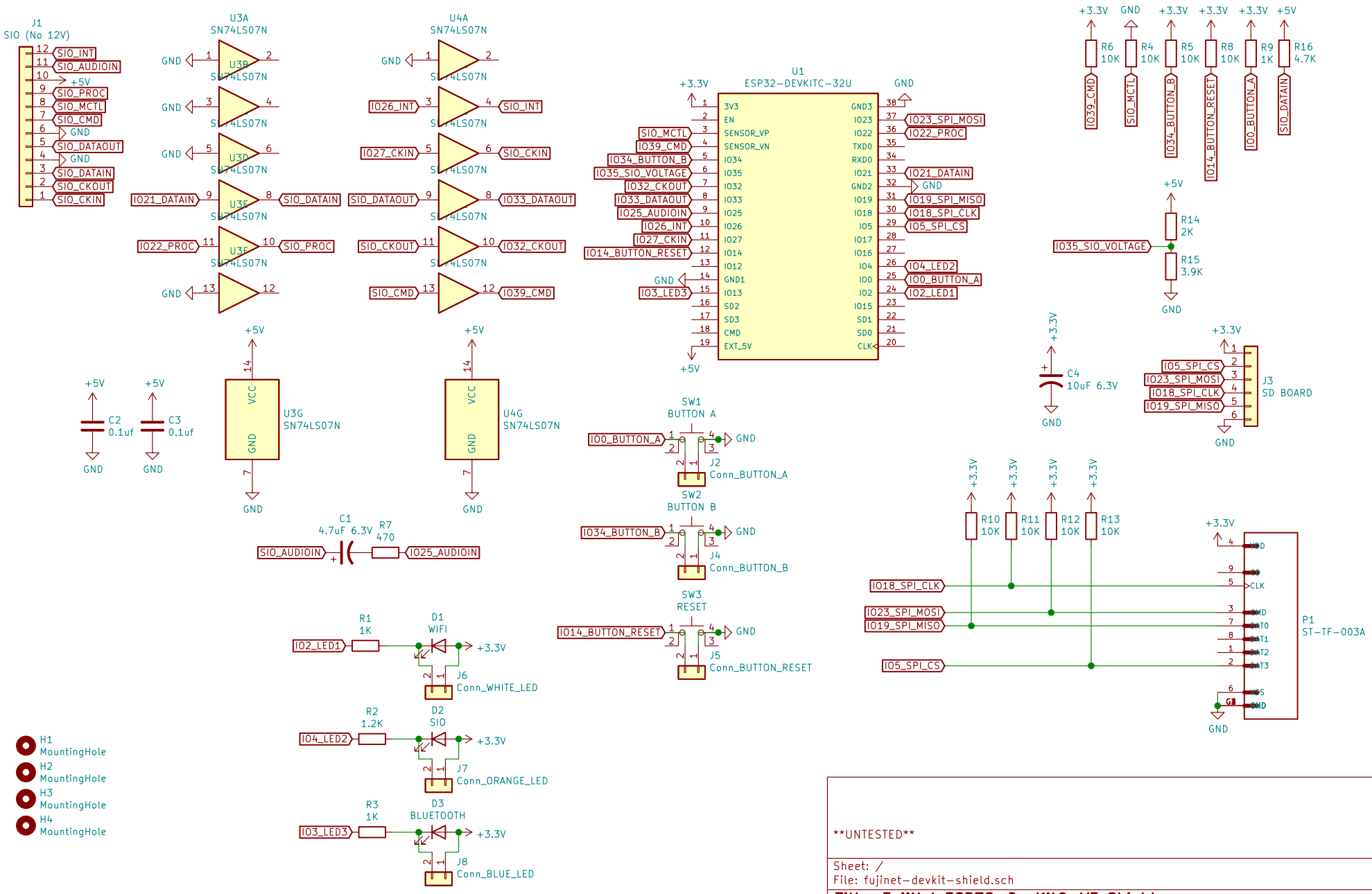

UNTESTED

Sheet: /
File: fujinet-devkit-shield.sch

Title: FujiNet ESP32-DevKitC-VE Shield

Size: A4	Date: 2021-02-11	Rev: 1.0
KiCad E.D.A. kicad (5.1.9)-1		Id: 1/1