cart-rp2354b

RP2354B bus controller, PRG/CHR SRAM, 5V glue, CIClone, 72-pin edge

File: cart-rp2354b.kicad_sch

esp32s3-sd

ESP32-S3 FujiNet core, microSD, status LED

File: esp32s3-sd.kicad_sch

usb-uart

USB-C, CP2102N programming bridge

File: usb-uart.kicad_sch

power

Power: console 5V P-FET / USB VBUS OR, 3.3V buck, RP I/O LDO

File: power.kicad_sch

FujiNet for the Nintendo Entertainment System - Rev0 (RP2354B)

RP2354B (48 GPIO) sits on the 5V cart bus directly through its 5V-tolerant pads: CPU A0-A14, D0-D7, M2, R/W, /ROMSEL, PPU A10-A12 in; /IRQ out; it serves $5000-$7FFF and the reset vectors itself and drives the two AS6C4008 SRAMs' bank lines (PRG A13-A18 = GP33-38, CHR A10-A18 = GP39-47) from PIO lookup tables.
Its IOVDD group runs from a fast LDO (+3V3_RP) so the pads are powered before the console bus is; the core regulator input stays on the buck (+3V3). The SRAMs and the 74HCT glue run on +5V: console 5V through a P-FET (on without USB) ORed with USB VBUS through a Schottky, so their outputs drive the 5V bus at full level.
74HCT595 holds the slow control bits (SRAM_EN PRG_WE_EN CHR_WE_EN MIR0 MIR1 FOURSCREEN LED spare); its /OE is held off for ~140 ms after power-on and whenever the console is off, with 100k pull-downs on every bit.
74HCT253 muxes CIRAM A10 for mirroring and gates CIRAM /CE; PWR_OK (console +5V sense) tri-states both and disables every SRAM output toward the console. PRG /WE = NAND4(M2, ROMSEL, !R/W, PRG_WE_EN) on a 74HCT20: one gate after M2.
ESP32-S3-WROOM-1-N16R8 runs FujiNet (fujiversal-nes) and is the USB host of the RP (CDC, VID 0xCafe);
S3 IO4/IO5 force RP RUN/QSPI_SS so the S3 can re-flash the RP over PICOBOOT.
USB-C: power + CP2102N UART bridge for flashing the S3. microSD on S3 SPI. CIClone (ATtiny13A) on the CIC fingers, DNP until its firmware exists.
Edge: 72 pins, 2.50 mm pitch, 1-36 on the label side, pin 1 at the RIGHT seen from the label side with the fingers down (nesdev Cartridge connector; NES-EWROM-01 geometry). EXP and SYSTEM CLK unconnected.

Generated by tools/gen_sch.py
FujiNet

Sheet: /
File: FujiNet-NES-Rev0.kicad_sch

Title: FujiNet NES Rev0

Size: A3	Date: 2026-10-01	**Rev: 0**
KiCad E.D.A. 10.0.6		Id: 1/5

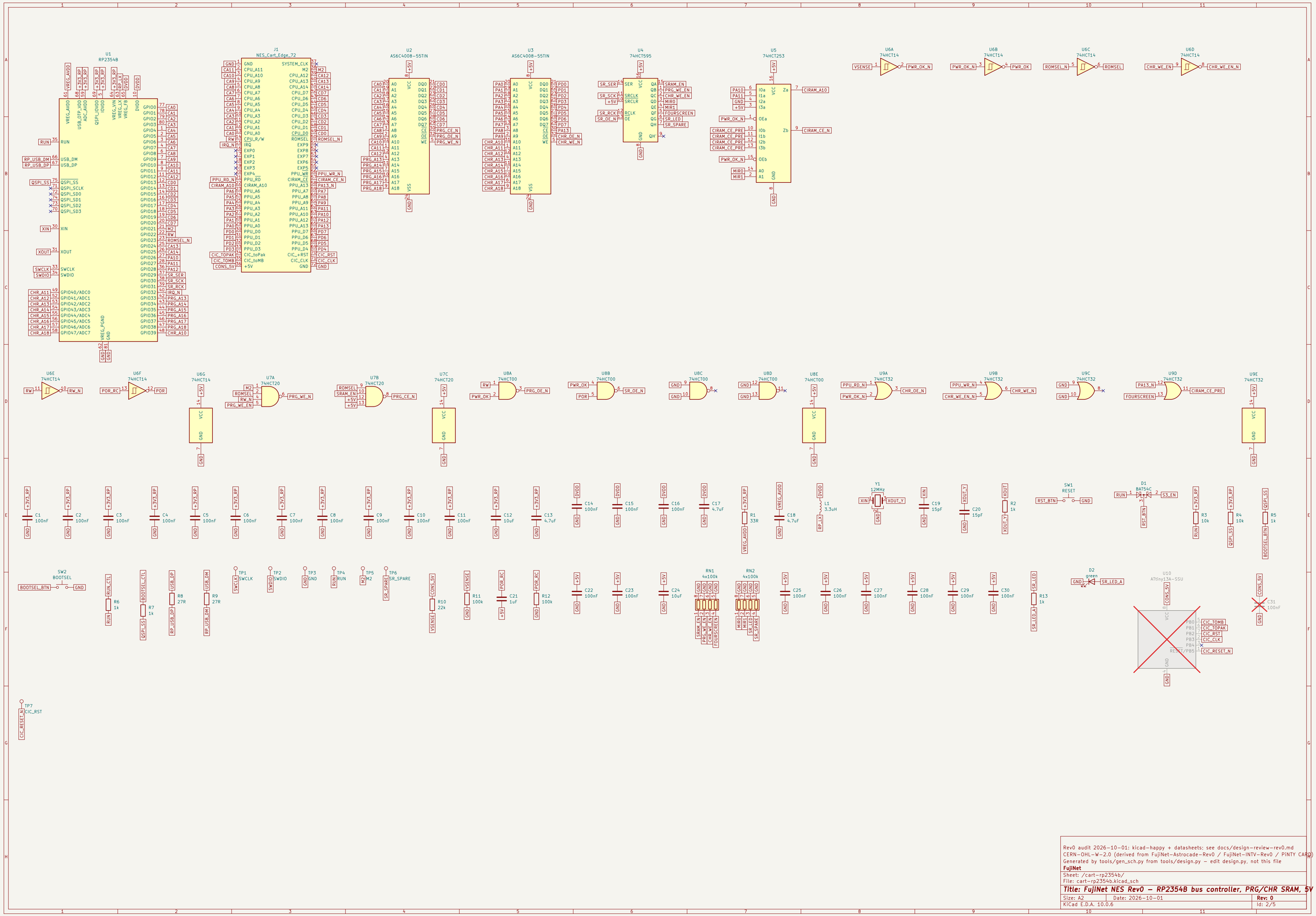

Rev0 audit 2026-10-01: kicad-happy + datasheets; see docs/design-review-rev0.md
CERN-OHL-W-2.0 (derived from FujiNet-Astrocade-Rev0 / FujiNet-INTV-Rev0 / PINTY CART)
Generated by tools/gen_sch.py from tools/design.py — edit design.py, not this file

FujiNet

Sheet: /cart-rp2354b/
File: cart-rp2354b.kicad_sch

Title: FujiNet NES Rev0 — RP2354B bus controller, PRG/CHR SRAM, 5V glue,

Size: A2	Date: 2026-10-01	Rev: 0
KiCad E.D.A. 10.0.6		Id: 2/5

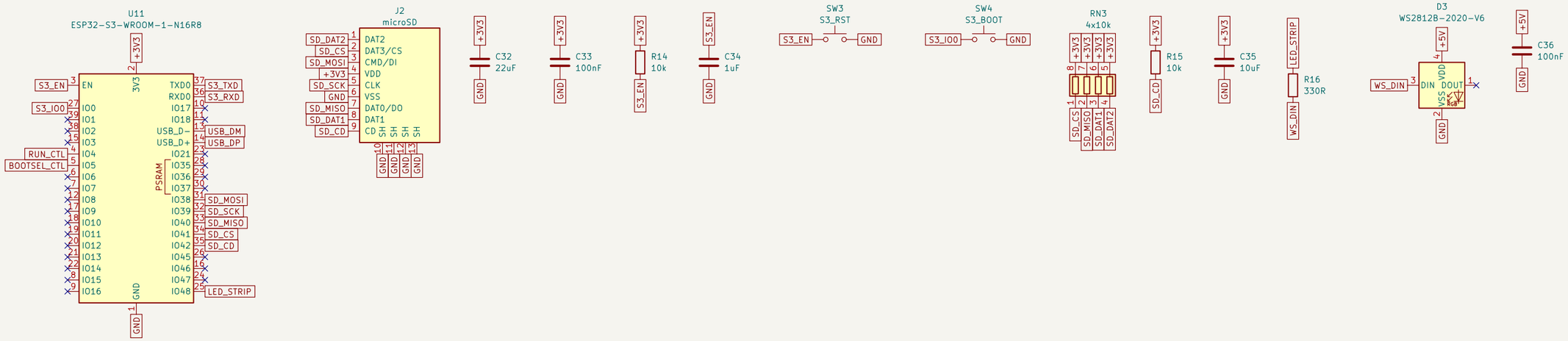

Rev0 audit 2026-10-01: kicad-happy + datasheets; see docs/design-review-rev0.md
CERN-OHL-W-2.0 (derived from FujiNet-Astrocade-Rev0 / FujiNet-INTV-Rev0 / PiNTY CARD)
Generated by tools/gen_sch.py from tools/design.py — edit design.py, not this file

FujiNet

Sheet: /esp32s3-sd/
File: esp32s3-sd.kicad_sch

Title: FujiNet NES Rev0 — ESP32-S3 FujiNet core, microSD, status LED

Size: A3	Date: 2026-10-01	**Rev: 0**
KiCad E.D.A. 10.0.6		Id: 3/5

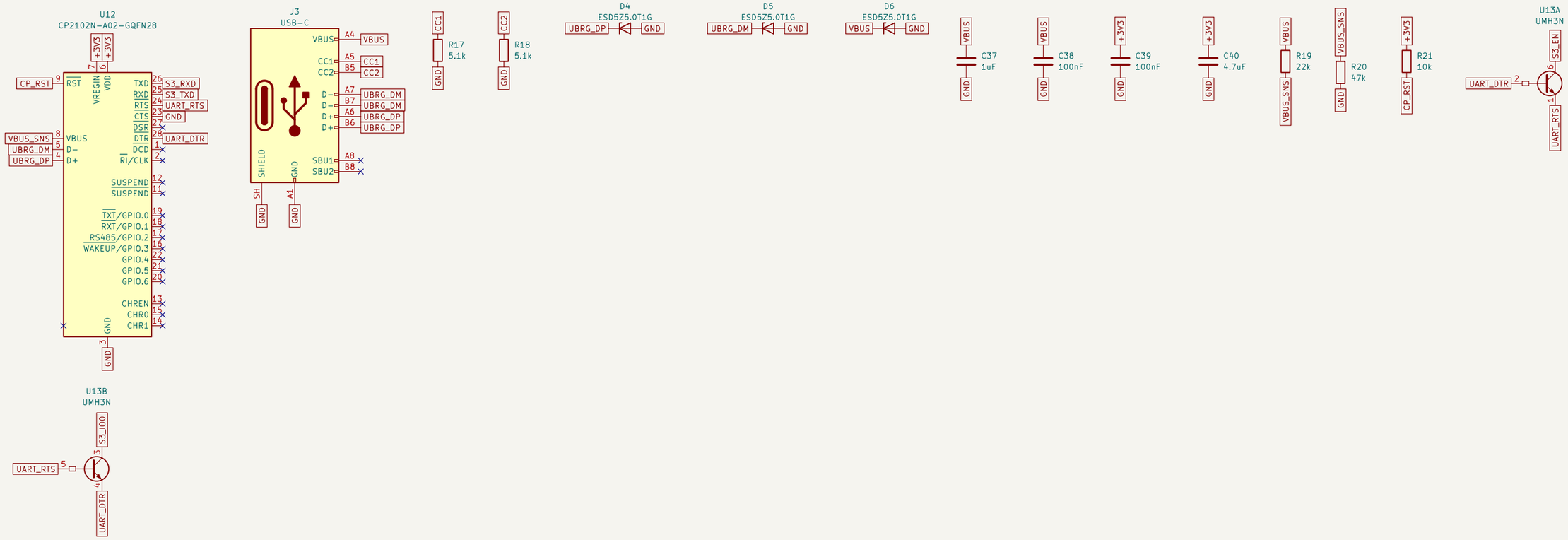

Rev0 audit 2026-10-01: kicad-happy + datasheets; see docs/design-review-rev0.md
CERN-OHL-W-2.0 (derived from FujiNet-Astrocade-Rev0 / FujiNet-INTV-Rev0 / PiNTY CARD)
Generated by tools/gen_sch.py from tools/design.py — edit design.py, not this file

FujiNet

Sheet: /usb-uart/
File: usb-uart.kicad_sch

Title: FujiNet NES Rev0 — USB-C, CP2102N programming bridge

Size: A3	Date: 2026-10-01	**Rev: 0**
KiCad E.D.A. 10.0.6		Id: 4/5

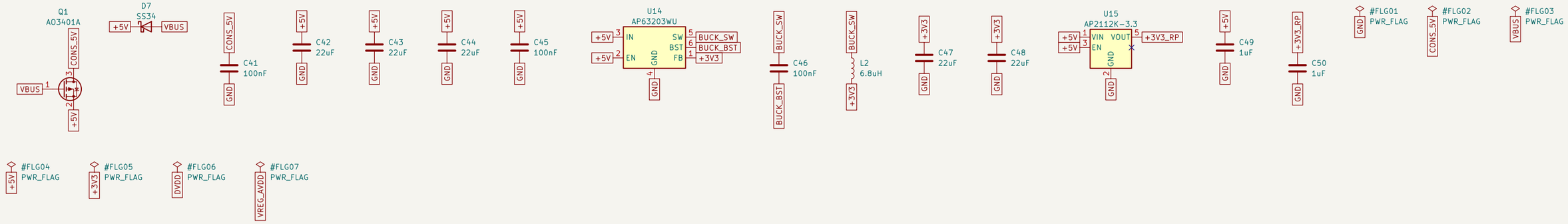

Rev0 audit 2026-10-01: kicad-happy + datasheets; see docs/design-review-rev0.md
CERN-OHL-W-2.0 (derived from FujiNet-Astrocade-Rev0 / FujiNet-INTV-Rev0 / PiNTY CARD)
Generated by tools/gen_sch.py from tools/design.py — edit design.py, not this file

FujiNet

Sheet: /power/
File: power.kicad_sch

Title: FujiNet NES Rev0 — Power: console 5V P-FET / USB VBUS OR, 3.3V b

Size: A3	Date: 2026-10-01	**Rev: 0**
KiCad E.D.A. 10.0.6		Id: 5/5