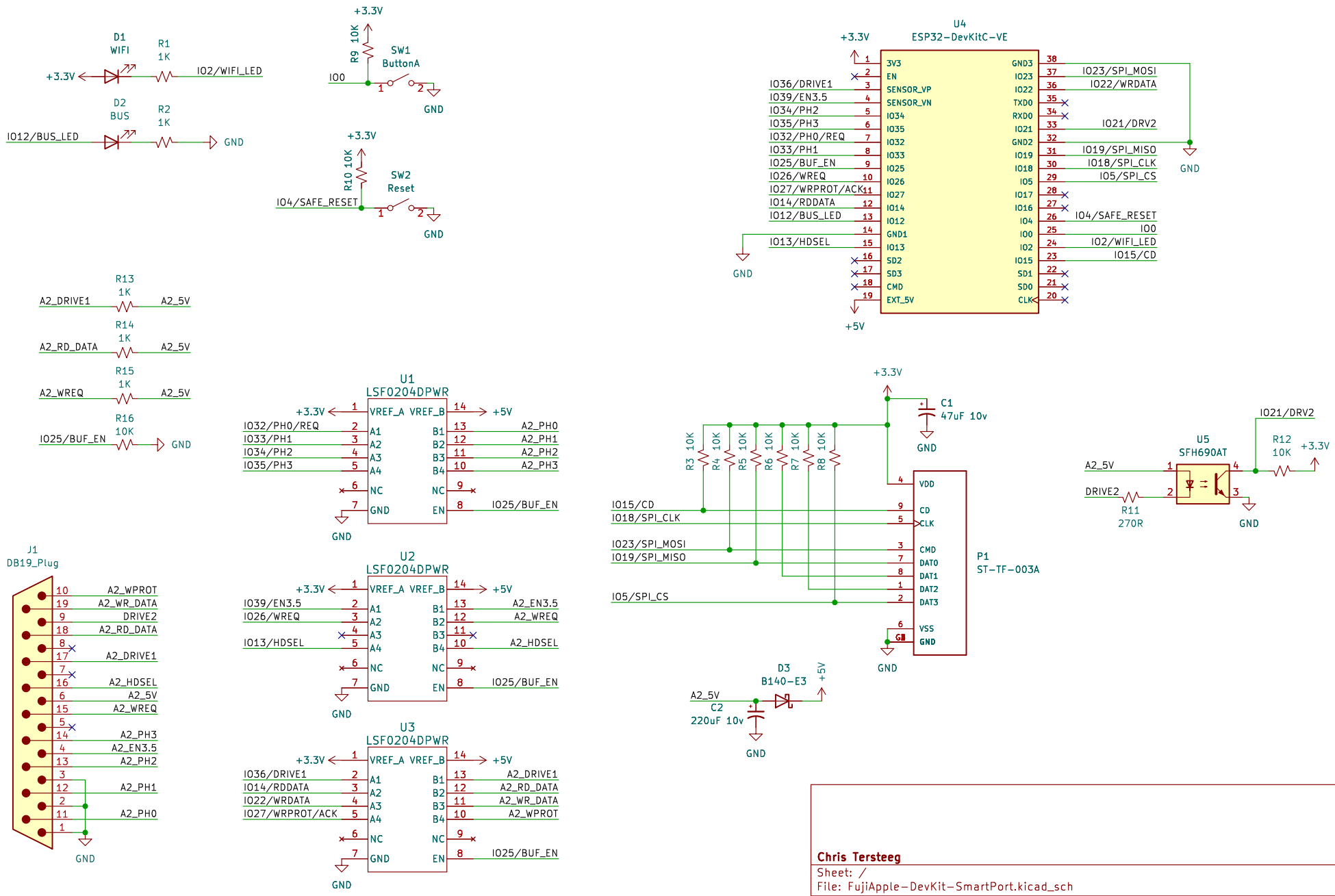

Chris Tersteeg

Sheet: /

File: FujiApple-DevKit-SmartPort.kicad_sch

Title: FujiApple DevKit SmartPort

Size: A4	Date: 2024-01-01	**Rev: v1.0**
KiCad E.D.A. kicad 7.0.11		Id: 1/1