CATALYST

OPERATOR'S MANUAL

20" & 25" MODELS: LC20 / LC25

OPTIONAL ACCESSORIES & CARTRIDGES

INTRODUCTION

READ THIS INFORMATION CAREFULLY TO LEARN HOW TO OPERATE AND MAINTAIN THE PRODUCT PROPERLY AND TO AVOID INJURY AND PRODUCT DAMAGE. IT PROVIDES INSTRUCTIONS AND RECOMENDATIONS FOR THE KEY ASPECTS OF THE PRODUCT. ADDITONAL INSTALLATION, TECHNCIAL SERVICE AND PARTS INFORMATION IS AVAILABLE ON OUR WESBITE: CALTRIMMER.COM OR CONTACT US DIRECTLY FOR ANY QUESTIONS.

The unit's model and serial numbers are located on the decal next to the engine. Write the numbers in the space provided below.

Model Number: _____

Serial Number: _____

You can complete and mail the enclosed product registration forms (California Trimmer and Honda or Briggs & Stratton Engine) or you can register on-line at: caltrimmer.com.

SAFETY & PRECAUTIONS

The following safety alert symbols are used in these instructions and on the unit itself in conjunction with important safety messages related to the operation of the unit and potential hazards. As you familiarize yourself with the various features and functionality of this product, please take note of the subjects and specific instructions / labels that include these alerts:

⚠CAUTION

Unit damage or loss of functionality if the instructions are not followed.

⚠WARNING

CAN cause serious injury if the instructions are not followed.

⚠DANGER

WILL cause serious or fatal injury if the instructions are not followed.

This product may only be used for the tasks it is designed to handle, and any other use is deemed to be a case of misuse. The user/operator, not the manufacturer will be liable for any damage or injuries of any kind caused as a result . It is intended for use in home gardening as well as fine turf sports field environments. The operating instructions as supplied by the manufacturer must be kept and referred to in order to ensure that the lawn mower is properly used and maintained. The instructions contain valuable information on operating, maintenance, and servicing conditions.

⚠WARNING: Due to the high risk of bodily injury to the user, the lawn mower may not be used to trim bushes, hedges or shrubs, to cut scaling vegetation, planted roofs, or balcony-grown grass, or to chop up tree or hedge clippings. Moreover, the lawn mower may not be used as a power cultivator to level out high areas such as molehills. For safety reasons, the lawn mower may not be used as a drive unit for other work tools or toolkits of any kind.

ON-PRODUCT SAFETY LABELS

1. Notice of safety information about hazards that can result in injury.
2. Read the instructions and follow all warning and safety instructions.
3. Be careful to prevent debris from being thrown.
4. Bystanders should always maintain a safe distance during operation.
5. Stop engine and remove spark plug wire before maintenance, and clearing debris.
6. Do not place hands or feet into the cutting unit.
7. Do not touch rotating parts.
8. Do not touch hot surfaces.

UNIT UNPACKING & ASSEMBLY

The unit has been carefully assembled with numerous adjustments and quality inspections. For packaging and shipment, components need to be installed and other aspects need to be inspected and prepared.

⚠WARNING: Exercise care when lifting and handling the mower, as it is of considerable weight.

TOOLS

- Driver with Phillips and Adjustment Bit
- Adjustable & 13mm Ratchetting Wrench
- Special Spanner for Scarifier, Verticutter and Dethatcher Cutter Replacement

Attach the upper handle with the throttle lever on the operator's right using the handle clamps, washers and nuts as shown below. DO NOT **tighten completely and leave sufficient space ensuring that the** handle clamps can be folded downward and locked into place to securely hold the handle.

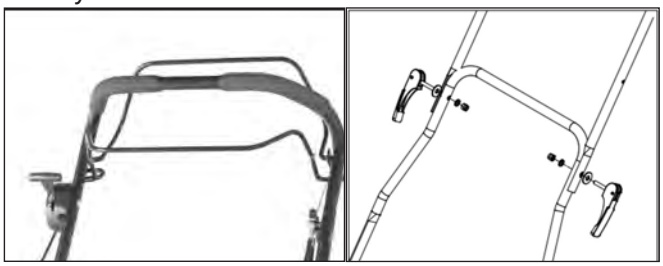

Remove the tie straps from the engagement levers before removing the unit from the pallet. The handle angle position can be adjusted using the mounts at the rear base of the frame.

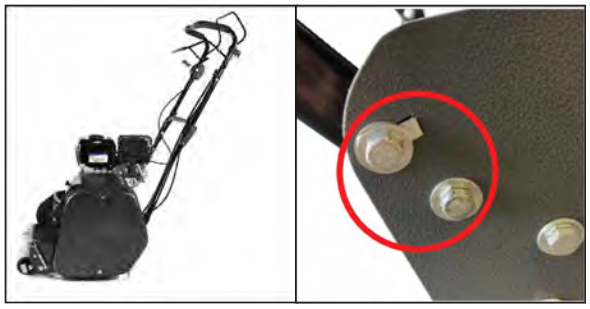

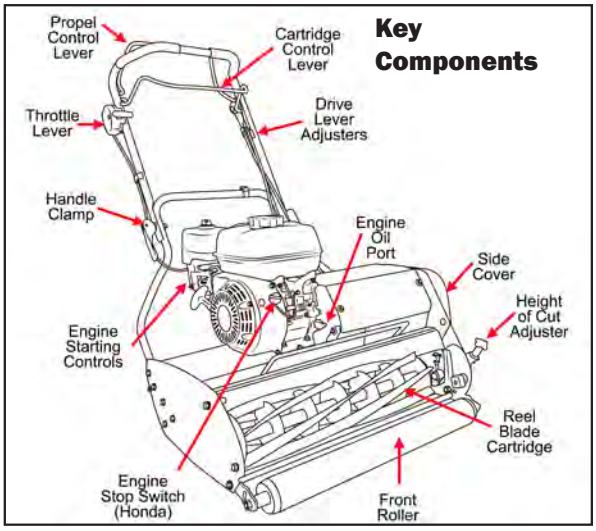

ENGINE PREPARATION

A variety of engines are used on the California Trimmer units and their specific identification is provided as the last part of the overall unit's model number. Example: LC20-GX120 (GX120 is the engine model no). NOTE: REVIEW THE COMPLETE OPERATION AND SAFETY INSTRUCTIONS PROVIDED IN THE OWNER'S MANUAL OF THE RESPECTIVE ENGINE MANUFACTURER – INCLUDED IN THE INFORMATION PACKET OF THIS UNIT. ANY SERVICE, WARRANTY OR REPLACEMENT PART ISSUE FOR THE ENGINE MUST BE DIRECTED TO AUTHORIZED SERVICE DEALERS OF THE RESPECTIVE MANUFACTURER.

ENGINE OIL

⚠CAUTION: The unit is shipped with the oil drained out. Running the engine without the correct oil to the required level will result in damage. Automotive grade 10W30 is suitable for normal use.

Check and fill the engine with the correct oil type and volume, the engine typically holds 18-20 oz.(0.53-0.59 l) but the amount should be verified at the filler port as shown in the image below - when the unit is sitting completely level. NOTE: **The rear oil filler port & drain are** duplicate and not normally used for this application.

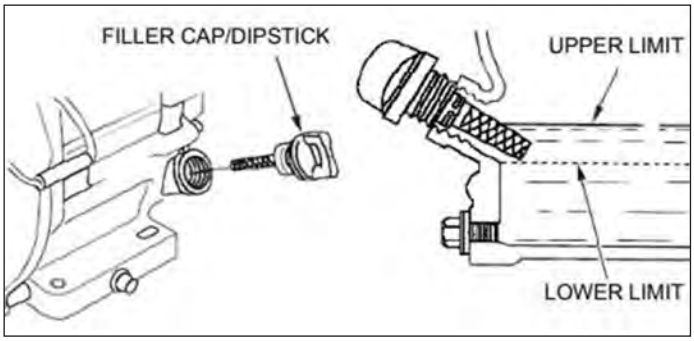

ENGINE FUEL

The engine can operate on unleaded gasoline with a pump octane rating of 87 or higher containing no more than 10% ethanol (E10) or 5% methanol by volume.

⚠WARNING: Fuel is highly flammable. Store fuel in containers specifically designed for this purpose. Refuel outdoors only and do not smoke while refuelling; add fuel before starting the engine. Never remove the cap of the fuel tank or add fuel while the engine is running or when the engine is hot. If fuel is spilled, do not attempt to start the engine, but move the machine away from the area of spillage and avoid creating any source of ignition until vapors have dissipated. Reinstall all fuel tank and container caps securely.

⚠DANGER: FOR YOUR SAFETY, DO NOT OPERATE THE ENGINE IN AN ENCLOSED AREA SUCH AS A GARAGE OR SHED. THE EXHAUST CONTAINS POISONOUS CARBON MONOXIDE GAS THAT CAN COLLECT RAPIDLY IN AN ENCLOSED AREA AND CAUSE ILLNESS OR DEATH.

OPERATING PRECAUTIONS

1. Always wear substantial footwear and long trousers. Do not operate the equipment when barefoot or wearing sandals.
2. Familiarize yourself with the controls and pay particular attention in learning how to stop the machine in an emergency.
3. Never allow children or people unfamiliar with the instructions to use the machine. Local regulations can restrict the age of the operator.
4. Never operate while people, especially children or pets are nearby.
5. Never use the unit if the operator is taking medicine or substances that could affect or impair their ability to react or concentrate.
6. Keep in mind that the operator or user is responsible for accidents or hazards occurring to other people or their property.
7. The operators must receive proper training in the use, adjustment, and operation of the machine, including prohibited operations.
8. Thoroughly inspect the area where the equipment is to be used and remove all objects, such as stones, toys, sticks, and wires, which can damage or be thrown by the machine.
9. While WEARING GLOVES, slowly and carefully rotate the cartridge (reel blade, scarifier, verticutter, dethatcher, aerator, or brush) to verify it turns freely and to visually inspect for any damage.

ENGINE STARTING & RUNNING

ON/OFF SWITCH

Honda (Front)

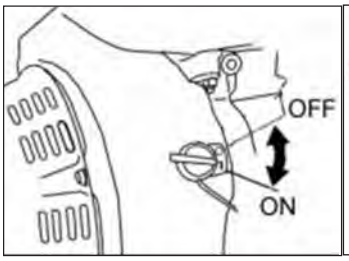

Briggs (Recoil Side)

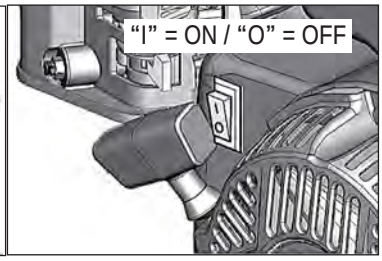

⚠WARNING: Before starting, check that the drive and cutting system is disengaged. With the ignition switch OFF, pull the recoil slowly and if either the unit cartridge and/or rear drum rollers turns, then check the engagement levers, cables and idlers (beneath the left side cover).

FUEL VALVE / CHOKE LEVERS

Move the fuel valve lever (right) to the ON position. For a COLD engine, move the choke lever (left) to the CLOSED position.

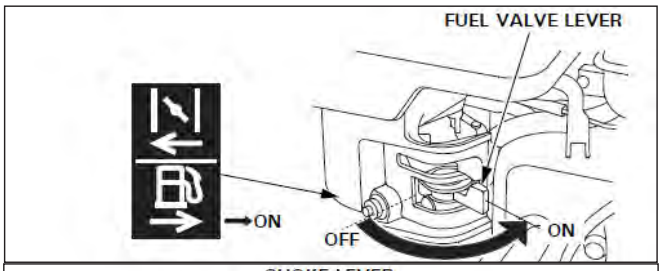

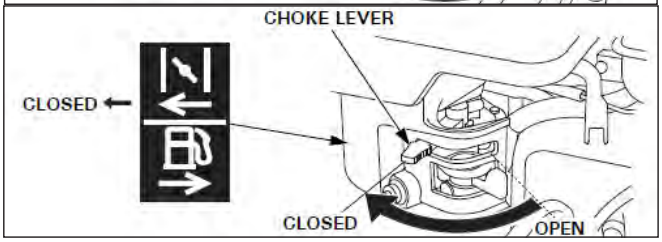

⚠CAUTION: Keep fuel valve CLOSED when the unit is not in use.

UNIT OPERATION

HEIGHT OF CUT ADJUSTMENT

Lean the unit backwards slightly then rotate the knob CLOCKWISE TO RAISE and COUNTER-CLOCKWISE TO LOWER the height of cut. NOTE: The height level indications on the label are approximate.

CATCHER

⚠DANGER: Turn the engine off before installing or removing the catcher. It is installed by holding the top and inserting the bottom section hooks on to the locating pegs (A), the catcher then sits on the rubber stops (B) either side of the chassis. The stops also rotate to adjust the angle of the catcher

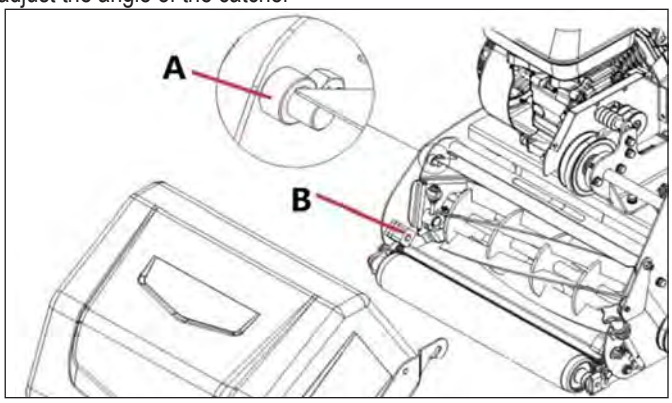

CONTROL LEVERS

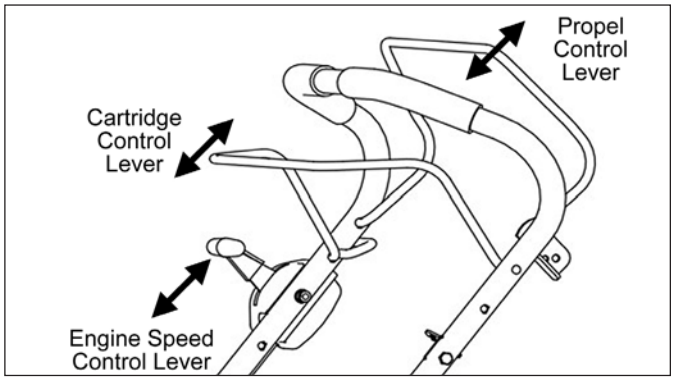

⚠WARNING: The blade and drive will not stop immediately. In the case of an EMERGENCY STOP, release both the cartridge and propel control levers. The engine will continue to run but the drive movement will stop.

UNIT OPERATION

CONTROL LEVERS

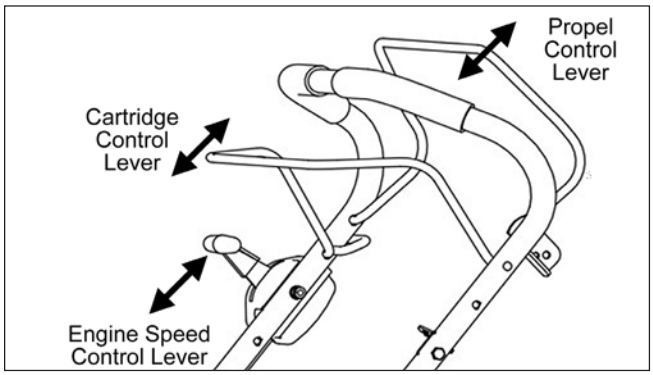

TIPS FOR PROPEL CONTROL: It is recommended to begin by setting the engine speed low to become familiar with moving the control lever and the corresponding acceleration and walking speed. This process will take some time to become more accustom to and the drive belt will also break-in to allow for more gradual acceleration. Once moving, use the throttle lever to increase the engine speed for a faster walking pace. NOTE: it is recommended to operate the unit as close to the maximum engine speed as possible to maintain the performance of the various cartridges used.

For a planned stop:

1. Slow the engine speed by moving the throttle lever to the 'SLOW' position.
2. Release the propel control lever gradually which will allow the unit to slow down to a stop.
3. Release the cartridge control lever which will stop its rotation.
4. Turn engine switch and fuel valve lever to 'OFF' position.

⚠WARNING: Avoid loss of control or tipping on slopes and sharp corners by reducing speed. When approaching a sharp turn or repositioning to start a new cutting swath, release the control levers and push slightly downward on the handle to relieve weight off the front and turn mower. Stop the blade when crossing gravel drive, walkways or roads.

⚠WARNING: If striking a foreign object, release the control levers, stop the engine, remove wire from spark plug, and inspect mower for damage. Repair damage before restarting engine. Watch out for traffic when working near roadways. Stay alert for uneven sidewalks, holes in terrain or other hidden hazards when using mower. Never operate mower without guards are in place.

⚠ CAUTION: WHEN USING THE A REEL BLADE CARTRIDGE, IT HAS BEEN PRE-ADJUSTED AND THERE IS SLIGHT CONTACT WITH BED-KNIFE. MOISTURE IN THE GRASS PROVIDES LUBRICATION FOR THE REEL BLADE. ALWAYS DISENGAGE THE CARTRIDGE DRIVE (RELEASE THE LEVER) TO STOP THE REEL BLADE IF NOT CUTTING GRASS FOR AN EXTENDED AMOUNT OF TIME. DO NOT ENGAGE AND ALLOW IT TO ROTATE DRY.

MOWING PATH WIDTH

NOTE: The mower's overall width is considerably wider than the mowing path. One of the ways to monitor it is with the rear drum roller that are same width and position in the frame.

CARTRIDGE REMOVAL

⚠WARNING: Stop the engine before beginning this process. Remove the 2 x screws and the side cover. Move the cartridge drive belt to allow the idler bearings to pivot down - which will loosen the belt enough to be easily removed from the cartridge pulley.

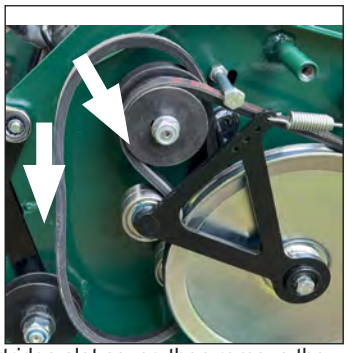

Remove the bolt and the black cartridge slot cover, then remove the cartridge bolt just below it, and on the opposite side of the frame

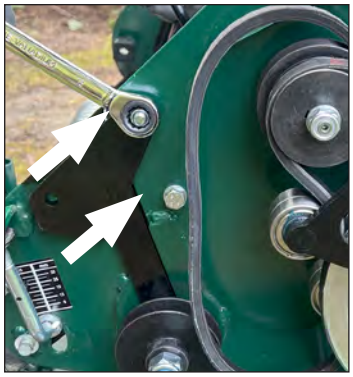

⚠WARNING
The cartridge is heavy. Use BOTH hands to pull it upward and evenly out from the frame. ALWAYS WEAR GLOVES WHEN HANDLING THE CARTRIDGES.

CARTRIDGE INSTALLATION

⚠CAUTION: Carefully place the cartridge into the frame cavity evenly and at the same angle as the other was removed - with the drive shaft inserted into the slot and pulley on the outside. Note the support rails on each side of the inner frame and the locator shaft at the bottom base. Also note the locator points on the outer edges of cartridge as it may need to be tilted slightly up or down to slide down completely and lock into position.

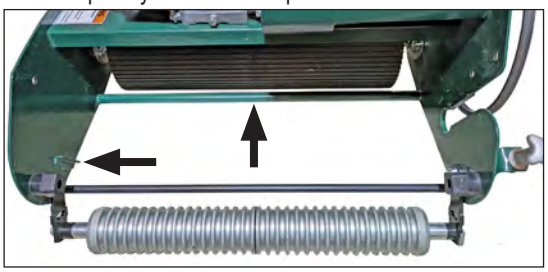

Verify that the cartridge is all the way seated in the frame by looking at the mounting holes. Reinstall the mounting bolts for the cartridge and slot cover

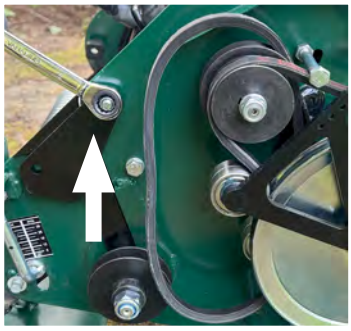

Reinstall the belt on the cartridge pulley and move the idler back into position on the backside of the belt.

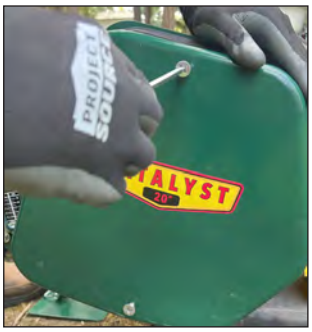

⚠CAUTION: When reinstalling the side cover, take time to align the mounting holes to allow the screws to be threaded in straight and avoid cross-threading damage. Do not over-tighten.

MAINTENANCE

REAR DRUM ROLLERS

⚠CAUTION: The two sections operate normally with just a slight separation (<1/16"), if a wider gap of appears, immediately stop the unit to check, reposition the drum(s) to close the gap, move and re-tighten the collars on each side to hold in place.

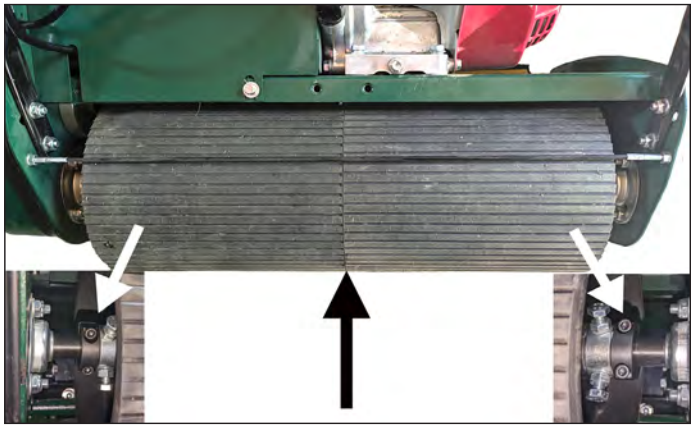

NOTE: The drive system rotates the drums together when moving forward, however they rotate independently when disengaged.

REEL BLADE / BEDKNIFE CONTACT

⚠WARNING: ALWAYS WEAR GLOVES WHEN HANDLING THE CARTRIDGES.

Inspect the blade and bedknife edges for damage or severe wear / rounding. Clean and crisp corner edges provide the best shearing.

The optimum setting is light and smooth contact that shears cleanly and complete across the entire width of the cut.
When adjustments are needed, they must be done with the cartridge removed - using a 1/2" /or 13mm wrench and the special adjuster tip (or a medium flat blade screwdriver). Place the cartridge on a bench or table with wood blocks in front and back to provide support. Make sure there's no weight on the bedknife to ensure an accurate adjustment.

MAINTENANCE

REEL BLADE / BEDKNIFE CONTACT

⚠CAUTION: SETTING THE CONTACT TO TOO TIGHT WILL CAUSE EXCESS FRICTION AND HEAT, EXPANDING THE METAL AND RESULTING IN DAMAGE TO THE BLADE AND BEDKNIFE.

⚠WARNING: KEEP HANDS AWAY FROM THE BLADE EDGES AND CUTTING POINT WHILE MAKING ADJUSTMENTS.

Slightly loosen adjuster screw locking nuts by turning CLOCKWISE and mount locking nuts COUNTER-CLOCKWISE on each side.

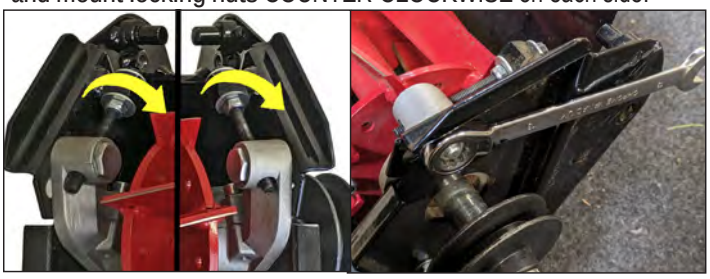

Use the special driver with the adjustment bit to turn the adjusters slightly and alternating between each one: CLOCKWISE to tighten, COUNTER-CLOCKWISE to loosen the contact tightness

While making adjustments, slowly rotate the reel blade by hand using the pulley to listen to the contact and feel the tightness. Confirm the shearing by carefully inserting paper strips at the cutting point. A tapping sound indicates one side is slightly tighter, and it may be necessary to set to no contact and restart the process. When complete, only tighten the outer locking nuts, as the adjuster screw nuts do not need to be re-tightened

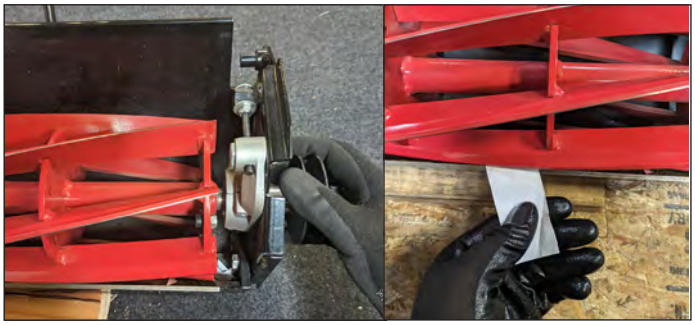

It may be necessary to perform backlapping to fully achieve the light and smooth contact for shearing. Backlapping instructions, kits and supplies are available on the caltrimmer.com website.

DRIVE ADJUSTMENT

⚠WARNING: STOP THE ENGINE BEFORE MAKING ANY ADJUSTMENTS TO THE DRIVE SYSTEM. ALWAYS VERIFY THE LEVERS ALLOW COMPLETE DISENGAGEMENT AND STOPPAGE OF THE PROPEL AND CARTRIDGE.

NOTE: The propel and cartridge are driven by a belt tension system and the optimum engagement of both control levers is to begin at 1/2 travel distance to the handles. As the belts wear, this will change and adjustments will be needed to ensure proper and complete engagement to power the machine. The primary adjusters are located on the handles where the cables connect to the levers. The secondary adjusters are located beneath the top and side belt covers. Unloosen the lock nuts and move the cable position in the mount to affect the amount of travel distance the lever needs for engagement.

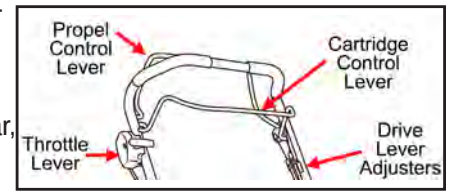

BELT REPLACEMENT

Following are the order numbers for the belts used on this unit...

- **Engine drive (cogged type): C0519**
- **Cartridge drive (v-type): C0501**
- **Rear roller drive (v-type): C0526**

All belts can be quickly and easily replaced. For the main drive belt, remove the cover, the top idler, slide the belt first off the larger front cogged pulley, then remove it from the engine pulley. For the propel and cartridge drive belts, remove the side cover, the outer idler bracket, then both belts can be removed from the pulleys.

Install the belts, then reinstall and reposition the idlers in their original positions. NOTE: Adjustments made to the cables will need to be reset.

LUBRICATION - FRAME/CHASSIS

(For engine instructions, refer to the applicable engine manufacturers' operating manual.)

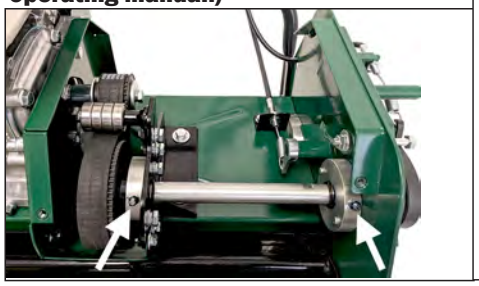

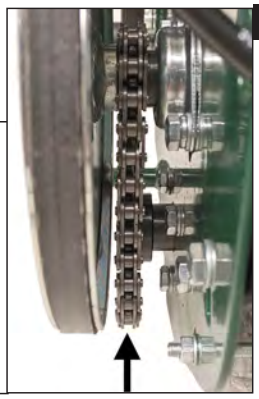

Most bearings used on the machine are sealed and do not require **additional lubrication. However the two grease fittings on each side** of the main drive shaft (under the top cover) must be greased every 20 hours with automotive quality wheel bearing grease. The drum roller drive chain (located under the side cover) must be lubricated with chain lube every 40 hours. The control cables, levers, height **adjuster and all other rotational friciton points will benefit from** periodic lubrication using light oil or a multi-purpose spray lubricant. Avoid spraying wather to clean as it will deminish the effectiveness of lubrication leading to preamutre wear and corrosion.

PARTS & SERVICE SUPPORT

⚠CAUTION: FOR CRITICAL COMPONENTS SUCH AS REEL BLADES, BEDKNIVES, SHAFTS, DRIVE ROLLERS, MOUNTS, SPROCKETS, ADJUSTERS, COVERS, SHIELDS, AND LEVERS, USE ONLY GENUINE CALIFORNIA TRIMMER PARTS.

ADDITIONAL PRODUCT INFORMATION, ACCESSORIES, BRANDED MERCHANDISE, PARTS MANUALS, SERVICE MANUALS AND VIDEOS ARE AVAILABLE AT OUR WEBSITE:CALTRIMMER.COM

FEATURES / SPECIFICATIONS

Engine Options	Briggs & Stratton XR3.5 (20")	
	Honda GX160 (20" & 25")	
Drive Engagement Levers	Separate for Propel & Cartridge	
Engine to Frame Drive	Heavy-Duty Splined Belt / Ball Bearing Supported Shaft	
Rear Drum Propel Drive	Tension Activated V-Belt & Chain / Ball Bearing Idler	
Front Cartridge Drive	Tension Activated V-Belt / Ball Bearing Idler	
Speed Control	Engine Throttle / Adjustable Drive Lever Engagement	
Propel Speed	2.6 - 3.2 mph (4.2 - 5.2 km/h)	
Standard Reel Blade Cartridge	7 or 10-Blade - with Relief Grind	
Cutting Height Range	7-Blade: 0.23 - 1.2 in (6 - 30 mm)	
	10-Blade: 0.12 - 1.2 in (3 - 30 mm)	
Cutting Height Adjustment	Single Twist Knob with Height Indicator Label	
Rear Drum Roller - Configuration	2-Section Split Differential Function	
Rear Drum Roller - Material	Metal with Grooved Vulcanized Rubber Coating	
Unit Length - with Height Adjustment	40 - 42 in (102 - 107 cm)	
Unit Height - with Height Adjustment	38 - 40 in (97 - 102 cm)	
Unit Width	28 in (71 cm)	33 in (84 cm)
Effective Cutting Width	19.75 in (50.2 cm)	24.75 in (62.9 cm)
Standard Front Roller	Smooth or Split Grooved	
Unit Weight - 7-Blade Cartridge Smooth Front Roller, No Catcher	Briggs - 183 lbs. (83 kg)	Honda - 218 lbs. (99 kg)
	Honda - 187 lbs. (85 kg)	
Grass Catcher Capacity	20 gal (75 l)	24 gal (90 l)
Grass Catcher Dry Weight	11 lbs. (5 kg)	15 lbs. (7 kg)

LIMITED WARRANTY STATEMENT

Evergreen Turf Equipment, LLC hereby warrants California Trimmer Mowers manufactured by it to be free from defects in material or workmanship for a period of two years after purchase for non-commercial / non-rental consumer use. This warranty applies only to non-engine components and functions. The engine warranty coverage is provided by the respective manufacturer and is subject to their specific requirements and conditions. If the product is used in a commercial application, the warranty period shall be one year, and if the product is used in a rental application, the warranty period shall be 90 days after purchase. Commercial under the terms of warranty is defined as use in conjunction with an income producing business or institutional application. Rental under the terms of warranty is defined as use for income producing rentals of the products by multiple end users in either personal or commercial applications. This warranty is limited to repair or replacement by Evergreen Turf Equipment or at the premises of California Trimmer Authorized Service Dealers, of such parts as appear upon inspection, to be defective in material and/or workmanship.

The above warranties are extended only to the first end user, and no warranty is made nor authorized to be made assignable on resale. Evergreen Turf Equipment makes no warranty with respect to replacement parts not manufactured or sold by it. Such parts are subject to the warranty policy of their respective manufacturers. For the name and address of your nearest Authorized Service Dealer, contact Evergreen Turf Equipment at: 1028 4th Street SW, Building A, Auburn WA 98001, (253) 333-3345 or online at http://caltrimmer.com. To obtain performance of any obligation under this warranty for failure during the applicable warranty period, deliver the product, shipping prepaid, to Evergreen Turf Equipment, or to the nearest Authorized Service Dealer. Warranty coverage is conditioned upon the first end user furnishing Evergreen Turf Equipment or its Authorized Service Dealer with adequate written proof of the original purchase date. Evergreen Turf Equipment reserves the right to inspect the claimed defective part(s) to determine if the malfunction is the result of a defect covered by this warranty. This warranty will cover only defects arising under normal usage, and shall not apply, nor will Evergreen Turf Equipment assume any responsibility, if the failure was caused by the following:

1. Operation of product without proper lubrication.
2. Misuse, abuse, or negligence.
3. Accident or physical damage.
4. Repairs made by unauthorized parties and/or with unauthorized parts.
5. Improper unit set up or altered components.
6. Improper adjustments i.e. blades, drive system, belts, levers, cables, etc.
7. Operation of engine at speeds above the manufacturer's recommendations.
8. Failure to operate or maintain the unit in the manner specified by the owner's manual.

Inspection, service, and adjustments to normal maintenance items such as grease fittings, blades, drive chains, belts, engagement levers, etc. are not considered the responsibility of Evergreen Turf Equipment under this warranty.

THIS LIMITED WARRANTY IS IN LIEU OF ALL OTHER EXPRESS WARRANTIES, OBLIGATIONS, OR LIABILITIES. ANY IMPLIED WARRANTIES, OBLIGATIONS, OR LIABILITIES INCLUDING, BUT NOT LIMITED TO, ANY IMPLIED WARRANTY OF MERCHANTABILITY OR FITNESS FOR A PARTICULAR PURPOSE SHALL BE LIMITED IN DURATION TO THE APPLICABLE WARRANTY PERIOD FOR THE FIRST END USER (TWO YEARS FOR NONCOMMERCIAL/ RENTAL USE; 1 YEAR FOR COMMERCIAL USE; 090-DAYS FOR RENTAL USE). ANY ACTION FOR BREACH OF ANY WARRANTY HEREUNDER INCLUDING, BUT NOT LIMITED TO, ANY IMPLIED WARRANTY OF MERCHANTABILITY OR FITNESS FOR A PARTICULAR PURPOSE MUST BE BROUGHT WITHIN A PERIOD OF SIX MONTHS FROM THE END OF THE APPLICABLE WARRANTY PERIOD.
Some states do not allow limitations on how long an implied warranty lasts, so the previously stated limitations may not apply to you. No agent, representative, dealer, or employee of Evergreen Turf Equipment has the authority to increase or alter the obligations of this warranty.

IF THE PRODUCT IS USED PRIMARILY IN A COMMERCIAL OR RENTAL APPLICATION, EVERGREEN TURF EQUIPMENT WILL NOT BE LIABLE FOR GENERAL DAMAGES INCLUDING BODILY INJURIES, EXCEPT AS SET FORTH ABOVE, OR FOR INCIDENTAL OR CONSEQUENTIAL DAMAGES INCLUDING, BUT NOT LIMITED TO, LOSS OF USE, LOSS OF PROFITS, LOSS OF PRODUCTION, EXPENSE OF SUBSTITUTE EQUIPMENT OR OTHER COMMERCIAL LOSS OR DAMAGE. THE SAME LIMITATIONS SHALL APPLY TO A PRODUCT USED FOR CONSUMER PURPOSES WITH RESPECT TO ALL NONPERSONAL INJURY, GENERAL INCIDENTAL AND CONSEQUENTIAL DAMAGES.
Some states do not allow the exclusion or limitation of incidental of consequential damages, so the above limitation or exclusion may not apply to you. This warranty gives you specific legal rights, and you may also have other rights which vary from state to state.