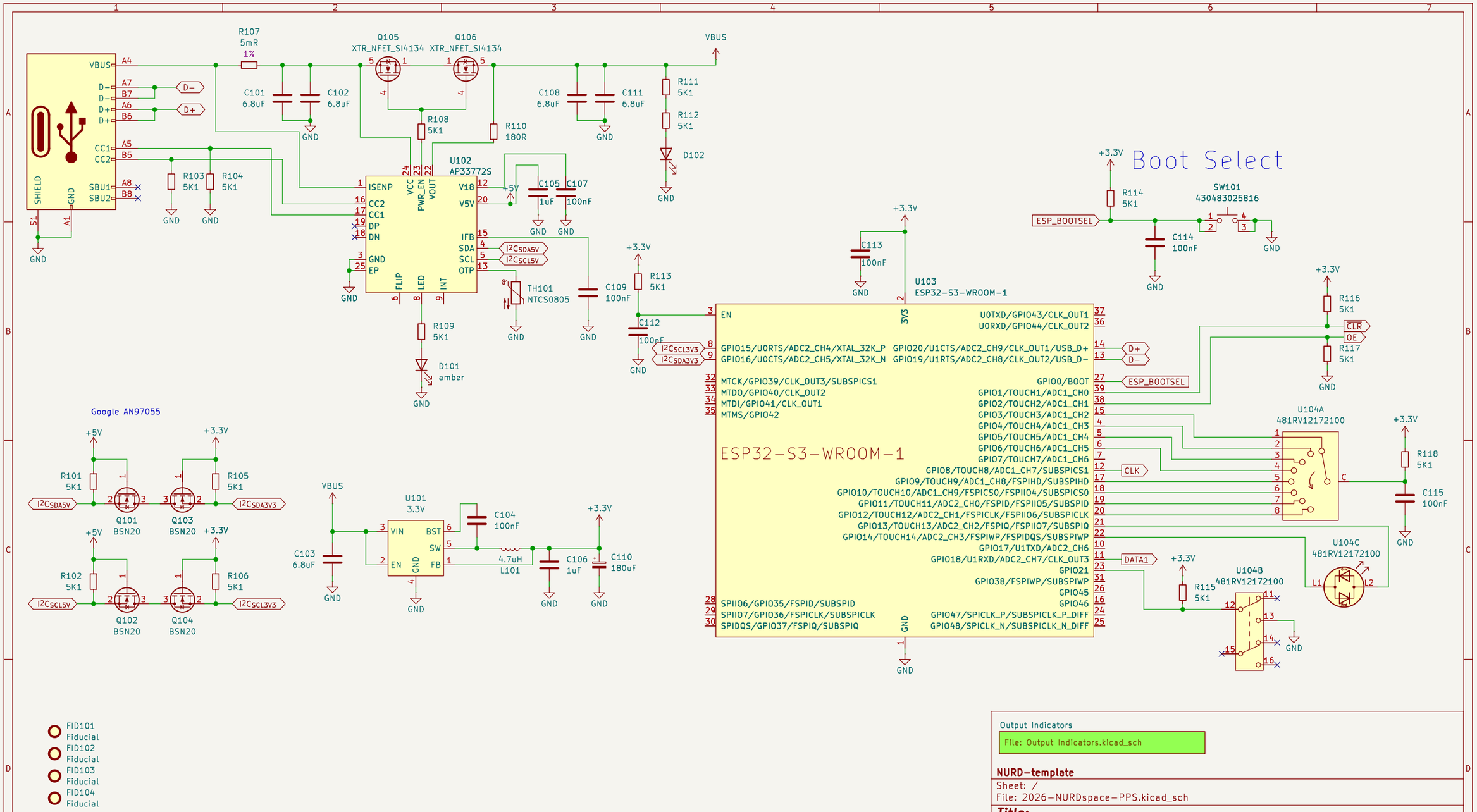
Boot Select
U102
AP33772S
U103
ESP32-S3-WROOM-1
ESP32-S3-WROOM-1
U104A
481RV12172100
U104B
481RV12172100
U104C
481RV12172100
U101
3.3V
Q101
BSN20
Q102
BSN20
Q103
BSN20
Q104
BSN20
Q105
XTR_NFET_SI4134
Q106
XTR_NFET_SI4134
SW101
430483025816
TH101
NTCS0805
D101
amber
D102
Google AN97055
FID101
Fiducial
FID102
Fiducial
FID103
Fiducial
FID104
Fiducial
Output Indicators
File: Output Indicators.kicad_sch
NURD-template
Sheet: /
File: 2026-NURDspace-PPS.kicad_sch
Title:
Size: USLegal
Date:
Rev: V1.0.0
KiCad E.D.A. 9.0.7
Id: 1/2

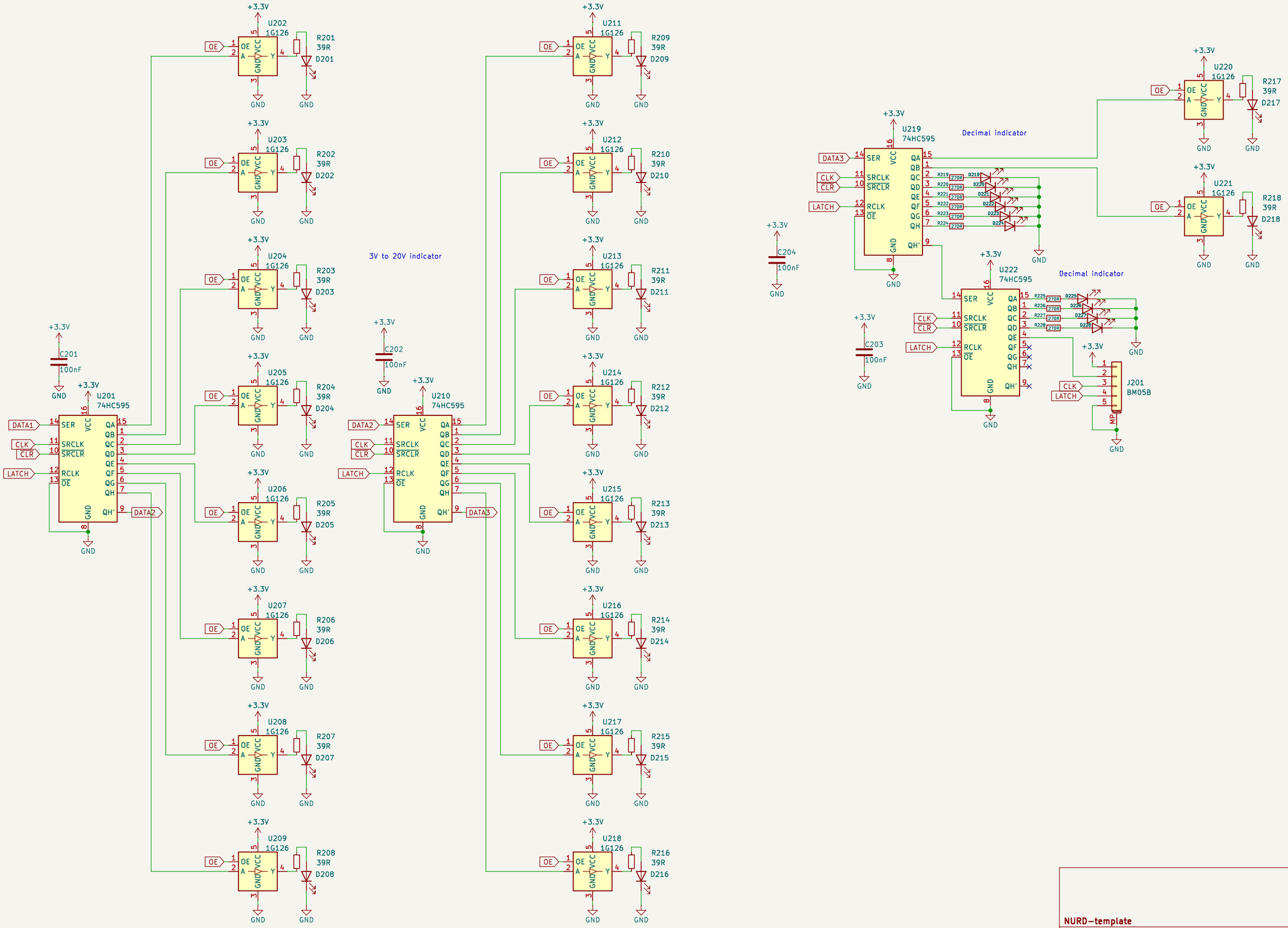

NURD-template

Sheet: /Output Indicators/

File: Output Indicators.kicad_sch

Title:

Size: A3	Date: 2026-04-05	Rev:
KiCad E.D.A. 9.0.7		Id: 2/2