ME464 HW 4

Sunday, March 22, 2026 8:13 PM

ME464 HW 4 (inv(gab...

Paul Martin
Student Name

HW #4: WRITTEN

Box answers and show all work in the space provided. Submit at the start of class on the scheduled due date.

For the following questions, consider the single DOF robot diagram shown in Figure 1.

A weight a magnitude **W** hangs on the end of the robot arm at point r. It hangs straight down regardless of the rotation angle.

The homogeneous transformation, $\mathbf{g}_{ab}(\theta)$, for this single DOF robot is given as:

$$\mathbf{g}_{ab}(\theta) = e^{\hat{\xi}\theta}\mathbf{g}_{ab}(0) = \begin{bmatrix} 0 & 1 & 0 & d_0 \\ -s\theta & 0 & c\theta & d_1 + d_2 c\theta \\ c\theta & 0 & s\theta & d_2 s\theta \\ 0 & 0 & 0 & 1 \end{bmatrix}$$

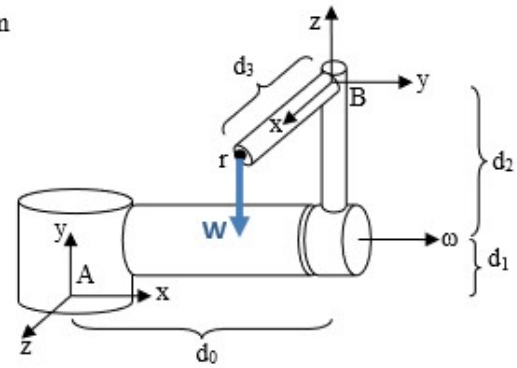

Figure 1. A 1 DOF manipulator in its home position

1) Find the location of the point, $\mathbf{r}_a(\theta)$, relative to inertial frame A as a function of rotation angle.

$$r_b = \begin{bmatrix} d_3 \\ 0 \\ 0 \\ 1 \end{bmatrix}$$

$$r_a(\theta) = g_{ab}(\theta)\, r_b = \begin{bmatrix} 0 & 1 & 0 & d_0 \\ -s\theta & 0 & c\theta & d_1 + d_2 c\theta \\ c\theta & 0 & s\theta & d_2 s\theta \\ 0 & 0 & 0 & 1 \end{bmatrix} \begin{bmatrix} d_3 \\ 0 \\ 0 \\ 1 \end{bmatrix} = \begin{bmatrix} d_0 \\ -d_3 s\theta + d_1 + d_2 c\theta \\ d_3 c\theta + d_2 s\theta \\ 1 \end{bmatrix}$$

2) Find $\mathbf{g}_{ab}^{-1}(\theta)$ using the formula for the inverse of a homogeneous transformation.

$$g_{ab}^{-1}(\theta) = \begin{bmatrix} R^T & -R^T P \\ 0 & 1 \end{bmatrix} \qquad R(\theta) = \begin{bmatrix} 0 & 1 & 0 \\ -s\theta & 0 & c\theta \\ c\theta & 0 & s\theta \end{bmatrix} \Rightarrow R^T = \begin{bmatrix} 0 & -s\theta & c\theta \\ 1 & 0 & 0 \\ 0 & c\theta & s\theta \end{bmatrix} \qquad P(\theta) = \begin{bmatrix} d_0 \\ d_1 + d_2 c\theta \\ d_2 s\theta \end{bmatrix}$$

$$-R^T P = \begin{bmatrix} d_1 s\theta \\ -d_0 \\ -d_1 c\theta - d_2 \end{bmatrix}$$

$$g_{ab}^{-1}(\theta) = \begin{bmatrix} 0 & -s\theta & c\theta & d_1 s\theta \\ 1 & 0 & 0 & -d_0 \\ 0 & c\theta & s\theta & -d_1 c\theta - d_2 \\ 0 & 0 & 0 & 1 \end{bmatrix}$$

3) Find the Adjoint transformation, $\mathrm{Ad}_{\mathbf{g}_{ab}(\theta)}$, and its inverse, $\mathrm{Ad}^{-1}_{\mathbf{g}_{ab}(\theta)}$, of the rigid motion of $\mathbf{g}_{ab}(\theta)$ given above.

$$\hat{p}(\theta) = \begin{bmatrix} 0 & -d_2 s\theta & d_1 + d_2 c\theta \\ d_2 s\theta & 0 & -d_0 \\ -d_1 - d_2 c\theta & d_0 & 0 \end{bmatrix} \rightarrow -R^T\hat{p} = \begin{bmatrix} -d_2 - b_1 c\theta & d_0 c\theta & d_0 s\theta \\ 0 & -d_2 s\theta & d_1 + d_2 c\theta \\ d_1 s\theta & d_0 c\theta & -d_0 c\theta \end{bmatrix}$$

$$Ad^{-1}_{g_{ab}(\theta)} = \begin{bmatrix} R^T & -R^T\hat{p} \\ 0 & R^T \end{bmatrix} = \begin{bmatrix} 0 & -s\theta & c\theta & -d_2 - d_1 c\theta & d_0 c\theta & d_0 s\theta \\ 1 & 0 & 0 & -d_2 s\theta & -d_2 s\theta & d_1 d_2 c\theta \\ 0 & c\theta & s\theta & d_0 c\theta & d_0 c\theta & -d_0 c\theta \\ 0 & 0 & 0 & 0 & -s\theta & c\theta \\ 0 & 0 & 0 & 1 & 0 & 0 \\ 0 & 0 & 0 & 0 & c\theta & s\theta \end{bmatrix}$$

4) Using the definition and inspection, find the spatial wrench, $\mathbf{F}^a(\theta)$, caused by the constant weight force applied at point r.

$$f^a(\theta) = \begin{bmatrix} 0 \\ -w \\ 0 \end{bmatrix} \qquad \tau_a = r_a \times f = \hat{r}_a f$$

$$\tau_a = \begin{bmatrix} 0 & -d_3 c\theta - d_2 s\theta & -d_3 s\theta + d_1 + d_2 s\theta \\ d_3 c\theta + d_2 s\theta & 0 & -d_0 \\ d_3 s\theta - d_1 - d_2 c\theta & d_0 & 0 \end{bmatrix} \begin{bmatrix} 0 \\ -w \\ 0 \end{bmatrix} = \begin{bmatrix} d_3 w c\theta + d_2 w s\theta \\ 0 \\ -d_0 w \end{bmatrix}$$

$$F^a(\theta) = \begin{bmatrix} 0 \\ -w \\ 0 \\ d_2 w c\theta + d_2 w s\theta \\ 0 \\ -d_0 w \end{bmatrix}$$

5) Use the Adjoint operations found in 3) to map the spatial wrench, $\mathbf{F}^a(\theta)$, to the body wrench, $\mathbf{F}^b(\theta)$.

$$F^b(\theta) = Ad^T_{g_{ab}} F^a(\theta)$$

$$= \begin{bmatrix} 0 & -s\theta & c\theta & 0 & 0 & 0 \\ 1 & 0 & 0 & 0 & 0 & 0 \\ 0 & c\theta & s\theta & 0 & 0 & 0 \\ d_1 c\theta + d_2 & -d_0 c\theta & -d_0 s\theta & 0 & -s\theta & c\theta \\ 0 & d_2 s\theta & -d_1 - d_2 c\theta & 1 & 0 & 0 \\ d_1 s\theta & -d_0 s\theta & d_0 c\theta & 0 & c\theta & s\theta \end{bmatrix} \begin{bmatrix} 0 \\ -w \\ 0 \\ d_2 w c\theta + d_2 w s\theta \\ 0 \\ -d_0 w \end{bmatrix} = \begin{bmatrix} w s\theta \\ 0 \\ -w c\theta \\ 0 \\ d_3 w c\theta \\ 0 \end{bmatrix}$$